Catalogo
Interruttori
Switches
Interrupteurs
Schalter

APRIL 2012

APRIL 2012

	page
LEGENDA Sottogruppi * Subgroups LEGENDA	7
LEGENDA Codici ERA * ERA Refs LEGENDA	8
Guida Applicazioni Interruttori Application List Switches Liste d'Applications Interrupteurs Anwendungsliste Schalter	11
Schede Tecniche Interruttori Technical Reports Switches Fiches Techniques Interrupteurs Technische Datenblätter Schalter	477
Tavole Comparative Cross Reference List Tables Comparatives Vergleichstabellen	671

ERA S.p.A. - April 2012

I riferimenti originali e le immagini in questo catalogo sono da considerarsi a puro titolo indicativo.
ERA SpA ha prestato particolare attenzione nella stesura della presente edizione che annulla e sostituisce la precedente.
ERA SpA declina ogni responsabilità per eventuali errori od omissioni relativi a dati ed immagini ivi contenuti.
Inoltre si riserva il diritto di apportare modifiche al catalogo senza obbligo di preavviso.
Per visualizzare gli aggiornamenti si invita la Clientela a consultare il catalogo sul sito www.eranet.it

Original equipment numbers and pictures in this catalogue are used for reference purposes only.
Era SpA has made every effort to ensure that all information within this catalogue is accurate and this edition replaces the previous one.
Era SpA cannot accept any legal liability for any inaccuracies. Furthemore, Era SpA reserves the right to amend the catalogue without notice.
If You want to have a look at the new data we kindly ask you to consult our on-line catalogue as our web-site www.eranet.it

Les références d'origine et les images de ce catalogue doivent être considérées à titre indicatif.
La société ERA SpA a prêté une attention particulière pour la version de cette édition qui annule et remplace la précédente.
ERA SpA décline toute responsabilité pour erreurs éventuelles ou omissions relatives aux informations et images contenues dans ce catalogue. En outre, ERA SpA se réserve le droit d'apporter de modifications au catalogue sans l'obligation de préavis.
Pour visualiser la mise à jour, nous vous prions de consulter le catalogue sur le site www.eranet.it

Alle Originalnummer und Abbildungen in diesem Katalog sind ausschließlich zu Vergleichzwecken bestimmt.
Dieser Katalog wurde von uns nach bestem Wissen erstellt, wobei wir keine Ersatzansprüche aufgrund der fehlerhaften oder ausgelassenen Angaben und Abbildungen anerkennen können.
Diese Ausgabe des Katalogs annulliert und ersetzt alle früheren Ausgaben. Änderungen in Bezug auf die Angaben des Katalogs ohne vorherige Benachrichtigung vorbehalten.
Die neuesten Informationen über unser Sortiment finden Sie in der Online-Version dieses Katalogs unter: www.eranet.it

ERA S.p.A.
Via F. Santi, 15 - Reg. Sanda - Vadò
10024 MONCALIERI (TO) - ITALY
Tel: +39 011 6891511 - Fax: +39 011 6472862
www.eranet.it - era@eranet.it

ERA S.p.A. - April 2012

ERA S.p.A. - April 2012

LEGENDA SOTTOGRUPPI
SUBGROUPS LEGENDA

GRUPPI GROUPS	SOTTOGRUPPI SUBGROUPS	PAGE
OIL PRESSURE SWITCHES **OPS**	Oil Pressure Switch Interruttore a Pressione Olio Pressostat d'huile Öldruckschalter	479
BRAKE LIGHT SWITCHES **BLS**	Brake Light Switch Interruttore Luce Freno Interrupteur des feux de freins Bremslichtschalter	505
TEMPERATURE TRANSMITTERS AND RADIATOR FAN SWITCHES **TT-RF**	Sender Unit, Oil Temperature Sensore Temperatura Olio Capteur, température d'huile Sensor, Öltemperatur	543
	Sender Unit, Coolant Temperature Sensore, Temperatura Refrigerante Sonde de température, liquide de refroidissement Sensor, Kühlmitteltemperatur	545
	Temperature Switch, Coolant Warning Lamp Termocontatto, Spia Segnalazione Refrigerante Contact thermique, voyant avertisseur de l'agent réfrigérant Temperaturschalter, Kühlmittelwarnlampe	593
	Temperature Switch, Radiator Fan Termocontatto, Ventola Radiatore Interrupteur de température, ventilateur de radiateur Temperaturschalter, Kühlerlüfter	595
REVERSE LIGHT SWITCHES **RLS**	Reverse Light Switch Interruttore Luce Retromarcia Interrupteur, feu-marche arrière Schalter, Rückfahrleuchte	625
VARIOUS **VAR**	Pressure Switch, Air Conditioning Interruttore a Pressione Climatizzatore Pressostat, climatisation Druckschalter, Klimaanlage	657
	Sensor, Compressed-Air System Sensore, Imp. Aria Compressa Capteur, système d'air comprimé Sensor, Druckluftanlage	658

LEGENDA Codici ERA
ERA References LEGENDA

ERA	Page
330000	481
330001	481
330002	481
330003	481
330004	482
330005	482
330006	482
330007	482
330008	483
330009	483
330010	484
330011	484
330012	484
330013	484
330014	485
330015	485
330016	485
330017	485
330018	486
330019	486
330020	486
330021	486
330022	487
330023	487
330024	487
330025	487
330026	488
330027	488
330028	488
330029	489
330030	489
330032	507
330033	507
330034	507
330035	507
330036	508
330037	508

ERA	Page
330038	508
330039	508
330040	509
330041	509
330042	509
330043	509
330044	510
330045	510
330046	510
330047	510
330048	511
330049	511
330050	511
330051	511
330052	512
330053	512
330054	512
330055	512
330056	513
330057	513
330058	513
330059	513
330060	514
330061	514
330062	514
330063	514
330064	515
330065	515
330066	515
330067	515
330068	516
330069	516
330070	516
330071	516
330072	517
330073	517
330074	517

ERA	Page
330075	517
330076	518
330077	518
330078	518
330079	518
330080	519
330081	519
330082	545
330083	545
330084	545
330085	545
330086	546
330087	546
330088	546
330089	546
330090	547
330091	547
330092	547
330093	547
330094	548
330095	548
330096	548
330097	548
330098	549
330099	549
330100	549
330101	550
330102	550
330103	550
330104	550
330105	551
330106	551
330107	551
330108	551
330109	552
330110	552
330111	552

ERA	Page
330112	552
330113	553
330114	553
330115	553
330116	554
330117	554
330118	555
330119	555
330120	555
330121	555
330122	556
330123	543
330124	556
330125	556
330126	556
330127	557
330128	557
330129	557
330130	557
330131	558
330132	558
330133	558
330134	558
330135	559
330136	559
330137	543
330138	559
330139	559
330141	560
330142	560
330143	560
330144	560
330145	561
330146	561
330147	561
330148	561
330149	562

ERA	Page
330150	562
330151	562
330152	562
330153	563
330154	563
330155	563
330156	563
330157	564
330158	564
330159	564
330160	564
330161	565
330162	565
330163	565
330164	595
330165	595
330166	595
330167	595
330168	596
330169	596
330170	596
330171	596
330172	597
330173	597
330174	597
330175	597
330176	598
330177	598
330178	598
330179	598
330180	599
330181	599
330182	599
330183	599
330184	600
330185	600
330186	600

ERA	Page
330187	600
330188	601
330189	601
330190	601
330191	601
330192	602
330193	602
330194	602
330195	602
330196	603
330197	603
330198	603
330199	603
330200	604
330201	604
330202	604
330203	604
330204	605
330205	605
330206	605
330207	605
330208	606
330209	606
330210	606
330211	606
330212	607
330213	607
330214	607
330215	607
330216	608
330217	608
330218	608
330219	608
330220	609
330221	609
330222	609
330223	609

ERA	Page
330224	610
330225	610
330226	610
330227	610
330228	611
330229	611
330230	611
330231	611
330232	627
330233	627
330234	627
330235	627
330236	628
330237	628
330238	628
330239	628
330240	629
330241	629
330243	629
330244	630
330246	630
330247	630
330248	631
330249	631
330250	631
330251	631
330252	632
330253	632
330254	632
330255	632
330256	633
330257	633
330258	633
330259	633
330260	634
330261	634
330262	634
330263	634
330264	635
330265	635
330266	612
330267	612
330268	612
330269	612
330270	613
330271	613
330272	613
330273	613
330275	614

ERA	Page
330276	614
330277	614
330278	614
330279	615
330280	615
330281	615
330282	615
330283	616
330284	565
330285	566
330286	566
330287	566
330288	566
330289	567
330290	567
330291	616
330292	616
330293	616
330294	617
330295	617
330296	617
330297	617
330298	618
330299	618
330300	618
330301	618
330302	619
330303	619
330304	619
330305	619
330306	620
330307	567
330308	567
330309	568
330310	620
330311	568
330312	568
330313	568
330314	569
330315	569
330316	543
330317	489
330318	489
330319	490
330320	490
330321	490
330322	490
330323	491
330324	491

ERA	Page
330325	491
330326	491
330327	519
330328	520
330329	520
330332	520
330333	569
330334	569
330335	635
330336	520
330337	492
330338	635
330339	636
330340	492
330341	492
330342	492
330343	636
330344	493
330345	493
330346	521
330347	636
330348	493
330349	493
330350	494
330351	494
330352	494
330354	494
330355	495
330356	495
330358	495
330359	495
330360	496
330361	496
330362	496
330363	496
330364	497
330365	497
330366	497
330367	497
330368	498
330370	498
330371	658
330372	658
330373	658
330374	658
330375	659
330376	659
330377	659
330378	659

ERA	Page
330380	660
330381	660
330382	660
330385	660
330386	661
330387	661
330388	661
330390	661
330391	662
330392	662
330393	662
330395	662
330396	663
330397	663
330398	663
330399	663
330400	664
330401	664
330402	664
330403	664
330404	665
330405	665
330406	665
330407	665
330408	666
330411	666
330412	666
330414	521
330415	521
330416	521
330418	522
330419	522
330420	666
330421	657
330422	667
330426	522
330429	522
330430	523
330431	523
330433	523
330434	523
330435	524
330436	524
330438	524
330439	636
330440	524
330441	637
330442	637
330443	637

ERA	Page
330444	637
330445	638
330446	638
330447	638
330448	638
330453	639
330454	639
330455	639
330456	639
330459	640
330460	640
330461	640
330463	640
330464	641
330466	570
330467	641
330470	667
330471	667
330472	667
330474	641
330475	641
330476	668
330477	570
330482	570
330483	570
330484	571
330485	571
330486	668
330487	668
330488	668
330489	642
330491	525
330492	525
330494	525
330495	571
330496	571
330497	572
330499	669
330501	642
330502	572
330503	525
330504	642
330505	669
330506	669
330508	642
330509	572
330510	526
330511	643
330512	526

ERA	Page
330513	643
330514	526
330515	643
330516	643
330517	526
330518	644
330519	527
330520	527
330521	527
330522	644
330523	527
330525	644
330526	644
330527	572
330528	573
330529	528
330530	573
330531	573
330532	645
330533	645
330534	620
330535	498
330536	573
330537	498
330538	499
330539	499
330541	499
330543	645
330544	645
330545	528
330546	574
330547	528
330548	528
330549	529
330550	574
330551	574
330552	574
330553	575
330554	575
330555	575
330556	593
330557	593
330558	575
330559	576
330560	576
330561	576
330562	576
330563	620
330564	499

ERA	Page
330566	500
330567	500
330568	657
330569	646
330570	646
330571	646
330574	577
330575	593
330576	577
330577	500
330578	501
330579	646
330580	647
330581	577
330582	577
330583	578
330584	578
330585	578
330586	578
330587	579
330588	579
330589	621
330590	647
330591	621
330592	647
330593	647
330594	648
330595	501
330596	529
330597	529
330598	579
330599	621
330600	579
330601	648
330602	648
330603	648
330604	649
330605	580
330606	580
330607	580
330608	580
330609	581
330610	621
330611	649
330612	581
330613	581
330614	581
330615	649
330616	649

ERA	Page
330617	529
330618	530
330619	582
330620	622
330621	530
330622	622
330623	501
330624	582
330625	650
330626	582
330627	650
330628	650
330629	530
330630	501
330631	622
330632	582
330633	622
330634	623
330635	583
330636	583
330637	593
330638	583
330639	583
330640	584
330641	584
330642	584
330643	584
330644	543
330645	594
330646	594
330647	585
330648	585
330650	585
330651	585
330652	586
330653	586
330654	586
330655	586
330656	587
330657	587
330658	587
330659	587
330660	588
330661	588
330662	588
330663	588
330664	589
330665	589
330666	544

ERA	Page
330667	623
330668	623
330669	623
330670	589
330671	589
330672	502
330673	502
330674	624
330675	624
330676	624
330677	590
330678	590
330679	590
330680	590
330681	650
330683	591
330684	502
330685	502
330686	530
330687	544
330688	591
330689	651
330690	503
330691	591
330692	591
330693	592
330695	503
330696	503
330697	503
330698	504
330699	504
330700	504
330701	531
330702	531
330703	531
330704	531
330705	532
330706	532
330707	532
330708	532
330710	533
330711	533
330712	533
330713	533
330714	534
330715	534
330716	534
330717	534
330718	535

ERA	Page
330719	535
330720	535
330721	535
330722	536
330723	536
330724	536
330725	536
330726	537
330727	537
330728	537
330729	537
330730	538
330731	538
330733	538
330734	538
330735	539
330736	539
330737	539
330738	539
330739	540
330740	540
330741	540
330742	592
330743	651
330744	651
330745	651
330746	652
330747	652
330748	652
330749	652
330750	653
330751	653
330752	653
330753	653

ERA	Page

ERA	Page

GUIDA APPLICAZIONI
APPLICATION LIST

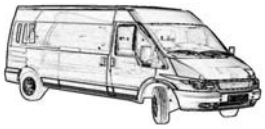
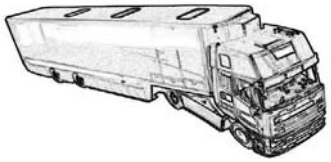

Vehicle		Date (4)	Engine (5)	Kw	OPS	BLS	TT-RF	RLS	VAR
3.0 V6 Zagato		09/88-08/94	AR 61501	152	330317	330049	330292	330347	
ALPINE (1)									
V6 (2)			**01/85 - 03/92** (3)						
2.5 TURBO		01/88-12/90	Z7U	147		330037	330169, 330209	330237	
2.9 GT		01/85-12/90	Z6W	116		330037	330169, 330209	330237	
AUDI									
100			**11/68 - 11/94**						
1.6	(43, C2)	08/76-07/82	YV	63		330414			
	(C1)	01/75-07/76	YM	63		330414			
	Avant (43, C2)	07/77-02/83	YV	63		330414			
1.8	(44, 44Q, C3)	08/82-12/87	DR, RS	55		330038, 330414			
	Avant (44, 44Q, C3)	08/82-12/87	DR, RS	55		330038, 330414			
	(44, 44Q, C3)	02/86-07/88	SH	65		330038			
	Avant (44, 44Q, C3)	02/86-07/90	SH	65	330337, 330342	330038, 330327	330127, 330284, 330285, 330297,	330234	

LEGENDA

1. Costruttore * Manufacturer * Constructeur&Modèle * Hersteller
2. Modello * Model * Modèle * Modellreihe
3. Periodo di fabbricazione (Modello) * Production Year (Model) * Période de fabrication (Modèle)* Baujahr (Modellreihe))
4. Periodo di fabbricazione (Tipo) * Production Year (Type) * Période de fabrication (Type)* Baujahr (Typ)
5. Motore * Engine * Moteur * Motor
6. Codice ERA * ERA p/n * Référence ERA * ERA-Nr.

OPS Oil Pressure Switches **BLS** Brake Light Switches **TT-RF** Temperature Transmitter and Radiator Fan Switches
RLS Reverse Light Switches **VAR** Various

INDICE COSTRUTTORI VEICOLI
VEHICLE MANUFACTURER INDEX

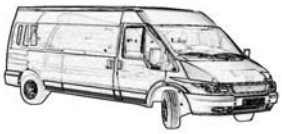
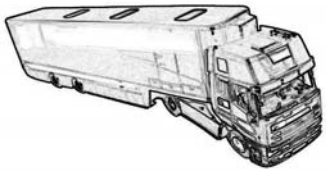

page

ACURA 13
ALFA ROMEO 13
ALPINE 22
AUDI 22
AUSTIN 49
BMW 49
CHEVROLET 66
CHRYSLER 67
CITROËN 67
DACIA 90
DAEWOO 91
DAIHATSU 93
FIAT 94
FORD 117
FORD USA 146
FSO 147
HOLDEN 147
HONDA 147
HYUNDAI 153
INFINITI 160
INNOCENTI 160
ISUZU 161
IVECO 161
JAGUAR 166
JEEP 167
KIA 167
LADA 171
LANCIA 171
LAND ROVER 178
LEXUS 179
MARUTI 180
MAZDA 180
MERCEDES-BENZ 188
MG 218
MINI 219
MITSUBISHI 219
NISSAN 227
OPEL 239
PEUGEOT 272
PIAGGIO 303
PORSCHE 303
PUCH 306
RENAULT 306
RENAULT TRUCKS 336
ROVER 337
SAAB 342
SCANIA 346
SEAT 347
SKODA 361
SMART 369
SSANGYONG 370
SUBARU 371
SUZUKI 372
TALBOT 377
TOYOTA 377
VAUXHALL 393
VOLVO 405
VW 424
ZASTAVA 475

Vehicle		Date	Engine	kW	OPS	BLS	TT-RF	RLS	VAR
ACURA									
INTEGRA		**01/85 - 12/90**							
1.6	Coupe	01/85-12/90	--	74	330007, 330009	330701	330174		
	Hatchback	01/85-12/90	--	74	330007, 330009	330701	330174		
	Saloon	01/85-12/90	D16A3	74	330007, 330009	330701	330174		
1.6 i	Coupe	01/85-12/90	--	88	330007, 330009	330701	330174		
	Hatchback	01/85-12/90	--	88	330007, 330009	330701	330174		
	Saloon	01/85-12/90	--	88	330007, 330009	330701	330174		
LEGEND		**08/91 - 08/96**							
3.2	II Coupe	08/91-08/96	C32A2	151		330701			
NSX		**01/90 -**							
3.0		01/90-08/97	C30A3	201	330006	330701	330095		
	Targa (NA1)	01/95-12/96	C30A3	201		330701			
3.2		08/97-	C32B2	206		330701			
R 3.0		01/92-08/97	C30A4	188		330701			
T 3.0	Targa (NA1)	01/95-12/97	C30A4	188		330701			
VIGOR		**09/91 - 09/94**							
2.5		09/91-09/94	G25A	140		330701			
ALFA ROMEO									
145		**07/94 - 01/01**							
1.4 i.e.	(930)	07/94-12/96	AR 33501	66		330071	330106, 330124, 330205, 330273	330258, 330347	
1.4 i.e. 16V T.S.	(930)	12/96-01/01	AR 33503, AR 38501	76		330064	330121, 330143, 330145	330243	
1.6 i.e.	(930)	10/94-12/96	AR 33201	76		330071	330106, 330107, 330116, 330205, 330273	330258, 330347	
1.6 i.e. 16V T.S.	(930)	12/96-01/01	AR 38201, AR 67601	88		330064	330121, 330143, 330145	330243	
1.7 i.e. 16V	(930)	10/94-12/96	AR 33401	95		330071	330116, 330205, 330273	330258, 330347	
1.8 i.e. 16V	(930)	03/98-01/01	AR 32201	106		330064	330143	330243	
1.8 i.e. 16V T.S.	(930)	12/96-12/98	AR 38401, AR 67106	103		330064	330121, 330145	330243	
1.9 JTD	(930)	02/99-01/01	AR 32302	77		330064	330137, 330143	330260	
1.9 TD	(930)	10/94-02/99	AR 33601, AR 67501	66		330064, 330071	330120, 330205, 330290, 330641	330243	
2.0 16V Quadrifoglio	(930)	03/98-01/01	AR 32301	114		330064	330143	330243	
2.0 16V T.S.	(930)	10/95-01/01	AR 67204	110		330064, 330071	330121, 330145, 330228, 330295	330243	
146		**12/94 - 01/01**							
1.4 i.e.	(930)	12/94-12/96	AR 33501	66		330071	330106, 330124, 330205, 330273	330258, 330347	

OPS Oil Pressure Switches **BLS** Brake Light Switches **TT-RF** Temperature Transmitter and Radiator Fan Switches **RLS** Reverse Light Switches **VAR** Various

Vehicle		Date	Engine	kW	OPS	BLS	TT-RF	RLS	VAR
1.4 i.e. 16V T.S.	(930)	11/96-01/01	AR 33503, AR 38501	76		330064, 330071	330121, 330143, 330145	330243	
1.6 i.e.	(930)	12/94-12/96	AR 33201	76		330071	330106, 330107, 330116, 330205, 330273	330258, 330347	
1.6 i.e. 16V T.S.	(930)	11/96-01/01	AR 38201, AR 67601	88		330064, 330071	330121, 330143, 330145	330243	
1.7 i.e. 16V	(930)	12/94-12/96	AR 33401	95		330071	330116, 330205, 330273	330258, 330347	
1.8 i.e. 16V T.S.	(930)	11/96-01/01	AR 38401, AR 67106	103		330071	330121, 330145	330243	
	(930)	03/98-01/01	AR 32201	106		330064, 330071	330143	330243	
1.9 JTD	(930)	02/99-01/01	AR 32302	77		330064	330137	330260	
1.9 TD	(930)	12/94-02/99	AR 33601, AR 67501	66		330071	330120, 330137, 330205, 330290, 330641	330243	
2.0 16V Quadrifoglio	(930)	03/98-01/01	AR 32301	114		330064, 330071	330143	330243	
2.0 16V T.S.	(930)	10/95-01/01	AR 67204	110		330071	330121, 330145, 330228, 330295	330243	
147			**01/01 -**						
1.6 16V T.SPARK	(937)	01/01-	AR 32104	88		330081, 330517	330495	330243, 330518	
1.6 16V T.SPARK ECO	(937)	01/01-	AR 37203	77		330081, 330517	330142	330243, 330518	
1.9 JTD	(937)	06/03-	182 B9.000	74		330081, 330517	330142	330243, 330518	
	(937)	04/01-	937 A2.000	85		330081, 330517	330142	330260, 330518	
1.9 JTD 16V	(937)	09/03-09/04	937 A4.000	93		330081, 330517	330142	330260, 330518	
	(937)	10/04-	192 B1.000	100		330081, 330517	330142	330260, 330518	
	(937)	11/02-	192 A5.000	103		330081, 330517	330142	330260, 330518	
1.9 JTDM	(937)	10/04-	939 A7.000	85		330517			
1.9 JTDM 16V	(937)	07/05-	937 A5.000	110		330081, 330517	330142	330260, 330518	
	(937)	06/08-	937 A6.000	125		330517			
1.9 JTDM 8V	(937)	07/05-	937 A3.000	88		330081, 330517	330142	330260, 330518	
2.0 16V T.SPARK	(937)	01/01-	AR 32310	110		330081, 330517	330495	330243, 330518	
3.2 GTA	(937)	02/03-	932 A.000	184		330081, 330517	330495	330260, 330518	
155			**01/92 - 12/97**						
1.6 16V T.S.	(167)	05/96-12/97	AR 67601	88		330051, 330064	330121, 330145, 330228, 330273, 330295	330243	
1.7 T.S.	(167)	04/93-04/96	AR 67103	83	330000, 330317, 330535	330051	330106, 330116, 330205, 330273, 330295	330243	
	(167)	04/93-04/96	AR 67105	85	330000, 330317, 330535	330051	330106, 330116, 330205, 330273, 330295	330243	
1.7 T.S. 16V	(167)	05/96-12/97	AR 67106	103		330051, 330064	330121, 330145, 330228, 330273, 330295	330243	
1.8 T.S. Sport	(167)	01/92-12/96	AR 67101, AR 67102	93	330000, 330317	330051	330106, 330116, 330205, 330273, 330295	330243	

OPS Oil Pressure Switches **BLS** Brake Light Switches **TT-RF** Temperature Transmitter and Radiator Fan Switches **RLS** Reverse Light Switches **VAR** Various

ERA S.p.A. Moncalieri (TO) Italy - tel: +39 011 6891511 - fax: +39 011 6472862 - www.eranet.it

Vehicle		Date	Engine	kW	OPS	BLS	TT-RF	RLS	VAR
1.9 TD	(167)	04/93-12/97	AR 67501	66		330051	330206, 330641	330243	
2.0 16V Turbo Q4	(167)	01/92-12/97	AR 67203	137		330051	330120, 330145, 330205	330343	
	(167)	01/92-12/97	AR 67203	140		330051	330120, 330145, 330205	330343	
2.0 T.S.	(167)	02/92-02/95	AR 67202	104	330000, 330317	330051	330106, 330116, 330205, 330273, 330295	330243	
	(167)	02/92-04/93	AR 67201	106	330000, 330317	330051	330106, 330116, 330205, 330273, 330295	330243	
2.0 T.S. 16V	(167)	03/95-12/97	AR 67204	110		330051, 330064	330121, 330145, 330205, 330228, 330273, 330295	330243	
2.5 TD	(167)	04/93-12/97	VM 07 B, VM 31 B	92	330317	330051, 330064	330121, 330295	330343	
2.5 V6	(167)	10/92-12/97	AR 67302, AR 67303	120	330000	330051, 330064	330133, 330205, 330273, 330295	330343	
	(167)	02/92-09/96	AR 67301	121	330000	330051	330133, 330205, 330273, 330295	330343	
156			**09/97 - 05/06**						
1.6 16V T.SPARK	(932)	09/97-09/05	AR 32102, AR 32103, AR 32104, AR 67601	88		330064, 330081, 330517	330121, 330143, 330145, 330495	330243	
1.6 16V T.SPARK.	Sportwagon (932)	05/00-05/06	AR 32102, AR 32103, AR 32104, AR 67601	88		330064, 330081, 330517	330121, 330143, 330145, 330495	330243	
1.8 16V T.SPARK	(932)	10/00-09/05	AR 32205	103		330081	330137, 330495	330243	
	Sportwagon (932)	10/00-05/06	AR 32205	103		330081	330137, 330495	330243	
	(932)	09/97-10/00	AR 32201	106		330064	330137, 330143, 330145	330243	
	Sportwagon (932)	05/00-10/00	AR 32201	106		330064	330137, 330143, 330145	330243	
1.9 JTD	(932)	09/97-10/00	AR 32302	77		330064	330082, 330137, 330143	330260	
	Sportwagon (932)	05/00-10/00	AR 32302	77		330064	330082, 330137, 330143	330260	
	(932)	10/00-05/01	AR 37101	81		330064	330137, 330495	330260, 330518	
	Sportwagon (932)	10/00-05/01	AR 37101	81		330064	330137, 330495	330260, 330518	
	(932)	05/01-09/05	937 A2.000	85		330081, 330517	330495	330260	
	Sportwagon (932)	05/01-05/06	937 A2.000	85		330081, 330517	330495	330260	
	(932)	11/03-09/05	937 A4.000	93		330517			
	Sportwagon (932)	11/03-05/06	937 A4.000	93		330517			
	Sportwagon (932)	03/05-05/06	937 A5.000	110		330081, 330517	330495	330260	
1.9 JTD 16V	(932)	11/02-09/05	192 A5.000	103		330081, 330517	330495	330260	
	Sportwagon (932)	11/02-05/06	192 A5.000	103		330081, 330517	330495	330260	
1.9 JTD 16V Q4	Sportwagon (932)	07/04-05/06	937 A5.000	110		330081, 330517	330495	330260	
2.0	Sportwagon (932)	03/02-05/06	932 A2.000	119		330517			
2.0 16V T.SPARK	(932)	10/00-03/02	AR 32310	110		330081, 330517	330495	330243	
	Sportwagon (932)	10/00-03/02	AR 32310	110		330081, 330517	330495	330243	

OPS Oil Pressure Switches **BLS** Brake Light Switches **TT-RF** Temperature Transmitter and Radiator Fan Switches **RLS** Reverse Light Switches **VAR** Various

Vehicle		Date	Engine	kW	OPS	BLS	TT-RF	RLS	VAR
2.0 16V T.SPARK	(932)	09/97-10/00	AR 32301	114		330064	330137, 330143, 330145	330243	
	Sportwagon (932)	05/00-10/00	AR 32301	114		330064	330137, 330143, 330145	330243	
2.0 JTS	(932)	03/02-09/05	937 A1.000	122		330081, 330517	330495	330243	
	Sportwagon (932)	03/02-05/06	937 A1.000	122		330081, 330517	330495	330243	
2.4 JTD	(932)	09/97-10/00	AR 32501	100		330064	330082, 330137, 330143	330260	
	Sportwagon (932)	05/00-10/00	AR 32501	100		330064	330082, 330137, 330143	330260	
	(932)	10/00-09/05	839 A6.000	103		330064	330137, 330495	330260, 330518	
	Sportwagon (932)	10/00-05/06	839 A6.000	103		330064	330137, 330495	330260, 330518	
	(932)	03/02-09/05	841 C000	110		330081, 330517	330495	330260	
	Sportwagon (932)	03/02-05/06	841 C000	110		330081, 330517	330495	330260	
	(932)	06/03-09/05	841 M.000	120		330081, 330517	330495	330244	
	Sportwagon (932)	06/03-05/06	841 M.000	120		330081, 330517	330495	330244	
	(932)	10/03-09/05	841 G.000	129		330081, 330517	330495	330244	
	Sportwagon (932)	10/03-05/06	841 G.000	129		330081, 330517	330495	330244	
2.5 V6 24V	(932)	09/97-12/01	AR 32401	140		330064	330121, 330143, 330145	330260	
	Sportwagon (932)	05/00-10/00	AR 32401	140		330064	330121, 330143, 330145	330260	
	(932)	10/00-09/05	AR 32405	141		330517	330145, 330495	330260, 330518	
	Sportwagon (932)	10/00-05/06	AR 32405	141		330081, 330517	330495	330260	
3.2 GTA	(932)	03/02-09/05	932 A.000	184		330081, 330517	330495	330260, 330518	
	Sportwagon (932)	03/02-05/06	932 A.000	184		330081, 330517	330495	330260, 330518	
159			**09/05 -**						
1.8 MPI		03/07-	939 A4.000	103		330081, 330517	330509		
	Sportwagon	03/07-	939 A4.000	103		330081, 330517	330509		
1.8 TBi		05/09-	939 B1.000	147		330517			
	Sportwagon	05/09-	939 B1.000	147		330517			
1.9 JTDM 16V		09/05-	939 A8.000	100		330081, 330517	330142		
	Sportwagon	03/06-	937 A8.000	100		330081, 330517	330142		
		09/05-	939 A2.000	110		330081, 330517	330142		
	Sportwagon	03/06-	939 A2.000	110		330081, 330517	330142		
1.9 JTDM 8V		09/05-	939 A7.000	85		330081, 330517	330142		
	Sportwagon	03/06-	937 A7.000	85		330081, 330517	330142		
		09/05-	939 A1.000	88		330081, 330517	330142		
	Sportwagon	03/06-	939 A1.000	88		330081, 330517	330142		
1.9 JTS		09/05-	939 A6.000	118		330081, 330517	330137		
	Sportwagon	03/06-	939 A6.000	118		330081, 330517	330137		
2.0 JTDM		06/10-	939 B4.000	100		330517			
	Sportwagon	06/10-	939 B4.000	100		330517			
		05/09-	939 B3.000	125		330517			

OPS Oil Pressure Switches **BLS** Brake Light Switches **TT-RF** Temperature Transmitter and Radiator Fan Switches **RLS** Reverse Light Switches **VAR** Various

ERA S.p.A. Moncalieri (TO) Italy - tel: +39 011 6891511 - fax: +39 011 6472862 - www.eranet.it

Vehicle		Date	Engine	kW	OPS	BLS	TT-RF	RLS	VAR
2.0 JTDM	Sportwagon	05/09-	939 B3.000	125		330517			
2.2 JTS		09/05-	939 A5.000	136		330081, 330517	330137		
	Sportwagon	03/06-	939 A5.000	136		330081, 330517	330137		
2.4 JTDM		09/05-	939 A3.000	147		330081, 330517	330142		
	Sportwagon	03/06-	939 A3.000	147		330081, 330517	330142		
		05/07-	939 A9.000	154		330081, 330517	330142		
	Sportwagon	05/07-	939 A9.000	154		330081, 330517	330142		
2.4 JTDM Q4		05/07-	939 A9.000	154		330081, 330517	330142		
	Sportwagon	05/07-	939 A9.000	154		330081, 330517	330142		
3.2 JTS		02/08-	939 A.000	191		330517			
	Sportwagon	02/08-	939 A.000	191		330517			
3.2 JTS Q4		12/05-	939 A.000	191		330081, 330517	330137		
	Sportwagon	03/06-	939 A.000	191		330081, 330517	330137		
164			**01/87 - 09/98**						
2.0 T.S.		06/87-09/92	AR 06416	105	330535	330523	330106, 330116, 330165, 330292	330339	
		09/92-09/98	AR 64103	106	330000, 330317, 330535		330106, 330116, 330165	330343	
		06/87-12/90	AR 06420	109	330535	330523	330106, 330116, 330165, 330292	330339	
2.0 Turbo		10/87-09/98	AR 06476	128		330523	330116, 330291	330339	
2.0 V6 Turbo		09/92-09/98	AR 64102	148	330317		330133, 330205	330343	
		03/91-09/92	AR 64101	150	330535	330523	330133, 330206	330339	
2.5 TD		06/87-09/92	VM 84 A	84	330535	330523	330121, 330292	330339	
		09/92-09/98	VM 08 B, VM 32 B	92	330317		330121, 330206, 330292	330343	
3.0 24V		09/92-09/98	AR 66301, AR 66302	155			330116, 330205	330343	
3.0 24V Q4		02/94-09/98	AR 64307, AR 64308	170	330000	330434	330116, 330205		
3.0 24V QV		09/92-09/98	AR 64304	171	330000		330116, 330205		
3.0 i.e. QV		09/90-09/92	AR 06430, AR 64301	147	330535	330523	330116, 330165, 330292		
3.0 V6		09/92-09/98	AR 64305, AR 66303	132			330133, 330205	330343	
		06/87-09/92	AR 06412	135	330535	330523	330116, 330165, 330292	330339	
		06/87-09/92	AR 06410	141	330535	330523	330116, 330165, 330292	330339	
166			**09/98 -**						
2.0 T.Spark	(936)	10/00-	AR 36301	110		330081, 330491, 330517	330495	330260	
	(936)	09/98-10/00	AR 34103	114		330050	330143	330260	
2.0 V6	(936)	09/98-	AR 34102	151	330317	330051	330143	330260	
2.4 JTD	(936)	09/98-10/00	AR 34202	100		330050, 330051, 330064	330137, 330143	330260	
	(936)	10/00-	839 A6.000	103		330064, 330081, 330517	330137, 330495	330260	

OPS Oil Pressure Switches **BLS** Brake Light Switches **TT-RF** Temperature Transmitter and Radiator Fan Switches **RLS** Reverse Light Switches **VAR** Various

Vehicle		Date	Engine	kW	OPS	BLS	TT-RF	RLS	VAR
2.4 JTD	(936)	04/02-	841 C000	110		330064, 330081, 330517	330137, 330495	330260	
	(936)	10/03-	841 G.000, 841 H.000	129		330064, 330081, 330517	330495	330244	
	(936)	07/06-	841 M.000	132		330064, 330081, 330517	330495	330244	
	(936)	07/05-	936 B.000	136		330064, 330081, 330517	330495	330244	
2.5 V6 24V	(936)	10/00-	AR 36201	138		330081, 330517	330495	330260	
	(936)	09/98-10/00	AR 34201	140		330050, 330051	330143	330260	
3.0 V6 24V	(936)	10/00-	AR 36101	162		330081, 330517	330495	330260	
	(936)	09/98-10/00	AR 34301	166		330050, 330051	330143	330260	
3.2 V6 24V	(936)	10/03-	936 A.000	176		330081, 330517	330495	330260	
33			**05/83 - 09/94**						
1.2	(905)	06/83-12/89	AR 30585	50	330002	330336	330106	330347	
1.3	(905)	06/83-12/89	AR 30502, AR 30586	55	330002	330336	330106	330347	
	(905)	10/84-12/89	AR 30168, AR 30587	63	330002	330336	330106	330347	
1.4 i.e.	(907A)	06/91-09/94	AR 30753, AR 30755	65	330002	330512	330106, 330116, 330124, 330273, 330291	330347	
	(907A)	06/91-09/94	AR 30753, AR 30755	66	330002	330512	330106, 330116, 330124, 330273, 330291	330347	
1.4 i.e. 4x4	Sportwagon (907B)	06/91-09/94	AR 30587, AR 30755	66	330002	330336	330106	330347	
1.5	(905)	07/86-12/89	AR 30588	75	330002	330336	330106	330347	
	(907A)	01/90-04/93	AR 30734	77	330002	330512	330106, 330291	330347	
1.5 4x4	(905)	09/86-12/89	AR 30146, AR 30588	77	330002	330336	330106	330347	
	Sportwagon (905A)	12/86-03/89	AR 30146, AR 30508, AR 30588	77	330002	330336	330106	330347	
1.5 i.e	(907A)	01/90-09/94	AR 30751	71	330002	330512	330106, 330116, 330273, 330291	330347	
	Sportwagon (907B)	01/90-09/94	AR 30751	71	330002	330512	330106, 330116, 330273, 330291	330347	
1.5 i.e.	(907A)	07/90-08/91	AR 30750	74	330002	330512	330106, 330116, 330273, 330291	330347	
1.5 QV	(905)	06/84-12/89	AR 30146, AR 30508, AR 30588	77	330002	330336	330106	330347	
1.7	(905)	01/86-12/89	AR 30550	87	330002	330336	330106, 330165	330347	
	Sportwagon (905A)	03/88-12/89	AR 30550	87	330002	330336	330106, 330165	330347	
1.7 16V	(907A)	01/90-09/94	AR 30747	95	330002	330049, 330512	330106, 330116, 330273, 330291	330347	
	Sportwagon (907B)	01/90-09/94	AR 30747	95	330002	330049, 330512	330106, 330116, 330273, 330291	330347	
	(907A)	01/90-03/92	AR 30747	97	330002	330049, 330512	330106, 330116, 330273, 330291	330347	
	Sportwagon (907B)	01/90-09/94	AR 30747	97	330002	330049, 330512	330106, 330116, 330273, 330291	330347	
	(907A)	01/90-03/92	AR 30746	101	330002	330049	330106, 330116, 330273, 330291	330347	

OPS Oil Pressure Switches **BLS** Brake Light Switches **TT-RF** Temperature Transmitter and Radiator Fan Switches **RLS** Reverse Light Switches **VAR** Various

ERA S.p.A. Moncalieri (TO) Italy - tel: +39 011 6891511 - fax: +39 011 6472862 - www.eranet.it

Vehicle		Date	Engine	kW	OPS	BLS	TT-RF	RLS	VAR
1.7 16V	Sportwagon (907B)	01/90-03/92	AR 30746	101	330002	330049	330106, 330116, 330273, 330291	330347	
1.7 16V 4x4	(907A)	01/90-09/94	AR 30747	95	330002	330512	330106, 330116, 330273, 330291	330347	
	Sportwagon (907B)	01/90-09/94	AR 30747	95	330002	330512	330106, 330116, 330273, 330291	330347	
	(907A)	01/90-09/94	AR 30747	97	330002	330512	330106, 330116, 330273, 330291	330347	
	Sportwagon (907B)	01/90-03/92	AR 30747	97	330002	330512	330106, 330116, 330273, 330291	330347	
	(907A)	01/90-09/94	AR 30746	101	330002	330512	330106, 330116, 330273, 330291	330347	
1.7 i.e.	(905)	09/88-12/89	AR 30558	77	330002	330336	330106, 330116, 330165	330347	
	Sportwagon (905A)	09/88-12/89	AR 30558	77	330002	330336	330106, 330116, 330165	330347	
	Sportwagon (907B)	04/92-09/94	AR 30737	77	330002	330049	330106, 330116, 330273, 330291	330347	
	(907A)	01/90-03/92	AR 30736, AR 30737	79	330002	330049, 330512	330106, 330116, 330273, 330291	330347	
	Sportwagon (907B)	01/90-03/92	AR 30736, AR 30737	79	330002	330049	330106, 330116, 330273, 330291	330347	
1.7 i.e. 4x4	Sportwagon (905A)	09/88-12/89	AR 30558	77	330002	330336	330106, 330116, 330165	330347	
	(907A)	01/90-03/92	AR 30736, AR 30737	79	330002	330049	330106, 330116, 330273, 330291	330347	
	Sportwagon (907B)	01/90-03/92	AR 30736, AR 30737	79	330002	330049	330106, 330116, 330273, 330291	330347	
1.7 QV	(905)	03/88-12/89	AR 30550	84	330002	330336	330106, 330165	330347	
1.8 TD	(905)	01/86-06/90	VM 82 A	54	330317	330336	330267	330347	
	(907A)	07/90-09/94	VM 96 A	62	330317	330512	330267	330347	
6			**04/79 - 12/86**						
2.0	(119)	07/81-12/86	AR 01932	99		330032	330083, 330292	330347	
75			**05/85 - 12/92**						
1.6	(162B)	05/89-02/92	AR 61101	81	330317	330049	330083, 330292, 330691	330347	
	(162B)	05/85-09/89	AR 06100	81	330317	330049	330083, 330292	330347	
1.8	(162B)	09/85-06/89	AR 06202	85	330317	330049	330083, 330292	330347	
	(162B)	09/88-02/92	AR 06168, AR 61102	88	330317	330049	330083, 330292, 330691	330347	
	(162B)	08/89-02/92	AR 61201	90	330317	330049	330083, 330292, 330691	330347	
1.8 Turbo	(162B)	09/86-02/92	AR 06134	110	330317	330049	330083, 330133, 330292	330347	
2.0 T.S	(162B)	05/85-02/92	AR 06224	109	330317	330049	330106, 330116, 330292	330347	
2.0 T.S.	(162B)	01/87-02/92	AR 06166, AR 06224	107	330317	330049	330106, 330116, 330292	330347	
	(162B)	01/87-12/88	AR 06224	109	330317	330049	330106, 330116, 330292	330347	
2.0 TD	(162B)	05/85-09/92	VM 80 A	70	330317	330049	330292	330347	

OPS Oil Pressure Switches **BLS** Brake Light Switches **TT-RF** Temperature Transmitter and Radiator Fan Switches **RLS** Reverse Light Switches **VAR** Various

Vehicle		Date	Engine	kW	OPS	BLS	TT-RF	RLS	VAR
2.4 TD	(162B)	01/89-02/92	VM 81 A	82	330317	330049	330292	330347	
2.5 V6	(162B)	05/85-08/86	AR 01646, AR 01911	115	330317	330049	330292, 330691		
3.0 V6	(162B)	01/87-12/90	AR 06120	136	330317	330049	330292, 330691	330347	
	(162B)	01/87-02/92	AR 06124	136	330317	330049	330292, 330691	330347	
	(162B)	02/90-02/92	AR 61503	141	330317	330049	330116, 330292	330347	
90			**10/84 - 07/87**						
1.8	(162)	10/84-07/87	AR 06202	89	330317	330336	330083, 330292	330347	
2.0 i.e.	(162)	10/84-07/87	AR 06210	97	330317	330336	330083, 330292	330347	
2.4 TD	(162)	10/84-07/87	VM 81 A	81	330317	330336	330292	330347	
2.5 i.e. V6	(162)	10/84-07/87	AR 01646, AR 01911	110		330336	330292, 330691	330347	
ALFASUD			**06/72 - 06/85**						
1.2	(901)	06/72-09/84	AR 30102	46	330002	330512	330165	330347	
ALFETTA			**07/74 - 12/84**						
1.6	(116)	01/75-12/84	AR 01600	79		330032	330083, 330292	330347	
1.8	(116)	07/74-12/77	AR 01608 X	85		330032	330083, 330292	330347	
	(116)	10/79-12/84	AR 01608	89		330032	330083, 330292	330347	
2.0 TD	(116)	10/79-03/83	VM4HT/2	60	330317	330032	330292	330347	
BRERA			**01/06 -**						
2.2 JTS		01/06-	939 A5.000	136		330081, 330517	330137		
2.4 JTDM 20V		01/06-	939 A3.000	147		330517			
		05/07-	939 A9.000	154		330517			
3.2 JTS		03/08-	939 A.000	191		330517			
3.2 JTS Q4		01/06-	939 A.000	191		330081, 330517	330137		
GIULIETTA			**10/77 - 12/85**						
1.3	(116)	10/77-06/83	AR 01644	66		330032	330083, 330292	330347	
1.6	(116)	10/77-04/85	AR 01600	79		330032	330083, 330292	330347	
1.8	(116)	04/79-04/85	AR 01678	90	330317	330336	330083, 330292	330347	
2.0	(116)	06/80-04/85	AR 01655, AR 11671	96	330317	330336	330083, 330292	330347	
2.0 TD	(116)	01/83-12/85	VM 4 HT	61	330317	330336	330292	330347	
GT			**11/03 -**						
1.8 TS		11/03-	AR 32205	103		330081, 330517	330495	330243, 330518	
1.9 JTD		11/03-	937 A5.000	110		330081, 330517	330142	330260, 330518	
		05/08-	937 A6.000	125		330517			
2.0 JTS		11/03-	932 A2.000, 937 A1.000	121		330081, 330517	330495	330243, 330518	
3.2 GTA		11/03-	936 A.000	176		330081, 330517	330495	330260, 330518	
GTV			**09/94 -**						
1.8 16V	(916C_)	05/98-	AR 32201	106		330051	330143	330243	

OPS Oil Pressure Switches **BLS** Brake Light Switches **TT-RF** Temperature Transmitter and Radiator Fan Switches **RLS** Reverse Light Switches **VAR** Various

ERA S.p.A. Moncalieri (TO) Italy - tel: +39 011 6891511 - fax: +39 011 6472862 - www.eranet.it

Vehicle		Date	Engine	kW	OPS	BLS	TT-RF	RLS	VAR
2.0 JTS	(916C_)	04/03-	937 A1.000	121		330064, 330081, 330491, 330517	330495	330243	
2.0 T.SPARK 16V	(916C_)	06/95-	AR 16201, AR 32310	110		330050, 330051, 330064, 330081, 330491, 330517	330121, 330145, 330228, 330495	330243	
	(916C_)	05/98-08/00	AR 32301	114		330051, 330064, 330081, 330517	330143	330243	
2.0 V6 Turbo	(916C_)	06/95-	AR 16202	148	330317	330050, 330051	330133, 330228	330260, 330343	
3.0 V6 24V	(916C_)	10/00-	AR 16105	160		330051, 330064, 330081, 330517	330228, 330495	330260	
	(916C_)	10/96-10/00	AR 16102	162		330050, 330051, 330064, 330081, 330517	330116, 330143, 330145, 330228	330260, 330343	
3.2 V6 24V	(916C_)	04/03-	936 A6.000	176		330064, 330081, 330517	330228, 330495	330260	
RZ			**01/92 - 12/94**						
3.0 V6 Zagato		01/92-12/94	AR 61501	152			330116		
SPIDER			**03/71 -**						
1.8 16V	(916S_)	05/98-04/05	AR 32201	106		330051	330143	330243	
1.8 TBi	(939)	05/09-	939 B1.000	147		330517			
1600	(115)	03/76-12/90	AR 00526	76	330317	330051	330083, 330292	330347	
	(115)	01/90-12/93	AR 01563	79	330317	330051	330083, 330292	330347	
2.0 JTDM	(939)	05/09-	939 B3.000	125		330517			
2.0 JTS	(916S_)	04/03-04/05	937 A1.000	121		330051, 330064, 330081, 330491, 330517	330495	330243	
2.0 T.SPARK 16V	(916S_)	06/95-04/05	AR 16201, AR 32310	110		330050, 330051, 330064, 330081, 330491, 330517	330121, 330145, 330228, 330495	330243	
	(916S_)	05/98-08/00	AR 32301	114		330051, 330064, 330081, 330517	330143	330243	
2.0 V6 Turbo	(916S_)	05/98-04/05	AR 16202	148	330317	330051	330133, 330228	330260	
2.2 JTS	(939)	09/06-	939 A5.000	136		330081, 330517	330137		
2.4 JTDM	(939)	04/07-	939 A3.000	147		330081, 330517	330142		
	(939)	03/08-	939 A3.000	154		330517			
2000	(115)	08/86-12/90	AR 01544	85		330032	330083	330347	
	(115)	01/90-12/93	AR 01588	88	330317	330051	330083, 330116, 330292	330347	
2000 Veloce	(115)	01/77-12/93	AR 00515, AR 01590	93	330317	330051	330083, 330116, 330292	330347	
3.0 V6	(916S_)	06/95-04/05	AR 16101	141		330051, 330081, 330517	330116, 330228	330260	
	(916S_)	10/00-04/05	AR 16105	160		330051, 330064, 330081, 330517	330228, 330495	330260	
3.2 JTS	(939)	03/08-	939 A.000	191		330081, 330517	330137		
3.2 JTS Q4	(939)	09/06-	939 A.000	191		330081, 330517	330137		
3.2 V6 24V	(916S_)	04/03-04/05	936 A6.000	176		330064, 330081, 330517	330228, 330495	330260	

OPS Oil Pressure Switches **BLS** Brake Light Switches **TT-RF** Temperature Transmitter and Radiator Fan Switches **RLS** Reverse Light Switches **VAR** Various

Vehicle		Date	Engine	kW	OPS	BLS	TT-RF	RLS	VAR
SZ			**09/88 - 08/94**						
3.0 V6 Zagato		09/88-08/94	AR 61501	152	330317	330049	330292	330347	
ALPINE									
V6			**01/85 - 03/92**						
2.5 TURBO		01/88-12/90	Z7U	147		330037	330169, 330209	330237	
2.9 GT		01/85-12/90	Z6W	116		330037	330169, 330209	330237	
AUDI									
100			**11/68 - 11/94**						
1.6	(43, C2)	08/76-07/82	YV	63		330414			
	(C1)	01/75-07/76	YM	63		330414			
	Avant (43, C2)	07/77-02/83	YV	63		330414			
1.8	(44, 44Q, C3)	08/82-12/87	DR, RS	55		330038, 330414			
	Avant (44, 44Q, C3)	08/82-12/87	DR, RS	55		330038, 330414			
	(44, 44Q, C3)	02/86-07/88	SH	65		330038			
	Avant (44, 44Q, C3)	02/86-07/90	SH	65	330337, 330342	330038, 330327	330127, 330284, 330285, 330297, 330687	330234	
	(44, 44Q, C3)	08/83-07/89	DS, JW, NP	66	330004, 330337	330038, 330327, 330414	330268, 330284, 330297, 330687	330234	
	Avant (44, 44Q, C3)	08/83-07/89	JW, NP	66	330004, 330337	330327	330268, 330284, 330297, 330687	330234	
	(C1)	10/70-07/76	ZZ	74		330414			
1.8 CAT	(44, 44Q, C3)	03/85-11/90	4B, PH	66	330337, 330342	330038, 330327	330127, 330284, 330285, 330297, 330687	330234	
	Avant (44, 44Q, C3)	03/85-11/90	4B, PH	66	330337, 330342	330038, 330327	330127, 330284, 330285, 330297, 330687	330234	
1.8 quattro	(44, 44Q, C3)	08/86-07/90	SH	65	330337, 330342	330038, 330327	330268, 330284, 330297, 330687	330234	
	Avant (44, 44Q, C3)	08/86-07/90	SH	65		330038			
	(44, 44Q, C3)	10/84-07/88	JW, NP	66	330004, 330337	330038, 330327	330268, 330284, 330297, 330687	330234	
	Avant (44, 44Q, C3)	10/84-07/88	JW, NP	66		330038			
1.8 quattro CAT	(44, 44Q, C3)	08/85-11/90	4B, PH	66	330337, 330342	330038, 330327	330127, 330268, 330284, 330297, 330687	330234	
	Avant (44, 44Q, C3)	08/85-10/90	4B, PH	66		330038			
1.9	(43, C2)	08/80-07/82	WH	74		330414			
	(44, 44Q, C3)	08/82-07/84	WH	74		330038, 330414			
	Avant (43, C2)	08/80-07/82	WH	74		330414			
	Avant (44, 44Q, C3)	02/83-07/84	WH	74		330038, 330414			
	(C1)	09/71-07/76	ZJ	82		330414			
2.0	(4A, C4)	12/90-06/94	AAE	74	330337, 330342	330327	330150, 330286, 330309, 330687		
	(44, 44Q, C3)	08/86-11/87	SL	83		330038			

OPS Oil Pressure Switches **BLS** Brake Light Switches **TT-RF** Temperature Transmitter and Radiator Fan Switches **RLS** Reverse Light Switches **VAR** Various

ERA S.p.A. Moncalieri (TO) Italy - tel: +39 011 6891511 - fax: +39 011 6472862 - www.eranet.it

Vehicle		Date	Engine	kW	OPS	BLS	TT-RF	RLS	VAR
2.0	Avant (44, 44Q, C3)	09/86-11/87	SL	83		330038			
	(43, C2)	06/76-08/78	WA	85		330414			
	(44, 44Q, C3)	08/84-12/87	KP	85		330038, 330414			
	Avant (43, C2)	08/77-07/80	WA	85		330414			
	Avant (4A, C4)	08/92-07/93	ACE	103	330337, 330342	330327	330127		
2.0 CAT	(44, 44Q, C3)	01/88-11/90	RT	85	330322, 330337, 330341, 330342	330327	330136, 330159, 330284, 330297	330234	
2.0 quattro	Avant (4A, C4)	08/92-07/93	ACE	103	330337, 330342	330327	330127		
2.0 D	(43, C2)	08/78-07/82	CN	51		330414			
	(44, 44Q, C3)	08/82-07/88	CN	51	330004, 330322, 330337, 330341	330038, 330327, 330414	330157, 330268, 330284, 330297	330234	
	Avant (43, C2)	08/78-02/83	CN	51		330414			
	Avant (44, 44Q, C3)	03/83-11/90	CN	51		330038			
2.0 D Turbo	(44, 44Q, C3)	08/82-02/88	DE	64		330038, 330414			
	(44, 44Q, C3)	03/88-11/90	NC	74	330322, 330337, 330341, 330342	330327	330157, 330159, 330284, 330297	330234	
2.0 E	Avant (4A, C4)	09/91-06/94	AAE	74	330337, 330342	330327	330150, 330286, 330309, 330687		
	(4A, C4)	12/90-06/94	AAD, ABK	85	330337, 330342	330327	330150, 330286, 330309, 330687		
	Avant (44, 44Q, C3)	01/85-12/87	KP	85		330038			
	Avant (4A, C4)	09/91-06/94	AAD, ABK	85	330337, 330342	330327	330150, 330286, 330309, 330687		
2.0 E 16V	(4A, C4)	01/92-06/94	ACE	103	330337, 330342	330327	330127, 330687		
	Avant (4A, C4)	07/92-06/94	ACE	103	330337, 330342	330327	330127, 330687		
2.0 E 16V quattro	(4A, C4)	07/92-06/94	ACE	103	330337, 330342	330327	330127, 330687		
	Avant (4A, C4)	07/92-06/94	ACE	103	330337, 330342	330327	330127, 330687		
2.0 E CAT	Avant (44, 44Q, C3)	01/88-11/90	RT	85	330322, 330337, 330341, 330342	330327	330136, 330159, 330284, 330297	330234	
2.0 E quattro	(4A, C4)	12/90-07/92	AAD	85	330337, 330342	330327	330150, 330286, 330309, 330687		
	Avant (4A, C4)	12/90-07/92	AAD	85	330337, 330342	330327	330150, 330286, 330309, 330687		
2.0 TD	Avant (44, 44Q, C3)	03/83-10/87	DE	64		330038, 330414			
	Avant (44, 44Q, C3)	03/88-11/90	NC	74	330322, 330337, 330341, 330342	330327	330157, 330159, 330284, 330297	330234	
2.1	(43, C2)	10/77-07/82	WB, WE	85		330414			
	Avant (43, C2)	07/77-02/83	WB, WE	85		330414			
	(43, C2)	03/77-07/82	WC, WG	100		330414			
	(44, 44Q, C3)	08/82-07/84	WC	100		330038, 330414			
	Avant (43, C2)	07/77-02/83	WC, WG	100		330414			
	Avant (44, 44Q, C3)	08/82-07/84	WC	100		330038, 330414			
2.2	(44, 44Q, C3)	08/82-07/84	WU	79		330038			
	(44, 44Q, C3)	10/84-09/86	KZ	85		330038			
	Avant (44, 44Q, C3)	10/84-09/86	KZ	85		330038			
	(44, 44Q, C3)	08/82-07/84	KF	96		330038			

OPS Oil Pressure Switches **BLS** Brake Light Switches **TT-RF** Temperature Transmitter and Radiator Fan Switches **RLS** Reverse Light Switches **VAR** Various

Vehicle		Date	Engine	kW	OPS	BLS	TT-RF	RLS	VAR
2.2	Avant (44, 44Q, C3)	08/84-12/88	KU	101		330038			
2.2 CAT	(44, 44Q, C3)	06/89-11/90	HX, KU	101	330322, 330337, 330341, 330342	330327	330159, 330284, 330297	330234	
	Avant (44, 44Q, C3)	06/89-11/90	KU	101	330322, 330337, 330341, 330342	330327	330159, 330284, 330297	330234	
2.2 quattro	(44, 44Q, C3)	08/84-12/88	KU	101		330038			
	Avant (44, 44Q, C3)	08/84-12/88	KU	101		330038			
2.2 quattro CAT	(44, 44Q, C3)	06/89-11/90	KU	101	330322, 330337, 330341, 330342	330327	330159, 330268, 330284, 330297	330234	
2.2 E quattro	(44, 44Q, C3)	08/85-07/86	PX	88		330038			
	Avant (44, 44Q, C3)	08/85-07/86	PX	88		330038			
2.2 E Turbo quattro	(44, 44Q, C3)	08/86-11/90	MC	121	330322, 330337, 330341, 330342	330038, 330327	330268, 330284, 330297, 330309	330234	
2.2 Turbo	(44, 44Q, C3)	08/86-11/90	MC	121	330322, 330337, 330341, 330342	330038, 330327	330159, 330284, 330297, 330309	330234	
	Avant (44, 44Q, C3)	08/86-11/90	MC	121	330322, 330337, 330341, 330342	330038, 330327	330159, 330284, 330297, 330309	330234	
2.2 Turbo quattro	Avant (44, 44Q, C3)	08/86-11/90	MC	121		330038			
2.3	Avant (44, 44Q, C3)	08/86-11/90	NF	100	330322, 330337, 330341, 330342	330038, 330327	330136, 330159, 330297	330234	
2.3 E	(4A, C4)	12/90-06/94	AAR	98	330337, 330342	330327	330136, 330159		
	Avant (4A, C4)	09/91-06/94	AAR	98	330337, 330342	330327	330136, 330159		
	(44, 44Q, C3)	10/86-11/90	NF	100	330322, 330337, 330341, 330342	330038, 330327	330136, 330159, 330297	330234	
2.3 E quattro	(4A, C4)	12/90-06/94	AAR	98	330337, 330342	330327	330136, 330159		
	Avant (4A, C4)	09/91-06/94	AAR	98	330337, 330342	330327	330136, 330159		
	(44, 44Q, C3)	08/86-11/90	NF	100	330322, 330337, 330341, 330342	330327	330136, 330159, 330268, 330297	330234	
	Avant (44, 44Q, C3)	08/86-11/90	NF	100		330038			
2.4 D	(44, 44Q, C3)	08/89-07/91	3D	60	330322, 330337, 330341, 330342	330327	330157, 330159, 330284, 330297	330234	
	(4A, C4)	12/90-06/94	AAS	60	330341, 330342	330327	330284		
	Avant (44, 44Q, C3)	08/89-11/90	3D	60	330322, 330337, 330341, 330342	330327	330157, 330159, 330284, 330297	330234	
	Avant (4A, C4)	12/90-06/94	AAS	60	330341, 330342	330327	330284		
2.5 TDI	(4A, C4)	12/90-06/94	AAT, ABP	85	330341, 330342	330327	330115	330249	
	Avant (4A, C4)	12/90-06/94	AAT, ABP	85	330341, 330342	330327	330115	330249	
	(44, 44Q, C3)	01/90-11/90	1T	88	330322, 330337, 330341, 330342	330327	330115, 330157, 330159, 330284, 330297	330234	
	Avant (44, 44Q, C3)	01/90-11/90	1T	88	330322, 330337, 330341, 330342	330327	330115, 330157, 330159, 330284, 330297	330234	
2.6	(4A, C4)	07/93-06/94	ACZ	102	330342	330327	330127, 330687		
	Avant (4A, C4)	07/93-06/94	ACZ	102	330342	330327	330127, 330687		
	(4A, C4)	03/92-06/94	ABC	110	330341, 330342	330327	330127, 330687		
	Avant (4A, C4)	03/92-06/94	ABC	110	330341, 330342	330327	330127, 330687		
2.6 quattro	(4A, C4)	04/92-06/94	ABC	110	330341, 330342	330327	330127, 330687		
	Avant (4A, C4)	07/92-06/94	ABC	110	330341, 330342	330327	330127, 330687		

OPS Oil Pressure Switches **BLS** Brake Light Switches **TT-RF** Temperature Transmitter and Radiator Fan Switches **RLS** Reverse Light Switches **VAR** Various

ERA S.p.A. Moncalieri (TO) Italy - tel: +39 011 6891511 - fax: +39 011 6472862 - www.eranet.it

Vehicle		Date	Engine	kW	OPS	BLS	TT-RF	RLS	VAR
2.6 E quattro	(4A, C4)	08/93-07/94	ACZ	102	330342	330327	330127, 330687		
	Avant (4A, C4)	08/93-07/94	ACZ	102	330342	330327	330127, 330687		
2.8 E	(4A, C4)	12/90-06/94	AAH	128	330341, 330342	330327	330127, 330687		
	Avant (4A, C4)	09/91-06/94	AAH	128	330341, 330342	330327	330127, 330687		
2.8 E quattro	(4A, C4)	12/90-06/94	AAH	128	330341, 330342	330327	330127, 330687		
	Avant (4A, C4)	09/91-06/94	AAH	128	330341, 330342	330327	330127, 330687		
200		**06/83 - 12/91**							
2.2 Turbo	(44, 44Q)	08/85-09/91	MC	121	330004, 330337	330327	330268, 330284, 330309	330234	
	(44, 44Q)	02/88-12/90	1B	147	330004, 330337	330327	330268, 330284, 330309	330234	
80		**05/72 - 01/96**							
1.3	(, 82, B1)	05/72-07/78	ZA	40		330414			
	(81, 85, B2)	09/78-07/81	FY	40		330414			
	(, 82, B1)	05/72-07/78	ZF	44		330414			
	(81, 85, B2)	09/78-07/86	EP	44	330322, 330337, 330342	330327, 330414	330284, 330285, 330297	330234	
1.4	(89, 89Q, 8A, B3)	08/86-07/88	SE	48	330322, 330337, 330341, 330342	330327	330284, 330285, 330297, 330307, 330687		
1.5	(, 82, B1)	05/72-08/75	YJ, ZB	55		330414			
	(, 82, B1)	05/72-07/76	ZC	63		330414			
1.6	(89, 89Q, 8A, B3)	08/87-09/91	PP	51	330322, 330337, 330341, 330342	330327	330127, 330150, 330284, 330285, 330297, 330307, 330687		
	(81, 85, B2)	02/86-07/86	SA	54	330322, 330337, 330342	330327	330284, 330285, 330297	330234	
	(, 82, B1)	09/75-07/78	YN	55		330414			
	(81, 85, B2)	08/78-07/86	DT	55	330322, 330337, 330342	330327, 330414	330127, 330284, 330285, 330297	330234	
	(89, 89Q, 8A, B3)	09/86-08/91	RN	55	330322, 330337, 330341, 330342	330327	330150, 330284, 330285, 330297, 330307, 330687		
	(, 82, B1)	09/75-07/78	YP	63		330414			
	(81, 85, B2)	08/78-02/83	YP	63		330414			
	(89, 89Q, 8A, B3)	08/90-10/91	ABB	75	330322, 330337, 330341, 330342	330327	330150, 330284, 330285, 330297, 330309, 330687		
1.6 D	(81, 85, B2)	08/80-08/86	CR, JK	40	330322, 330337, 330342	330327, 330414	330157, 330284, 330297	330234	
	(89, 89Q, 8A, B3)	09/86-08/91	JK	40	330322, 330337, 330341, 330342	330327	330157, 330284, 330297, 330687		
1.6 E	Avant (8C, B4)	06/93-01/96	ADA	74	330337, 330342	330327	330297, 330309, 330687		
1.6 GLE	(81, 85, B2)	01/79-12/86	YZ	81		330414			
1.6 GT	(, 82, B1)	09/73-07/76	XX	74		330414			
1.6 GTE	(, 82, B1)	01/76-07/78	YS	81		330414			

OPS Oil Pressure Switches **BLS** Brake Light Switches **TT-RF** Temperature Transmitter and Radiator Fan Switches **RLS** Reverse Light Switches **VAR** Various

Vehicle		Date	Engine	kW	OPS	BLS	TT-RF	RLS	VAR
1.6 TD	(81, 85, B2)	08/81-05/86	CY	51	330322, 330337, 330342	330327, 330414	330157, 330284, 330297	330234	
	(89, 89Q, 8A, B3)	09/86-08/91	RA, SB	59	330322, 330337, 330341, 330342	330327	330103, 330150, 330157, 330284, 330285, 330297, 330309		
1.8	(89, 89Q, 8A, B3)	10/86-01/90	RU	55	330322, 330337, 330341, 330342	330327	330150, 330284, 330285, 330297, 330307, 330687		
	(81, 85, B2)	02/86-07/86	SF	65	330322, 330337, 330342	330327	330127, 330284, 330285, 330297	330234	
	(81, 85, B2)	01/83-08/86	DS	66	330322, 330337, 330342	330327, 330414	330127, 330284, 330285, 330297	330234	
	(81, 85, B2)	08/83-08/86	JN	68	330322, 330337, 330342	330327, 330414	330127, 330284, 330285, 330297	330234	
	(89, 89Q, 8A, B3)	09/86-07/88	SD	83	330322, 330337, 330341, 330342	330327	330127, 330284, 330285, 330297, 330308, 330687		
1.8 quattro	(89, 89Q, 8A, B3)	09/86-08/90	SD	83	330322, 330337, 330341, 330342	330327	330268, 330284, 330297, 330308, 330687		
1.8 E	(89, 89Q, 8A, B3)	06/86-08/91	DZ	82	330322, 330337, 330341, 330342	330327	330150, 330284, 330285, 330297, 330308, 330309, 330687		
1.8 E quattro	(89, 89Q, 8A, B3)	09/86-08/91	DZ	82	330322, 330337, 330341, 330342	330327	330268, 330284, 330297, 330308, 330687		
1.8 GTE	(81, 85, B2)	08/85-07/86	PV	81	330322, 330337, 330342	330327	330284, 330297, 330687	330234	
	(81, 85, B2)	10/84-08/86	DZ	82	330322, 330337, 330342	330327, 330414	330284, 330297, 330687	330234	
1.8 S	(89, 89Q, 8A, B3)	09/86-12/90	SF	65	330322, 330337, 330341, 330342	330327	330150, 330284, 330285, 330297, 330307, 330687		
	(89, 89Q, 8A, B3)	09/86-10/91	JN, NE, PM	66	330322, 330337, 330341, 330342	330327	330127, 330150, 330284, 330285, 330286, 330297, 330307, 330308, 330309, 330687		
1.8 S quattro	(89, 89Q, 8A, B3)	09/86-07/90	SF	65	330322, 330337, 330341, 330342	330327	330268, 330284, 330297, 330308, 330687		
	(89, 89Q, 8A, B3)	09/86-09/91	JN, NE, PM	66	330322, 330337, 330341, 330342	330327	330268, 330284, 330297, 330308, 330687		
1.9 CD-5S	(81, 85, B2)	09/81-07/83	WN	85		330414			
1.9 D	(89, 89Q, 8A, B3)	08/89-08/91	1Y	50	330322, 330337, 330341, 330342	330327	330103, 330150, 330157, 330284, 330285, 330297		
1.9 TD	Avant (8C, B4)	09/91-12/94	AAZ	55	330341, 330342	330327	330103, 330150, 330151, 330286, 330297, 330309, 330687		
1.9 TDI	Avant (8C, B4)	07/92-01/96	1Z	66	330341, 330342	330327	330103, 330150, 330286, 330297, 330309, 330687		

OPS Oil Pressure Switches **BLS** Brake Light Switches **TT-RF** Temperature Transmitter and Radiator Fan Switches **RLS** Reverse Light Switches **VAR** Various

ERA S.p.A. Moncalieri (TO) Italy - tel: +39 011 6891511 - fax: +39 011 6472862 - www.eranet.it

Vehicle		Date	Engine	kW	OPS	BLS	TT-RF	RLS	VAR
2.0	Avant (8C, B4)	07/92-01/96	ABT	66	330337, 330342	330327	330150, 330286, 330297, 330687		
	(89, 89Q, 8A, B3)	10/90-08/91	AAD	82	330322, 330337, 330341, 330342	330327	330127, 330150, 330284, 330285, 330286, 330297, 330309, 330687		
	(81, 85, B2)	10/83-09/84	HP, JS	85	330337, 330342	330327	330159, 330284, 330297	330234	
2.0 quattro	Avant (8C, B4)	11/93-07/96	ADW	79			330687		
2.0 E	(89, 89Q, 8A, B3)	08/88-10/90	3A	83	330322, 330337, 330341, 330342	330327	330127, 330150, 330284, 330285, 330297, 330308, 330309, 330687		
	Avant (8C, B4)	07/92-01/96	ABK	85	330337, 330342	330327	330150, 330286, 330297, 330309, 330687		
2.0 E 16V	(89, 89Q, 8A, B3)	03/90-09/91	6A	101	330322, 330337, 330341, 330342	330327	330127, 330150, 330284, 330285, 330297		
	Avant (8C, B4)	02/93-01/96	ACE	103	330337, 330342	330327	330127, 330297, 330687		
2.0 E 16V quattro	(89, 89Q, 8A, B3)	03/90-08/91	6A	101	330337, 330342	330327	330127, 330286, 330297, 330687		
2.0 E quattro	(89, 89Q, 8A, B3)	08/88-09/90	3A	83	330322, 330337, 330341, 330342	330327	330268, 330284, 330297, 330308, 330687		
2.2	(81, 85, B2)	10/80-07/83	WE	85		330414			
2.3 E	Avant (8C, B4)	07/92-01/96	NG	98	330337, 330342	330327	330136, 330297, 330309		
2.6	Avant (8C, B4)	07/92-01/96	ABC	110	330342	330327	330127, 330297, 330687		
2.8	Avant (8C, B4)	09/91-01/96	AAH	128	330342	330327	330127, 330297, 330687		
RS2 quattro	Avant (8C, B4)	03/94-05/95	ADU	232	330337	330327	330115, 330309	330249	
90		**08/84 - 09/91**							
1.6 TD	(81, 85, B2)	10/85-01/87	CY	51	330322, 330337, 330342	330327	330157, 330284, 330297	330234	
	(89, 89Q, 8A, B3)	04/87-09/91	RA, SB	59	330322, 330337, 330341, 330342	330327	330103, 330150, 330157, 330284, 330285, 330297, 330309		
2.0	(81, 85, B2)	03/86-03/87	SK	83	330337, 330342	330327	330159, 330284, 330297	330234	
	(81, 85, B2)	10/84-03/87	HP, JS	85	330337, 330342	330327	330159, 330284, 330297	330234	
	(89, 89Q, 8A, B3)	07/88-09/91	PS	85	330337, 330342	330327	330127, 330136, 330159, 330284, 330297		
2.0 20 V	(89, 89Q, 8A, B3)	08/89-07/91	NM	118	330337, 330342	330327	330115, 330159, 330297		
2.0 20 V quattro	(89, 89Q, 8A, B3)	08/88-09/91	NM	118	330337, 330342	330327	330159, 330268, 330297		
2.2	(81, 85, B2)	01/85-03/87	KX	85	330337, 330342	330327	330159, 330297	330234	
	(81, 85, B2)	10/84-03/87	HY, KV	100	330337, 330342	330327	330159, 330284, 330297	330234	

OPS Oil Pressure Switches **BLS** Brake Light Switches **TT-RF** Temperature Transmitter and Radiator Fan Switches **RLS** Reverse Light Switches **VAR** Various

Vehicle		Date	Engine	kW	OPS	BLS	TT-RF	RLS	VAR
2.2 E	(89, 89Q, 8A, B3)	04/87-07/91	KV	100	330337, 330342	330327	330159, 330284, 330297		
2.2 E quattro	(81, 85, B2)	11/84-03/87	KV	100	330337, 330342	330327	330159, 330284, 330297	330234	
	(89, 89Q, 8A, B3)	04/87-09/91	KV	100	330337, 330342	330327	330159, 330268, 330284, 330297		
2.3 E	(89, 89Q, 8A, B3)	04/87-09/91	NG	98	330337, 330342	330327	330136, 330159, 330297		
	(89, 89Q, 8A, B3)	04/87-07/91	NG	100	330337, 330342	330327	330136, 330159, 330297		
2.3 E 20V	(89, 89Q, 8A, B3)	04/90-07/91	7A	123	330337, 330342	330327	330115, 330159, 330297		
	(89, 89Q, 8A, B3)	08/88-07/91	7A	125	330337, 330342	330327	330115, 330159, 330297		
2.3 E 20V quattro	(89, 89Q, 8A, B3)	06/88-09/91	7A	125	330337, 330342	330327	330159, 330268, 330297		
2.3 E quattro	(89, 89Q, 8A, B3)	04/87-09/91	NG	98	330337, 330342	330327	330159, 330268, 330297		
A1			**05/10 -**						
1.2 TFSI	(8X1)	05/10-	CBZA	63				330579	
1.4 TFSI	(8X1)	05/10-	CAXA	90				330579	
A2			**02/00 - 08/05**						
1.2 TDI	(8Z0)	03/01-08/05	ANY	45	330325	330706	330141, 330231	330264	
1.4	(8Z0)	02/00-08/05	AUA, BBY	55	330320	330706	330141, 330231, 330496	330579	
1.4 TDI	(8Z0)	02/00-08/05	AMF, BHC	55	330325	330706	330141, 330231, 330496	330264	
	(8Z0)	11/03-08/05	ATL	66	330325	330706	330141, 330231	330264	
1.6 FSI	(8Z0)	05/02-08/05	BAD	81	330320	330706	330141, 330231, 330546	330579	
A3			**09/96 -**						
1.2 TFSI	Convertible	03/10-	CBZB	77				330579	
1.2 TSI	(8P1)	04/10-	CBZB	77				330579	
	Sportback (8PA)	04/10-	CBZB	77				330579	
1.4 TFSI	(8P1)	09/07-	CAXC	92	330320		330230, 330546	330579	
	Sportback (8PA)	09/07-	CAXC	92	330320		330230, 330546	330579	
1.6	(8L1)	09/96-08/00	AEH, AKL, APF	74	330322, 330324	330440, 330706	330141, 330161, 330199, 330230, 330280, 330282, 330496, 330497, 330546	330261, 330264, 330544, 330744	
	(8L1)	08/00-	AVU, BFQ	75	330324	330440, 330706, 330725	330141, 330546	330264, 330544, 330579	
	(8P1)	05/03-	BGU	75	330324	330503, 330545	330230, 330546	330579	
	Convertible	09/08-	BSE	75				330579	
	Sportback (8PA)	09/04-	BGU	75	330324	330503, 330545	330230, 330546	330579	
1.6 FSI	(8P1)	08/03-	BAG, BLP	85	330320	330503, 330545	330230, 330546	330579	
	Sportback (8PA)	09/04-	BLP	85	330320	330503, 330545	330230, 330546	330579	

OPS Oil Pressure Switches **BLS** Brake Light Switches **TT-RF** Temperature Transmitter and Radiator Fan Switches **RLS** Reverse Light Switches **VAR** Various

ERA S.p.A. Moncalieri (TO) Italy - tel: +39 011 6891511 - fax: +39 011 6472862 - www.eranet.it

Vehicle		Date	Engine	kW	OPS	BLS	TT-RF	RLS	VAR
1.8	(8L1)	09/96-	AGN, APG	92	330322, 330324	330440, 330706, 330725	330141, 330161, 330199, 330230, 330280, 330282, 330496, 330497	330261, 330264, 330544, 330579, 330744	
1.8 quattro	(8L1)	08/98-	AGN	92	330322, 330324	330440	330141, 330161, 330199, 330230, 330280, 330282, 330496, 330497	330261, 330264, 330544	
1.8 T	(8L1)	12/96-	AGU, AQA, ARZ, AUM	110	330322, 330324	330440, 330706, 330725	330141, 330161, 330199, 330230, 330280, 330282, 330496, 330497	330261, 330264, 330544, 330579, 330744	
	(8L1)	12/98-	AJQ, APP, ARY, AUQ	132	330324	330440, 330706, 330725	330141, 330161, 330199, 330230, 330280, 330282, 330496, 330497	330261, 330264, 330544, 330579, 330744	
1.8 T quattro	(8L1)	12/96-	AGU, AQA, ARX	110	330322, 330324	330440, 330706, 330725	330141, 330161, 330199, 330230, 330280, 330282, 330496, 330497	330261, 330264, 330544, 330579, 330744	
	(8L1)	10/98-	AJQ, ARY	132	330324	330440, 330706, 330725	330141, 330161, 330199, 330230, 330280, 330282, 330496, 330497	330261, 330264, 330544, 330579, 330744	
1.8 TFSI	(8P1)	11/06-	BYT	118	330324	330503, 330545	330546	330264	
	Convertible	04/08-	BZB	118	330324		330546	330264	
	Sportback (8PA)	11/06-	BYT	118	330324	330503, 330545	330546	330264	
1.9 TDI	(8L1)	09/96-07/01	AGR, ALH	66	330325, 330341	330440, 330706, 330725	330141, 330161, 330199, 330230, 330280, 330282, 330496, 330497	330261, 330264, 330544, 330579, 330744	
	(8L1)	10/00-	ATD, AXR	74	330325	330440, 330725	330141, 330199, 330230, 330280	330264, 330544, 330579	
	(8P1)	05/03-	BKC	77	330325	330503, 330545	330230, 330546	330264	
	Convertible	04/08-	BLS	77	330325	330503, 330545	330546	330264	
	Sportback (8PA)	09/04-	BKC	77	330325	330503, 330545	330230, 330546	330264	
	(8L1)	08/97-07/01	AHF, ASV	81	330325, 330341	330440, 330706, 330725	330141, 330161, 330164, 330199, 330230, 330280, 330282, 330496, 330497	330261, 330264, 330544, 330579, 330744	
	(8L1)	08/00-	ASZ	96	330325	330440, 330706, 330725	330141, 330199, 330230, 330280, 330282	330264, 330544, 330579	
1.9 TDI quattro	(8L1)	08/00-	ASZ	96	330325	330440, 330706, 330725	330141, 330199, 330230, 330280, 330282	330264, 330544, 330579	
2.0	(8P1)	06/06-	--	120	330325	330503, 330545	330546		
	Sportback (8PA)	06/06-	--	120	330325	330503, 330545	330546		
2.0 FSI	(8P1)	05/03-	AXW, BLR, BLX, BLY, BMB, BVY, BVZ	110		330503, 330545	330546	330264	
	Sportback (8PA)	09/04-	BLR, BLX, BLY, BMB, BVY, BVZ	110		330503, 330545	330546	330264	
2.0 TDI	(8P1)	05/03-	AZV	100	330325	330503, 330545	330546	330579	
	Convertible	04/08-	CBAA	100				330579	

OPS Oil Pressure Switches **BLS** Brake Light Switches **TT-RF** Temperature Transmitter and Radiator Fan Switches **RLS** Reverse Light Switches **VAR** Various

Vehicle		Date	Engine	kW	OPS	BLS	TT-RF	RLS	VAR
2.0 TDI	Sportback (8PA)	09/04-	AZV	100	330325	330503, 330545	330546	330579	
	(8P1)	06/05-	BMM	103	330325	330503, 330545	330546	330579	
	Convertible	04/08-	CBAB	103				330579	
	Sportback (8PA)	06/05-	BMM	103	330325	330503, 330545	330546	330579	
	(8P1)	06/06-06/08	BUY	120				330579	
	Sportback (8PA)	06/06-06/08	BUY	120				330579	
	(8P1)	03/06-	BMN	125	330325	330503, 330545	330546	330579	
	Sportback (8PA)	03/06-	BMN	125	330325	330503, 330545	330546	330579	
2.0 TDI quattro	(8P1)	01/06-	BMM	103	330325	330503, 330545	330546	330579	
	Sportback (8PA)	01/06-	BMM	103	330325	330503, 330545	330546	330579	
2.0 TDI 16V	(8P1)	05/03-	BKD	103	330325	330503, 330545	330546	330579	
	Sportback (8PA)	09/04-	BKD	103	330325	330503, 330545	330546	330579	
2.0 TDI 16V quattro	(8P1)	08/04-	BKD	103	330325	330503, 330545	330546	330579	
	Sportback (8PA)	11/05-	BKD	103	330325	330503, 330545	330546	330579	
2.0 TDI quattro	(8P1)	05/03-	AZV	100	330325	330503, 330545	330546	330579	
	(8P1)	03/06-	BMN	125	330325	330503, 330545	330546	330579	
	Sportback (8PA)	03/06-	BMN	125	330325	330503, 330545	330546	330579	
2.0 TFSI	(8P1)	09/04-	AXX	147	330324	330503, 330545	330546	330579	
	Convertible	04/08-	CAWB	147	330324		330546	330579	
	Sportback (8PA)	09/04-	AXX	147	330324	330503, 330545	330546	330579	
2.0 TFSI quattro	(8P1)	09/04-	AXX	147		330503, 330545	330546	330579	
	Sportback (8PA)	09/04-	AXX	147		330503, 330545	330546	330579	
3.2 V6 quattro	(8P1)	07/03-	BDB, BMJ	184	330321, 330541	330503, 330545	330546	330579	
	Sportback (8PA)	09/04-	BMJ	184	330321, 330541	330503, 330545	330546	330579	
S3 quattro	(8L1)	03/99-	AMK, APY, AUL	154	330324	330440, 330706, 330725	330141, 330161, 330199, 330230, 330280, 330282, 330497	330261, 330264, 330544, 330579, 330744	
	(8L1)	10/01-	BAM	165	330324	330440, 330725	330141, 330161, 330199, 330230, 330280	330264, 330544, 330579	
	(8P1)	02/07-	BZC	188		330503, 330545	330546	330264, 330579	
	Sportback (8PA)	07/08-	CDLC	188				330579	
	(8P1)	11/06-	BHZ	195		330503, 330545	330546	330264, 330579	
	Sportback (8PA)	06/08-	BHZ	195		330503, 330545	330546	330264, 330579	
A4			**11/94 -**						
1.6	(8D2, B5)	11/94-10/00	ADP, AHL, ANA, ARM	74	330322, 330324	330327, 330328	330141, 330231, 330286, 330297, 330496, 330497, 330636, 330687	330753	
	Avant (8D5, B5)	11/94-09/01	ADP, AHL, ANA, ARM	74	330322, 330324	330327, 330328	330141, 330231, 330286, 330297, 330496, 330497, 330636, 330687	330753	
	(8D2, B5)	07/00-11/00	ALZ	75	330322, 330324	330327, 330328, 330725	330141, 330231, 330297, 330497	330753	

OPS Oil Pressure Switches **BLS** Brake Light Switches **TT-RF** Temperature Transmitter and Radiator Fan Switches **RLS** Reverse Light Switches **VAR** Various

ERA S.p.A. Moncalieri (TO) Italy - tel: +39 011 6891511 - fax: +39 011 6472862 - www.eranet.it

Vehicle		Date	Engine	kW	OPS	BLS	TT-RF	RLS	VAR
1.6	(8E2, B6)	11/00-12/04	ALZ	75	330324	330545, 330725	330141, 330546	330753	
	(8EC, B7)	11/04-06/08	ALZ	75	330324	330545, 330725	330141	330753	
	Avant (8D5, B5)	07/00-09/01	ALZ	75	330322, 330324	330327, 330328, 330725	330141, 330231, 330297, 330497	330753	
	Avant (8E5, B6)	09/01-12/04	ALZ	75	330324	330545, 330725	330141, 330546	330753	
	Avant (8ED, B7)	11/04-06/08	ALZ	75	330324	330545, 330725	330141	330753	
1.8	(8D2, B5)	04/95-11/00	AFY	85	330322, 330324	330327, 330328	330141, 330231, 330286, 330297, 330497, 330636, 330687	330753	
	Avant (8D5, B5)	07/95-09/01	AFY	85	330322, 330324	330327, 330328	330141, 330231, 330286, 330297, 330497, 330636, 330687	330753	
	(8D2, B5)	01/95-11/00	ADR, APT, ARG, AVV	92	330322, 330324	330327, 330328	330141, 330231, 330286, 330297, 330496, 330497, 330636, 330687	330753	
	Avant (8D5, B5)	02/96-09/01	ADR, APT, ARG, AVV	92	330322, 330324	330327, 330328	330141, 330231, 330286, 330297, 330496, 330497, 330636, 330687	330753	
1.8 quattro	(8D2, B5)	07/95-11/00	AFY	85	330322, 330324	330327, 330328	330141, 330231, 330286, 330297, 330497, 330636, 330687	330753	
	Avant (8D5, B5)	07/95-09/01	AFY	85	330322, 330324	330327, 330328	330141, 330231, 330286, 330297, 330497, 330636, 330687	330753	
	(8D2, B5)	01/95-11/00	ADR, APT, ARG	92	330322, 330324	330327, 330328	330141, 330231, 330286, 330297, 330497, 330636, 330687	330753	
	Avant (8D5, B5)	01/96-09/01	ADR, APT, ARG	92	330322, 330324	330327, 330328	330141, 330231, 330286, 330297, 330496, 330497, 330636, 330687	330753	
1.8 T	(8D2, B5)	01/95-11/00	AEB, ANB, APU, ARK, AWT	110	330322, 330324	330327, 330328	330141, 330231, 330286, 330297, 330496, 330497, 330636, 330687	330753	
	(8E2, B6)	11/00-07/02	AVJ	110	330324	330545, 330725	330141, 330546	330753	
	Avant (8D5, B5)	03/96-09/01	AEB, ANB, APU, ARK, AWT	110	330322, 330324	330327, 330328	330141, 330231, 330286, 330297, 330496, 330497, 330636, 330687	330753	
	Avant (8E5, B6)	09/01-07/02	AVJ	110	330324	330545, 330725	330141, 330546	330753	
	(8E2, B6)	07/02-12/04	BFB, BKB	120	330324	330545, 330725	330141, 330546	330748, 330753	
	(8EC, B7)	11/04-06/08	BFB	120	330324	330545, 330725	330141	330748, 330753	
	Avant (8E5, B6)	07/02-12/04	BFB	120	330324	330545, 330725	330141, 330546	330748, 330753	
	Avant (8ED, B7)	11/04-06/08	BFB	120	330324	330545, 330725	330141	330748, 330753	
	Convertible (8H7, B6, 8HE, B7)	07/02-03/09	BFB	120	330324	330545, 330725	330141, 330546	330748, 330753	
	(8E2, B6)	07/01-12/04	AMB	125	330324	330545, 330725	330141, 330546	330753	

OPS Oil Pressure Switches **BLS** Brake Light Switches **TT-RF** Temperature Transmitter and Radiator Fan Switches **RLS** Reverse Light Switches **VAR** Various

Vehicle		Date	Engine	kW	OPS	BLS	TT-RF	RLS	VAR
1.8 T	(8D2, B5)	12/97-11/00	AJL	132	330322, 330324	330327, 330328	330141, 330231, 330286, 330297, 330496, 330497, 330687	330753	
	Avant (8D5, B5)	12/97-09/01	AJL	132	330322, 330324	330327, 330328	330141, 330231, 330286, 330297, 330496, 330497, 330687	330753	
	(8E2, B6)	11/02-12/04	BEX	140	330324	330545, 330725	330141, 330546	330748	
	Avant (8E5, B6)	11/02-12/04	BEX	140	330324	330545, 330725	330141, 330546	330748	
1.8 T quattro	(8D2, B5)	01/95-11/00	AEB, ANB, APU, ARK, AWT	110	330322, 330324	330327, 330328	330141, 330231, 330286, 330297, 330496, 330497, 330636, 330687	330753	
	(8E2, B6)	11/00-07/02	AVJ	110	330324	330545, 330725	330141, 330546	330753	
	Avant (8D5, B5)	01/96-09/01	AEB, ANB, APU, ARK, AWT	110	330322, 330324	330327, 330328	330141, 330231, 330286, 330297, 330496, 330497, 330636, 330687	330753	
	Avant (8E5, B6)	09/01-07/02	AVJ	110	330324	330545, 330725	330141, 330546	330753	
	(8E2, B6)	07/02-12/04	BFB	120	330324	330545, 330725	330141, 330546	330748, 330753	
	(8EC, B7)	11/04-06/08	BFB	120	330324	330545, 330725	330141	330748, 330753	
	Avant (8E5, B6)	07/02-12/04	BFB	120	330324	330545, 330725	330141, 330546	330748, 330753	
	Avant (8ED, B7)	11/04-06/08	BFB	120	330324	330545, 330725	330141	330748, 330753	
	Convertible (8H7, B6, 8HE, B7)	05/03-03/09	BFB	120	330324	330545, 330725	330141, 330546	330748, 330753	
	(8E2, B6)	07/01-12/04	AMB	125	330324	330545, 330725	330141, 330546	330753	
	Avant (8E5, B6)	09/01-12/04	AMB	125	330324	330545, 330725	330141, 330546	330753	
	(8D2, B5)	12/97-11/00	AJL	132	330322, 330324	330327, 330328	330141, 330231, 330297, 330496, 330497, 330687	330753	
	Avant (8D5, B5)	12/97-09/01	AJL	132	330322, 330324	330327, 330328	330141, 330231, 330297, 330496, 330497, 330687	330753	
	(8E2, B6)	11/02-12/04	BEX	140	330324	330545, 330725	330141, 330546	330748	
	Avant (8E5, B6)	11/02-12/04	BEX	140	330324	330545, 330725	330141, 330546	330748	
1.8 TFSI	(8K2, B8)	01/08-	CABA	88	330325		330546		
	(8K2, B8)	11/07-	CABB	118	330325		330546		
1.9 DUO	Avant (8D5, B5)	03/98-09/01	AHU	66			330636, 330687	330753	
1.9 TDI	(8D2, B5)	12/95-11/00	AFF	55	330321, 330341, 330342	330327, 330328	330141, 330231, 330286, 330297, 330496, 330497, 330636, 330687	330753	
	Avant (8D5, B5)	03/96-09/01	AFF	55	330321, 330341, 330342	330327, 330328	330141, 330231, 330286, 330297, 330496, 330497, 330636, 330687	330753	
	(8D2, B5)	01/95-11/00	1Z, AHH, AHU	66	330321, 330341, 330342	330327, 330328	330141, 330231, 330286, 330297, 330496, 330497, 330636, 330687	330753	

OPS Oil Pressure Switches **BLS** Brake Light Switches **TT-RF** Temperature Transmitter and Radiator Fan Switches **RLS** Reverse Light Switches **VAR** Various

ERA S.p.A. Moncalieri (TO) Italy - tel: +39 011 6891511 - fax: +39 011 6472862 - www.eranet.it

Vehicle		Date	Engine	kW	OPS	BLS	TT-RF	RLS	VAR
1.9 TDI	Avant (8D5, B5)	02/96-09/01	1Z, AHH, AHU	66	330321, 330341, 330342	330327, 330328	330141, 330231, 330286, 330297, 330496, 330497, 330636, 330687	330753	
	(8E2, B6)	05/01-12/04	AVB	74	330325	330545, 330725	330141	330753	
	Avant (8E5, B6)	11/01-12/04	AVB	74	330325	330545, 330725	330141	330753	
	(8D2, B5)	10/95-11/00	AFN, AVG	81	330321, 330341, 330342	330327, 330328	330141, 330231, 330286, 330297, 330496, 330497, 330636, 330687	330753	
	Avant (8D5, B5)	02/96-09/01	AFN, AVG	81	330321, 330341, 330342	330327, 330328	330141, 330231, 330286, 330297, 330496, 330497, 330636, 330687	330753	
	(8D2, B5)	03/00-11/00	AJM	85	330322, 330325	330328	330141, 330231, 330286, 330297, 330496, 330497, 330687	330753	
	(8E2, B6)	06/04-12/04	BKE	85	330325	330545, 330725	330141	330748, 330753	
	(8EC, B7)	11/04-06/08	BKE	85	330325	330545, 330725	330141	330748, 330753	
	Avant (8D5, B5)	03/00-09/01	AJM	85	330322, 330325	330328	330141, 330231, 330286, 330297, 330496, 330497, 330687	330753	
	Avant (8E5, B6)	06/04-12/04	BKE	85	330325	330545, 330725	330141	330748, 330753	
	Avant (8ED, B7)	11/04-06/08	BKE	85	330325	330545, 330725	330141	330748, 330753	
	(8E2, B6)	11/00-12/04	AVF, AWX	96	330325	330545, 330725	330141	330249, 330748, 330753	
	Avant (8E5, B6)	09/01-12/04	AVF, AWX	96	330325	330545, 330725	330141	330249, 330748, 330753	
1.9 TDI quattro	(8D2, B5)	09/96-11/00	AFN, AVG	81	330321, 330341, 330342	330327, 330328	330141, 330231, 330286, 330297, 330496, 330497, 330636, 330687	330753	
	Avant (8D5, B5)	09/96-09/01	AFN, AVG	81	330321, 330341, 330342	330327, 330328	330141, 330231, 330286, 330297, 330496, 330497, 330636, 330687	330753	
	(8D2, B5)	03/00-11/00	AJM, ATJ	85	330325	330328	330141, 330231, 330297, 330496, 330497	330249, 330753	
	Avant (8D5, B5)	03/00-09/01	AJM, ATJ	85	330325	330328	330141, 330231, 330297, 330496, 330497	330249, 330753	
	(8E2, B6)	11/01-12/04	AVF	96	330325	330545, 330725	330141	330249, 330748	
	Avant (8E5, B6)	11/01-12/04	AVF	96	330325	330545, 330725	330141	330249, 330748	
2.0	(8E2, B6)	11/00-12/04	ALT	96	330324	330545, 330725	330141, 330546	330748, 330753	
	(8EC, B7)	11/04-06/08	ALT	96	330324	330545, 330725	330141	330753	
	Avant (8E5, B6)	09/01-12/04	ALT	96	330324	330545, 330725	330141, 330546	330748, 330753	
	Avant (8ED, B7)	11/04-06/08	ALT	96	330324	330545, 330725	330141	330753	
	Convertible (8H7, B6, 8HE, B7)	09/04-12/05	ALT	96	330324	330545, 330725	330141	330748, 330753	
2.0 FSI	(8E2, B6)	07/02-12/04	AWA	110	330324	330545, 330725	330141, 330546	330753	

OPS Oil Pressure Switches **BLS** Brake Light Switches **TT-RF** Temperature Transmitter and Radiator Fan Switches **RLS** Reverse Light Switches **VAR** Various

Vehicle		Date	Engine	kW	OPS	BLS	TT-RF	RLS	VAR
2.0 FSI	Avant (8E5, B6)	07/02-12/04	AWA	110	330324	330545, 330725	330141, 330546	330753	
2.0 TDI	(8EC, B7)	09/05-09/06	BVG	89	330325	330545	330546		
	Avant (8ED, B7)	09/05-09/06	BVG	89	330325	330545	330546		
2.0 TDi	(8E2, B6)	11/05-10/07	BVF	93	330325	330545	330546		
2.0 TDI	(8EC, B7)	11/05-11/06	BVF	93	330325	330545, 330725	330546	330748	
	Avant (8ED, B7)	11/05-11/06	BVF	93	330325	330545, 330725	330546	330748	
	(8EC, B7)	11/04-06/08	BNA	100	330325	330545, 330725	330546	330748	
	(8K2, B8)	11/07-	CAGB	100	330325		330546		
	Avant (8ED, B7)	11/04-06/08	BNA	100	330325	330545, 330725	330546	330748	
	Avant (8K5, B8)	04/08-	CAGB	100	330325		330546		
	Convertible (8H7, B6, 8HE, B7)	01/06-03/09	BRC	100		330725		330748	
	(8EC, B7)	11/04-06/08	BPW	103	330325	330545, 330725	330141	330748	
	Avant (8ED, B7)	11/04-06/08	BPW	103	330325	330545, 330725	330141	330748	
	Convertible (8H7, B6, 8HE, B7)	01/06-03/09	BPW	103	330325	330545, 330725	330546	330748	
	(8K2, B8)	11/07-	CAGA	105	330325		330546		
	Avant (8K5, B8)	04/08-	CAGA	105	330325		330546		
	(8EC, B7)	06/06-06/08	BVA	120	330325	330545, 330725	330546	330748	
	(8K2, B8)	08/08-	CAHB	120	330325		330546		
	Avant (8ED, B7)	06/06-06/08	BVA	120	330325	330545, 330725	330546	330748	
	(8EC, B7)	06/06-06/08	BRD	125	330325	330545, 330725	330546	330748	
	(8K2, B8)	01/08-	CAHA	125	330325	330545	330546		
	Avant (8ED, B7)	06/06-06/08	BRD	125	330325	330545, 330725	330546	330748	
	Avant (8K5, B8)	04/08-	CAHA	125	330325		330546		
2.0 TDI 16V	(8EC, B7)	11/04-06/08	BLB, BRE	103	330325	330545, 330725	330546	330748	
	Avant (8ED, B7)	11/04-06/08	BLB, BRE	103	330325	330545, 330725	330546	330748	
2.0 TDI quattro	(8EC, B7)	01/06-06/08	BPW	103	330325	330545, 330725	330141	330748	
	Avant (8ED, B7)	01/06-06/08	BPW	103	330325	330545, 330725	330141	330748	
	(8EC, B7)	06/06-06/08	BVA	120	330325	330545, 330725	330546	330748	
	Avant (8ED, B7)	06/06-06/08	BVA	120	330325	330545, 330725	330546	330748	
	(8EC, B7)	06/06-06/08	BRD	125	330325	330545, 330725	330546	330748	
2.0 TDi quattro	(8K2, B8)	01/08-	CAHA	125	330325	330545	330546		
2.0 TDI quattro	Avant (8ED, B7)	06/06-06/08	BRD	125	330325	330545, 330725	330546	330748	
	Avant (8K5, B8)	08/08-	CAHA	125	330325		330546		
2.0 TFSI	(8EC, B7)	10/06-06/08	BYK	125		330545, 330725	330141, 330546	330748	
	Avant (8ED, B7)	10/06-06/08	BYK	125		330545, 330725	330141, 330546	330748	
	(8EC, B7)	11/04-06/08	BGB	147		330545, 330725	330141, 330546	330748	
	Avant (8ED, B7)	11/04-06/08	BGB	147		330545, 330725	330141, 330546	330748	
	(8EC, B7)	06/05-06/08	BUL	162		330545, 330725	330141, 330546	330748	
	Avant (8ED, B7)	06/05-06/08	BUL	162		330545, 330725	330141, 330546	330748	
2.0 TFSI 16V	Convertible (8H7, B6, 8HE, B7)	01/06-03/09	BWE	147		330545, 330725	330141, 330546	330748	

OPS Oil Pressure Switches **BLS** Brake Light Switches **TT-RF** Temperature Transmitter and Radiator Fan Switches **RLS** Reverse Light Switches **VAR** Various

ERA S.p.A. Moncalieri (TO) Italy - tel: +39 011 6891511 - fax: +39 011 6472862 - www.eranet.it

Vehicle		Date	Engine	kW	OPS	BLS	TT-RF	RLS	VAR
2.0 TFSI quattro	(8EC, B7)	11/04-06/08	BGB, BWE, BWT	147		330545, 330725	330141, 330546	330748	
	Avant (8ED, B7)	11/04-06/08	BGB, BWE	147		330545, 330725	330141, 330546	330748	
	Convertible (8H7, B6, 8HE, B7)	11/05-03/09	--	147		330545, 330725	330141, 330546	330748	
2.0 TFSI quattro	(8EC, B7)	06/05-06/08	BUL	162		330545, 330725	330141, 330546	330748	
	Avant (8ED, B7)	06/05-06/08	BUL	162		330545, 330725	330141, 330546	330748	
2.4	(8D2, B5)	07/95-07/97	AFM	110	330322, 330337	330327	330297, 330497, 330636, 330687	330753	
	Avant (8D5, B5)	07/95-07/97	AFM	110	330322, 330337	330327	330297, 330497, 330636, 330687	330753	
	(8D2, B5)	08/97-11/00	AJG, AMM, APZ	120	330322, 330324	330327, 330328	330141, 330231, 330297, 330496, 330497, 330687	330753	
	(8E2, B6)	09/01-12/04	AMM	120	330324	330545, 330725	330141, 330546	330748, 330753	
	Avant (8D5, B5)	08/97-09/01	AJG, AMM, APZ	120	330322, 330324	330327, 330328	330141, 330231, 330297, 330496, 330497, 330687	330753	
	Avant (8E5, B6)	09/01-12/04	AMM	120	330324	330545, 330725	330141, 330546	330748, 330753	
	Convertible (8H7, B6, 8HE, B7)	04/02-12/05	AMM	120	330324	330545, 330725	330141	330748, 330753	
	(8D2, B5)	03/97-11/00	AGA, ALF, AML, APS, ARJ	121	330322, 330324	330327, 330328	330141, 330231, 330297, 330496, 330497, 330687	330753	
	Avant (8D5, B5)	03/97-09/01	AGA, ALF, AML, APS, ARJ	121	330322, 330324	330327, 330328	330141, 330231, 330297, 330496, 330497, 330687	330753	
	(8E2, B6)	09/01-12/04	BDV	125	330324	330545, 330725	330141, 330546	330249, 330748, 330753	
	Avant (8E5, B6)	09/01-12/04	BDV	125	330324	330545, 330725	330141, 330546	330249, 330748, 330753	
	Convertible (8H7, B6, 8HE, B7)	04/02-12/05	BDV	125	330324	330545, 330725	330141	330748, 330753	
2.4 quattro	(8D2, B5)	08/97-11/00	APZ	120	330322, 330324	330327, 330328	330141, 330231, 330297, 330496, 330497, 330687	330753	
	Avant (8D5, B5)	08/97-09/01	APZ	120	330322, 330324	330327, 330328	330141, 330231, 330297, 330496, 330497, 330687	330753	
	(8D2, B5)	03/97-11/00	AGA, ALF, AML, APS, ARJ	121	330322, 330324	330327, 330328	330141, 330231, 330297, 330496, 330497, 330687	330753	
	Avant (8D5, B5)	03/97-09/01	AGA, ALF, AML, APS, ARJ	121	330322, 330324	330327, 330328	330141, 330231, 330297, 330496, 330497, 330687	330753	
2.5 TDI	(8D2, B5)	09/97-11/00	AFB, AKN	110	330321, 330341	330328	330141, 330231, 330297, 330496, 330497, 330644, 330687	330249, 330753	
	Avant (8D5, B5)	09/97-09/01	AFB, AKN	110	330321, 330341	330328	330141, 330231, 330297, 330496, 330497, 330644, 330687	330249, 330753	
	(8E2, B6)	08/01-07/02	AYM	114	330321	330545, 330725	330141, 330231, 330644	330249, 330748	
	Avant (8E5, B6)	09/01-07/02	AYM	114	330321	330545, 330725	330141, 330231, 330644	330249, 330748	

OPS Oil Pressure Switches **BLS** Brake Light Switches **TT-RF** Temperature Transmitter and Radiator Fan Switches **RLS** Reverse Light Switches **VAR** Various

Vehicle		Date	Engine	kW	OPS	BLS	TT-RF	RLS	VAR
2.5 TDI	(8E2, B6)	07/02-12/04	BCZ, BDG, BFC	120	330321	330545, 330725	330141, 330231, 330644	330748	
	(8EC, B7)	11/04-05/06	BDG	120	330321	330545, 330725	330141, 330231, 330644	330249, 330748	
	Avant (8E5, B6)	07/02-12/04	BCZ, BDG, BFC	120	330321	330545, 330725	330141, 330231, 330644	330748	
	Avant (8ED, B7)	11/04-05/06	BDG	120	330321	330545, 330725	330141, 330231, 330644	330249, 330748	
	Convertible (8H7, B6, 8HE, B7)	08/02-12/05	BCZ, BDG, BFC	120	330321	330545, 330725	330141, 330644	330748	
2.5 TDi	Avant (8E5, B6)	10/00-05/03	AKE	132		330725	330644	330748	
2.5 TDI quattro	(8D2, B5)	09/97-11/00	AFB, AKN	110	330321, 330341	330327, 330328	330141, 330231, 330297, 330496, 330497, 330644, 330687	330249	
	Avant (8D5, B5)	09/97-09/01	AFB, AKN	110	330321, 330341	330327, 330328	330141, 330231, 330297, 330496, 330497, 330644, 330687	330249	
	(8E2, B6)	11/00-12/04	AKE, BAU, BDH	132	330321	330545, 330725	330141, 330231, 330644	330249, 330748	
	Avant (8E5, B6)	09/01-12/04	AKE, BAU, BDH	132	330321	330545, 330725	330141, 330231, 330644	330249, 330748	
2.6	(8D2, B5)	01/96-07/97	ACZ	102	330322, 330337	330327	330297, 330497, 330636, 330687	330753	
	Avant (8D5, B5)	01/96-07/97	ACZ	102	330322, 330337	330327	330297, 330497, 330636, 330687	330753	
	(8D2, B5)	01/95-11/00	ABC	110	330322, 330337	330327	330297, 330497, 330636, 330687	330753	
	Avant (8D5, B5)	02/96-09/01	ABC	110	330322, 330337	330327	330297, 330497, 330636, 330687	330753	
2.6 quattro	(8D2, B5)	01/95-11/00	ABC	110	330322, 330337	330327, 330328	330297, 330497, 330636, 330687	330753	
	Avant (8D5, B5)	01/96-09/01	ABC	110	330322, 330337	330327, 330328	330297, 330497, 330636, 330687	330753	
2.7 TDI	(8EC, B7)	11/05-06/08	BSG	120	330321, 330541	330545, 330725	330546	330748	
	(8K2, B8)	11/07-	CAMB	120	330321				
2.7 TDi	Avant (8ED, B7)	11/05-03/08	BSG	120	330321, 330541	330545, 330725	330546	330748	
2.7 TDI	Avant (8K5, B8)	06/08-	CAMB	120	330321				
	(8EC, B7)	01/06-06/08	BPP	132	330321, 330541	330545, 330725	330546	330748	
	Avant (8ED, B7)	01/06-06/08	BPP	132	330321, 330541	330545, 330725	330546	330748	
	Convertible (8H7, B6, 8HE, B7)	06/06-03/09	BPP	132	330541	330545, 330725	330546	330748	
	(8K2, B8)	11/07-	CAMA	140	330321				
	Avant (8K5, B8)	04/08-	CAMA, CGKA	140	330321				
2.8	(8D2, B5)	09/95-07/97	AAH	128	330322, 330337	330327	330297, 330497, 330636, 330687	330753	
	Avant (8D5, B5)	03/96-09/96	AAH	128	330322, 330337	330327	330297, 330497, 330636, 330687	330753	
	Avant (8D5, B5)	03/99-09/00	ATX	140	330322, 330324	330327, 330328	330141, 330231, 330297, 330497	330753	
	(8D2, B5)	10/96-11/00	ACK, ALG, AMX, APR, AQD	142	330322, 330324, 330337	330327, 330328	330141, 330231, 330297, 330496, 330497, 330687	330753	

OPS Oil Pressure Switches **BLS** Brake Light Switches **TT-RF** Temperature Transmitter and Radiator Fan Switches **RLS** Reverse Light Switches **VAR** Various

ERA S.p.A. Moncalieri (TO) Italy - tel: +39 011 6891511 - fax: +39 011 6472862 - www.eranet.it

Vehicle		Date	Engine	kW	OPS	BLS	TT-RF	RLS	VAR
2.8	Avant (8D5, B5)	10/96-09/01	ACK, ALG, AMX, APR, AQD	142	330322, 330324, 330337	330327, 330328	330141, 330231, 330297, 330496, 330497, 330687	330753	
2.8 quattro	(8D2, B5)	01/95-07/97	AAH	128	330322, 330337	330327, 330328	330297, 330497, 330636, 330687	330753	
	Avant (8D5, B5)	01/96-09/96	AAH	128	330322, 330337	330327, 330328	330297, 330497, 330636, 330687	330753	
	Avant (8D5, B5)	03/99-09/00	ATX	140	330322, 330324	330327, 330328	330141, 330231, 330297, 330497	330753	
	(8D2, B5)	10/96-11/00	ACK, ALG, AMX, APR, AQD	142	330322, 330324, 330337	330327, 330328	330141, 330231, 330297, 330496, 330497, 330687	330753	
	Avant (8D5, B5)	10/96-09/01	ACK, ALG, AMX, APR, AQD	142	330322, 330324, 330337	330327, 330328	330141, 330231, 330297, 330496, 330497, 330687	330753	
3.0	(8E2, B6)	04/01-12/04	BBJ	160	330324	330545, 330725	330141, 330546	330249, 330748, 330753	
	(8EC, B7)	11/04-05/06	BBJ	160	330324	330545, 330725	330141	330748	
	Avant (8E5, B6)	04/01-12/04	BBJ	160	330324	330545, 330725	330141, 330546	330249, 330748, 330753	
	Avant (8ED, B7)	11/04-05/06	BBJ	160	330324	330545, 330725	330141	330748	
	(8E2, B6)	11/00-12/04	ASN, AVK	162	330324	330545, 330725	330141, 330546	330249, 330748, 330753	
	Avant (8E5, B6)	09/01-12/04	ASN	162	330324	330545, 330725	330141, 330546	330249, 330748, 330753	
	Convertible (8H7, B6, 8HE, B7)	04/02-12/05	ASN	162	330324	330545, 330725	330141	330748, 330753	
3.0 quattro	(8E2, B6)	04/01-12/04	BBJ	160	330324	330545, 330725	330141, 330546	330249, 330748, 330753	
	(8EC, B7)	11/04-07/06	BBJ	160	330324	330545, 330725	330141	330748	
	Avant (8E5, B6)	04/01-12/04	BBJ	160	330324	330545, 330725	330141, 330546	330249, 330748, 330753	
	Avant (8ED, B7)	11/04-07/06	BBJ	160	330324	330545, 330725	330141	330748	
	(8E2, B6)	11/00-12/04	ASN, AVK	162	330324	330545, 330725	330141, 330546	330249, 330748, 330753	
	Avant (8E5, B6)	09/01-12/04	ASN, AVK	162	330324	330545, 330725	330141, 330546	330249, 330748, 330753	
	Convertible (8H7, B6, 8HE, B7)	05/03-12/05	ASN	162	330324	330545, 330725	330141	330748, 330753	
3.0 TDI quattro	(8EC, B7)	11/04-06/08	BKN	150	330321, 330541	330545, 330725	330546	330748	
	Avant (8ED, B7)	11/04-06/08	BKN	150	330321, 330541	330545, 330725	330546	330748	
	Convertible (8H7, B6, 8HE, B7)	01/06-03/09	BKN	150	330541	330545, 330725	330546	330748	
	(8EC, B7)	01/06-06/08	ASB	171	330321, 330541	330545, 330725	330546	330748	
	Avant (8ED, B7)	01/06-06/08	ASB	171	330321, 330541	330545, 330725	330546	330748	
	Convertible (8H7, B6, 8HE, B7)	01/06-03/09	ASB	171	330541	330545, 330725	330546	330748	
	(8K2, B8)	11/07-	CAPA, CCWA	176	330321				
	Avant (8K5, B8)	04/08-	CAPA, CCWA	176	330321				
3.2 FSI	(8EC, B7)	01/05-06/08	AUK	188		330545, 330725	330546	330748	
	Avant (8ED, B7)	01/05-06/08	AUK	188		330545, 330725	330546	330748	
	Convertible (8H7, B6, 8HE, B7)	01/06-03/09	AUK	188		330545, 330725	330546	330748	
3.2 FSI quattro	(8EC, B7)	01/05-06/08	AUK, BKH	188		330545, 330725	330546	330748	

OPS Oil Pressure Switches **BLS** Brake Light Switches **TT-RF** Temperature Transmitter and Radiator Fan Switches **RLS** Reverse Light Switches **VAR** Various

Vehicle		Date	Engine	kW	OPS	BLS	TT-RF	RLS	VAR
3.2 FSI quattro	Avant (8ED, B7)	01/05-06/08	AUK	188		330545, 330725	330546	330748	
	Convertible (8H7, B6, 8HE, B7)	01/06-03/09	AUK	188		330545, 330725	330546	330748	
	(8K2, B8)	11/07-	CALA	195	330541		330546		
	Avant (8K5, B8)	04/08-	CALA	195	330541		330546		
RS4 quattro	(8EC, B7)	09/05-06/08	BNS	309		330725		330748	
	Avant (8ED, B7)	09/05-06/08	BNS	309		330725		330748	
	Convertible (8H7, B6, 8HE, B7)	06/06-03/09	BNS	309		330725		330748	
S4 quattro	(8D2, B5)	09/97-11/00	AGB	195	330322, 330324	330327, 330328	330141, 330231, 330297, 330496, 330497, 330687	330249	
	Avant (8D5, B5)	09/97-09/01	AGB	195	330322, 330324	330327, 330328	330141, 330231, 330297, 330496, 330497, 330687	330249	
	(8E2, B6)	03/03-12/04	BBK	253	330324	330545, 330725	330141	330748	
	(8EC, B7)	11/04-06/08	BBK, BHF	253	330324	330545, 330725	330141	330748	
	Avant (8E5, B6)	03/03-12/04	BBK	253	330324	330545, 330725	330141	330748	
	Avant (8ED, B7)	11/04-06/08	BBK	253	330324	330545, 330725	330141	330748	
	Convertible (8H7, B6, 8HE, B7)	03/04-03/09	BBK	253	330324	330545, 330725	330141	330748	
A5			**06/07 -**						
1.8 TFSI	(8T3)	10/07-	CABD	125	330325		330546		
2.7 TDI	(8T3)	06/07-	CAMA	140	330321				
3.0 TDI quattro	(8T3)	06/07-	CAPA	176	330321				
3.2 FSI	(8T3)	06/07-	CALA	195	330541		330546		
3.2 FSI quattro	(8T3)	06/07-	CALA	195	330541		330546		
S5 quattro	(8T3)	06/07-	CAUA	260			330546		
A6			**06/94 - 08/11**						
1.8	(4B, C5)	05/97-01/05	AFY	85	330322	330327, 330328	330141, 330231, 330497, 330687	330753	
	Avant (4B, C5)	02/98-01/05	AFY	85	330322	330327, 330328	330141, 330231, 330497, 330687	330753	
	(4A, C4)	12/95-10/97	ADR	92	330322	330327, 330328	330636, 330687	330753	
	(4B, C5)	07/97-01/05	AJP, ANQ, AQE, ARH	92	330321, 330322, 330324	330327, 330328	330141, 330231, 330497, 330687	330753	
	Avant (4A, C4)	12/95-12/97	ADR	92	330322	330327, 330328	330636, 330687	330753	
	Avant (4B, C5)	12/97-01/05	AJP, AQE, ARH	92	330321, 330322, 330324	330327, 330328	330141, 330231, 330497, 330687	330753	
1.8 quattro	(4A, C4)	12/95-10/97	ADR	92	330322	330328	330150, 330286, 330687		
	Avant (4A, C4)	12/95-12/97	ADR	92	330322	330328	330150, 330286, 330687		
1.8 T	(4B, C5)	01/97-01/05	AEB, ANB, APU, ARK, AWL, AWT	110	330322, 330324	330327, 330328, 330545, 330725	330141, 330231, 330496, 330497, 330687	330753	
	Avant (4B, C5)	12/97-01/05	AEB, ANB, APU, ARK, AWT	110	330322, 330324	330327, 330328, 330545, 330725	330141, 330231, 330496, 330497, 330687	330753	

OPS Oil Pressure Switches **BLS** Brake Light Switches **TT-RF** Temperature Transmitter and Radiator Fan Switches **RLS** Reverse Light Switches **VAR** Various

ERA S.p.A. Moncalieri (TO) Italy - tel: +39 011 6891511 - fax: +39 011 6472862 - www.eranet.it

Vehicle		Date	Engine	kW	OPS	BLS	TT-RF	RLS	VAR
1.8 T	(4B, C5)	12/97-01/05	AJL	132	330322, 330324	330327, 330328	330141, 330231, 330496, 330497, 330687	330753	
	Avant (4B, C5)	04/99-01/05	AJL	132	330322, 330324	330327, 330328	330141, 330231, 330496, 330497, 330687	330753	
1.8 T quattro	(4B, C5)	02/97-01/05	AEB, ANB, APU, ARK, AWT	110	330322, 330324	330327, 330328, 330545, 330725	330141, 330231, 330496, 330497, 330687	330753	
	Avant (4B, C5)	12/97-01/05	AEB, ANB, APU, ARK, AWT	110	330322, 330324	330327, 330328, 330545, 330725	330141, 330231, 330496, 330497, 330687	330753	
	(4B, C5)	12/97-01/05	AJL	132	330322, 330324	330327, 330328	330141, 330231, 330496, 330497, 330687	330753	
	Avant (4B, C5)	12/97-01/05	AJL	132	330322, 330324	330327, 330328	330141, 330231, 330496, 330497, 330687	330753	
1.9 TDI	(4A, C4)	06/94-10/97	1Z, AHU	66	330341	330327, 330328	330150, 330286, 330309, 330687	330753	
	Avant (4A, C4)	06/94-12/97	1Z, AHU	66	330341	330327, 330328	330150, 330286, 330309, 330687	330753	
	(4B, C5)	04/97-10/00	AFN, AVG	81	330322, 330324	330327, 330328	330141, 330231, 330497, 330687	330753	
	Avant (4B, C5)	02/98-04/01	AFN, AVG	81	330322, 330324	330327, 330328	330141, 330231, 330497, 330687	330753	
	(4B, C5)	07/00-01/05	AJM	85	330321	330327, 330328	330141, 330231, 330497	330753	
	Avant (4B, C5)	07/00-01/05	AJM	85	330321	330327, 330328	330141, 330231, 330497	330753	
	(4B, C5)	08/01-01/05	AVF, AWX	96	330325	330328, 330545, 330725	330141, 330231	330748, 330753	
	Avant (4B, C5)	08/01-01/05	AVF, AWX	96	330325	330328, 330545, 330725	330141, 330231	330748, 330753	
2.0	(4A, C4)	06/94-10/97	AAE	74	330322	330327, 330328	330150, 330286, 330309, 330687	330753	
	Avant (4A, C4)	06/94-12/97	AAE	74	330322	330327, 330328	330150, 330286, 330309, 330687	330753	
	(4A, C4)	08/95-07/96	ADW	79	330322	330327, 330328	330150, 330286, 330309, 330687	330753	
	Avant (4A, C4)	08/95-07/96	ADW	79	330322	330327, 330328	330150, 330286, 330309, 330687	330753	
	(4A, C4)	06/94-10/97	ABK	85	330322	330327, 330328	330150, 330286, 330309, 330687	330753	
	Avant (4A, C4)	06/94-12/97	ABK	85	330322	330327, 330328	330150, 330286, 330309, 330687	330753	
	(4B, C5)	08/01-01/05	ALT	96	330324	330328, 330545, 330725	330546	330753	
	Avant (4B, C5)	08/01-01/05	ALT	96	330324	330328, 330545, 330725	330546	330753	
2.0 16V	(4A, C4)	06/94-10/97	ACE	103	330322	330327, 330328	330127, 330687	330753	
	Avant (4A, C4)	06/94-12/97	ACE	103	330322	330327, 330328	330127, 330687	330753	
2.0 16V quattro	(4A, C4)	06/94-10/97	ACE	103	330322	330328	330127, 330687		
	Avant (4A, C4)	06/94-12/97	ACE	103	330322	330328	330127, 330687		
2.0 TDI	(4F2, C6)	09/05-06/06	BVG	89	330325	330545, 330725	330546	330748	

OPS Oil Pressure Switches **BLS** Brake Light Switches **TT-RF** Temperature Transmitter and Radiator Fan Switches **RLS** Reverse Light Switches **VAR** Various

Vehicle		Date	Engine	kW	OPS	BLS	TT-RF	RLS	VAR
2.0 TDI	Avant (4F5, C6)	09/05-06/06	BVG	89	330325	330545, 330725	330546	330748	
	(4F2, C6)	07/04-03/11	BNA, BRF	100	330325	330545, 330725	330546	330748	
	Avant (4F5, C6)	06/05-08/11	BNA, BRF	100	330325	330545, 330725	330546	330748	
	(4F2, C6)	07/04-10/08	BLB, BRE	103	330325	330545, 330725	330546	330748	
	Avant (4F5, C6)	06/05-10/08	BLB, BRE	103	330325	330545, 330725	330546	330748	
	(4F2, C6)	04/09-03/11	CAHB	120		330725		330748	
	Avant (4F5, C6)	04/09-08/11	CAHB	120		330725		330748	
	(4F2, C6)	11/08-03/11	CAHA	125		330725		330748	
	Avant (4F5, C6)	10/08-08/11	CAHA	125		330725		330748	
2.0 TFSI	(4F2, C6)	06/05-03/11	BPJ	125		330545, 330725	330546	330748	
	Avant (4F5, C6)	06/05-08/11	BPJ	125		330545, 330725	330546	330748	
2.3	(4A, C4)	06/94-12/95	AAR	98	330322, 330341	330327, 330328	330115, 330136, 330159		
	Avant (4A, C4)	06/94-12/95	AAR	98	330322, 330341	330327, 330328	330115, 330136, 330159		
2.3 quattro	(4A, C4)	06/94-12/95	AAR	98	330322	330327, 330328	330136, 330159		
	Avant (4A, C4)	06/94-12/95	AAR	98	330322	330327, 330328	330136, 330159		
2.4	(4B, C5)	07/98-01/05	ALW, ARN, ASM	100	330322, 330324	330327, 330328, 330545, 330725	330141, 330163, 330231, 330497, 330687	330249, 330748, 330753	
	Avant (4B, C5)	07/98-01/05	ALW, ARN, ASM	100	330322, 330324	330327, 330328, 330545, 330725	330141, 330163, 330231, 330497, 330687	330249, 330748, 330753	
	(4A, C4)	07/95-06/96	AFM	110	330322, 330337, 330342	330327, 330328	330127, 330497, 330636, 330687	330753	
	Avant (4A, C4)	07/96-12/97	AFM	110			330636, 330687	330753	
	(4B, C5)	02/97-01/05	APC	115	330322, 330324	330327, 330328	330141, 330231, 330496, 330497, 330687	330249, 330748, 330753	
	Avant (4B, C5)	12/97-01/05	APC	115	330322, 330324	330327, 330328	330141, 330231, 330496, 330497, 330687	330249, 330748, 330753	
	(4B, C5)	02/97-01/05	AJG, AMM, APZ	120	330322, 330324	330327, 330328, 330545, 330725	330141, 330163, 330231, 330497, 330687	330249, 330748, 330753	
	Avant (4B, C5)	12/97-01/05	AJG, AMM, APZ	120	330322, 330324	330327, 330328, 330545, 330725	330141, 330163, 330231, 330497, 330687	330249, 330748, 330753	
	(4B, C5)	02/97-01/05	AGA, ALF, AML, APS, ARJ	121	330322, 330324	330327, 330328	330141, 330231, 330497, 330687	330249, 330748, 330753	
	Avant (4B, C5)	12/97-01/05	AGA, ALF, AML, APS, ARJ	121	330322, 330324	330327, 330328	330141, 330231, 330497, 330687	330249, 330748, 330753	
	(4B, C5)	08/01-01/05	BDV	125	330324	330328, 330545, 330725	330141, 330163, 330231, 330687	330753	
	Avant (4B, C5)	08/01-01/05	BDV	125	330324	330328, 330545, 330725	330141, 330163, 330231, 330687	330753	
	(4F2, C6)	05/04-10/08	BDW	130		330545, 330725	330546	330748	
	Avant (4F5, C6)	03/05-10/08	BDW	130		330545, 330725	330546	330748	
2.4 quattro	(4B, C5)	08/98-07/99	APC	115	330322, 330324	330327, 330328	330141, 330231, 330497, 330687	330249, 330748, 330753	

OPS Oil Pressure Switches **BLS** Brake Light Switches **TT-RF** Temperature Transmitter and Radiator Fan Switches **RLS** Reverse Light Switches **VAR** Various

ERA S.p.A. Moncalieri (TO) Italy - tel: +39 011 6891511 - fax: +39 011 6472862 - www.eranet.it

Vehicle		Date	Engine	kW	OPS	BLS	TT-RF	RLS	VAR
2.4 quattro	Avant (4B, C5)	08/98-05/01	APC	115	330322, 330324	330327, 330328	330141, 330231, 330497, 330687	330249, 330748, 330753	
	(4B, C5)	02/97-01/05	AJG, APZ	120	330322, 330324	330327, 330328	330141, 330231, 330496, 330497, 330687	330249, 330748, 330753	
	Avant (4B, C5)	12/97-01/05	AJG, APZ	120	330322, 330324	330327, 330328	330141, 330231, 330496, 330497, 330687	330249, 330748, 330753	
	(4B, C5)	02/97-01/05	AGA, ALF, AML, APS, ARJ	121	330322, 330324	330327, 330328	330141, 330231, 330496, 330497, 330687	330249, 330748, 330753	
	Avant (4B, C5)	12/97-01/05	AGA, ALF, AML, APS, ARJ	121	330322, 330324	330327, 330328	330141, 330231, 330496, 330497, 330687	330249, 330748, 330753	
	(4B, C5)	08/01-01/05	BDV	125	330324	330328, 330545, 330725	330141, 330163, 330231, 330687	330753	
	Avant (4B, C5)	08/01-01/05	BDV	125	330324	330328, 330545, 330725	330141, 330163, 330231, 330687	330753	
	(4F2, C6)	01/05-10/08	BDW	130		330545, 330725	330546	330748	
	Avant (4F5, C6)	03/05-10/08	BDW	130		330545, 330725	330546	330748	
2.5 TDI	(4A, C4)	01/95-10/97	AAT	84	330341	330327, 330328	330115, 330687	330249, 330753	
	Avant (4A, C4)	01/95-12/97	AAT	84	330341	330327, 330328	330115, 330687	330249, 330753	
	(4A, C4)	06/94-10/97	AAT	85	330341	330327, 330328	330115, 330687	330249, 330753	
	Avant (4A, C4)	06/94-12/97	AAT	85	330341	330327, 330328	330115, 330687	330249, 330753	
	(4A, C4)	08/94-10/97	AEL	103	330341	330327, 330328	330115, 330687	330249, 330753	
	Avant (4A, C4)	08/94-12/97	AEL	103	330341	330327, 330328	330115, 330687	330249, 330753	
	(4B, C5)	07/97-01/05	AFB, AKN	110	330321, 330341	330327, 330328	330141, 330231, 330497, 330644, 330687	330249, 330748	
	Avant (4B, C5)	12/97-01/05	AFB, AKN	110	330321, 330341	330327, 330328	330141, 330231, 330497, 330644, 330687	330249, 330748	
	(4B, C5)	08/01-01/05	AYM	114	330321	330328, 330545, 330725	330141, 330231, 330644	330748, 330753	
	Avant (4B, C5)	08/01-01/05	AYM	114	330321	330328, 330545, 330725	330141, 330231, 330644	330748, 330753	
	(4B, C5)	07/02-01/05	BCZ, BDG, BFC	120	330321	330328, 330545, 330725	330141, 330231, 330644	330748	
	Avant (4B, C5)	07/02-01/05	BCZ, BDG, BFC	120	330321	330328, 330545, 330725	330141, 330231, 330644	330748	
	(4B, C5)	02/00-01/05	AKE, BAU, BDH, BND	132	330321, 330341	330327, 330328, 330545, 330725	330141, 330231, 330497, 330644, 330687	330249, 330748	
	Avant (4B, C5)	02/00-01/05	AKE, BAU, BDH	132	330321, 330341	330327, 330328, 330545, 330725	330141, 330231, 330497, 330644, 330687	330249, 330748	
2.5 TDI quattro	(4A, C4)	10/95-10/97	AEL	103	330341	330328	330115, 330687		
	Avant (4A, C4)	07/95-12/97	AEL	103	330341	330328	330115, 330687		
	(4B, C5)	07/97-01/05	AFB, AKN	110	330321, 330341	330327, 330328	330141, 330231, 330496, 330497, 330644, 330687	330249, 330748	
	Avant (4B, C5)	12/97-01/05	AFB, AKN	110	330321, 330341	330327, 330328	330141, 330231, 330496, 330497, 330644, 330687	330249, 330748	

OPS Oil Pressure Switches **BLS** Brake Light Switches **TT-RF** Temperature Transmitter and Radiator Fan Switches **RLS** Reverse Light Switches **VAR** Various

Vehicle		Date	Engine	kW	OPS	BLS	TT-RF	RLS	VAR
2.5 TDI quattro	(4B, C5)	02/00-01/05	AKE, BAU, BDH	132	330321, 330341	330327, 330328, 330545, 330725	330141, 330231, 330497, 330644, 330687	330249, 330748	
	Avant (4B, C5)	02/00-01/05	AKE, BAU, BDH	132	330321, 330341	330327, 330328, 330545, 330725	330141, 330231, 330497, 330644, 330687	330249, 330748	
2.6	(4A, C4)	06/94-10/97	ACZ	102	330322, 330337, 330342	330327, 330328	330127, 330497, 330636, 330687	330753	
	Avant (4A, C4)	06/94-02/97	ACZ	102	330322, 330337, 330342	330327, 330328	330127, 330497, 330636, 330687	330753	
	(4A, C4)	06/94-10/97	ABC	110	330322, 330337, 330342	330327, 330328	330127, 330497, 330636, 330687	330753	
	Avant (4A, C4)	06/94-12/97	ABC	110	330322, 330337, 330342	330327, 330328	330127, 330497, 330636, 330687	330753	
2.6 quattro	(4A, C4)	06/94-10/97	ABC	110	330322, 330337, 330342	330328	330127, 330687		
	Avant (4A, C4)	06/94-12/97	ABC	110	330322, 330337, 330342	330328	330127, 330687		
2.7 T	(4B, C5)	02/99-01/05	AJK	169	330322, 330324	330327, 330328	330141, 330163, 330231, 330496, 330497, 330687	330249	
	Avant (4B, C5)	02/99-01/05	AJK	169	330322, 330324	330327, 330328	330141, 330163, 330231, 330496, 330497, 330687	330249	
2.7 T quattro	(4B, C5)	12/97-01/05	AJK	169	330322, 330324	330327, 330328	330141, 330163, 330231, 330496, 330497, 330687	330249	
	Avant (4B, C5)	12/97-01/05	AJK, AZA	169	330322, 330324	330327, 330328	330141, 330163, 330231, 330496, 330497, 330687	330249, 330748	
	(4B, C5)	08/01-01/05	ARE, BES	184	330324	330328, 330545, 330725	330141, 330163, 330231	330748	
	Avant (4B, C5)	08/01-01/05	ARE, BES	184	330324	330328, 330545, 330725	330141, 330163, 330231	330748	
2.7 TDI	(4F2, C6)	11/04-03/11	BSG	120	330321, 330541	330545, 330725	330546	330748	
	Avant (4F5, C6)	03/05-08/11	BSG	120	330321, 330541	330545, 330725	330546	330748	
	(4F2, C6)	11/04-10/08	BPP	132	330321, 330541	330545, 330725	330546	330748	
	Avant (4F5, C6)	03/05-10/08	BPP	132	330321, 330541	330545, 330725	330546	330748	
	(4F2, C6)	10/08-03/11	CANA, CANC	140		330725			
	Avant (4F5, C6)	10/08-08/11	CANA, CANC	140		330725			
2.7 TDI quattro	(4F2, C6)	06/05-03/11	BSG	120	330321, 330541	330545, 330725	330546	330748	
	Avant (4F5, C6)	06/05-08/11	BSG	120	330321, 330541	330545, 330725	330546	330748	
	(4F2, C6)	11/04-10/08	BPP	132	330321, 330541	330545, 330725	330546	330748	
	Avant (4F5, C6)	03/05-10/08	BPP	132	330321, 330541	330545, 330725	330546	330748	
2.8	(4A, C4)	08/95-07/96	AEJ	120	330322, 330337, 330342	330327, 330328	330127, 330497, 330636, 330687	330753	
	Avant (4A, C4)	08/95-07/96	AEJ	120	330322, 330337, 330342	330327, 330328	330127, 330497, 330636, 330687	330753	
	(4A, C4)	06/94-10/97	AAH, AEJ, AFC	128	330322, 330337, 330342	330327, 330328	330127, 330497, 330636, 330687	330753	
	Avant (4A, C4)	06/94-12/97	AAH, AEJ	128	330322, 330337, 330342	330327, 330328	330127, 330497, 330636, 330687	330753	

OPS Oil Pressure Switches **BLS** Brake Light Switches **TT-RF** Temperature Transmitter and Radiator Fan Switches **RLS** Reverse Light Switches **VAR** Various

ERA S.p.A. Moncalieri (TO) Italy - tel: +39 011 6891511 - fax: +39 011 6472862 - www.eranet.it

Vehicle		Date	Engine	kW	OPS	BLS	TT-RF	RLS	VAR
2.8	(4B, C5)	10/97-07/98	AGE	132	330322, 330324	330327, 330328	330141, 330231, 330496, 330497, 330687	330249, 330748, 330753	
	Avant (4B, C5)	12/97-07/98	AGE	132	330322, 330324	330327, 330328	330141, 330231, 330496, 330497, 330687	330249, 330748, 330753	
	(4B, C5)	07/99-01/05	ATX, BBG	140	330322, 330324	330327, 330328	330141, 330231, 330497, 330687	330249, 330748, 330753	
	Avant (4B, C5)	07/99-01/05	ATX	140	330322, 330324	330327, 330328	330141, 330231, 330497, 330687	330249, 330748, 330753	
	(4A, C4)	12/95-10/97	ACK	142	330322, 330337, 330342	330327, 330328	330127, 330497, 330636, 330687	330753	
	(4B, C5)	02/97-01/05	ACK, ALG, AMX, APR, AQD	142	330322, 330324	330327, 330328	330141, 330231, 330496, 330497, 330687	330249, 330748, 330753	
	Avant (4A, C4)	12/95-12/97	ACK	142	330322, 330337, 330342	330327, 330328	330127, 330497, 330636, 330687	330753	
	Avant (4B, C5)	12/97-01/05	ACK, ALG, AMX, APR, AQD	142	330322, 330324	330327, 330328	330141, 330231, 330496, 330497, 330687	330249, 330748, 330753	
2.8 quattro	(4A, C4)	06/94-10/97	AAH, AEJ	128	330322, 330337, 330342	330328	330127, 330687		
	Avant (4A, C4)	06/94-12/97	AAH, AEJ	128	330322, 330337, 330342	330328	330127, 330687		
	(4B, C5)	01/98-04/00	AGE	132	330322, 330324	330327, 330328	330141, 330231, 330497, 330687	330249, 330748, 330753	
	(4B, C5)	07/99-05/01	ATX	140			330687	330748, 330753	
	(4A, C4)	12/95-10/97	ACK	142	330322, 330337, 330342	330328	330127, 330297, 330687	330753	
	(4B, C5)	02/97-01/05	ACK, ALG, AMX, APR, AQD	142	330322, 330324	330327, 330328	330141, 330231, 330496, 330497, 330687	330249, 330748, 330753	
	Avant (4A, C4)	12/95-12/97	ACK	142	330322, 330337, 330342	330328	330127, 330297, 330687	330753	
	Avant (4B, C5)	12/97-01/05	ACK, ALG, AMX, APR, AQD	142	330322, 330324	330327, 330328	330141, 330231, 330496, 330497, 330687	330249, 330748, 330753	
2.8 FSI	(4F2, C6)	10/08-03/11	CCDA	140		330725		330748	
	Avant (4F5, C6)	10/08-08/11	CCDA	140		330725		330748	
	(4F2, C6)	11/06-10/08	BDX	154	330541	330545, 330725	330546	330748	
	Avant (4F5, C6)	11/06-10/08	BDX	154	330541	330545, 330725	330546	330748	
2.8 FSI quattro	(4F2, C6)	10/08-03/11	CCDA	140		330725		330748	
	Avant (4F5, C6)	10/08-08/11	CCDA	140		330725		330748	
	(4F2, C6)	06/07-10/08	BDX	154	330541	330545, 330725	330546	330748	
	Avant (4F5, C6)	06/07-10/08	BDX	154	330541	330545, 330725	330546	330748	
3.0	(4F2, C6)	08/04-05/06	BBJ	160	330324	330545	330141		
	(4B, C5)	08/01-01/05	ASN	162	330324	330328, 330545, 330725	330141, 330163, 330231	330748, 330753	
	Avant (4B, C5)	08/01-01/05	ASN	162	330324	330328, 330545, 330725	330141, 330163, 330231	330748, 330753	
3.0 quattro	(4B, C5)	06/01-07/04	BBJ	160		330725		330748, 330753	
	(4F2, C6)	05/04-05/06	BBJ	160	330324	330545	330141		

OPS Oil Pressure Switches **BLS** Brake Light Switches **TT-RF** Temperature Transmitter and Radiator Fan Switches **RLS** Reverse Light Switches **VAR** Various

Vehicle		Date	Engine	kW	OPS	BLS	TT-RF	RLS	VAR
3.0 quattro	Avant (4F5, C6)	03/05-05/06	BBJ	160	330324	330545	330141		
	(4B, C5)	08/01-01/05	ASN	162	330324	330328, 330545, 330725	330141, 330163, 330231	330748, 330753	
	Avant (4B, C5)	08/01-01/05	ASN	162	330324	330328, 330545, 330725	330141, 330163, 330231	330748, 330753	
3.0 TDI	(4F2, C6)	06/06-03/11	ASB	171	330321, 330541	330545, 330725	330546	330748	
3.0 TDi	Avant (4F5, C6)	06/06-08/11	ASB	171	330321, 330541	330545, 330725	330546	330748	
3.0 TDI quattro	(4F2, C6)	05/04-03/11	BNG	155	330321, 330541	330545, 330725	330546	330748	
	Avant (4F5, C6)	03/05-08/11	BNG	155	330321, 330541	330545, 330725	330546	330748	
	(4F2, C6)	05/04-05/06	BMK	165	330321, 330541	330545, 330725	330546	330748	
	Avant (4F5, C6)	03/05-05/06	BMK	165	330321, 330541	330545, 330725	330546	330748	
	(4F2, C6)	06/06-10/08	ASB	171	330321, 330541	330545, 330725	330546	330748	
	Avant (4F5, C6)	06/06-10/08	ASB	171	330321, 330541	330545, 330725	330546	330748	
	(4F2, C6)	10/08-03/11	CDYA, CDYC	176	330541	330545, 330725	330546	330748	
	Avant (4F5, C6)	10/08-08/11	CDYA, CDYC	176	330541	330545, 330725	330546	330748	
3.0 TFSI quattro	(4F2, C6)	10/08-03/11	CAJA	213		330545			
	Avant (4F5, C6)	10/08-08/11	CAJA	213		330545			
3.2 FSI	(4F2, C6)	05/04-10/08	AUK	188		330545, 330725	330546	330748	
	Avant (4F5, C6)	03/05-10/08	AUK	188		330545, 330725	330546	330748	
3.2 FSI quattro	(4F2, C6)	09/06-10/08	BYU	183		330545	330546		
	(4F2, C6)	05/04-10/08	AUK, BKH	188		330545, 330725	330546	330748	
	Avant (4F5, C6)	03/05-10/08	AUK	188		330545, 330725	330546	330748	
4.2 quattro	(4B, C5)	11/98-01/05	ARS, ASG, AWN	220	330324	330327, 330328, 330545	330141, 330231, 330496		
	Avant (4B, C5)	11/98-01/05	ARS, ASG, AWN	220	330324	330327, 330328, 330545	330141, 330231, 330496		
	(4F2, C6)	05/04-05/06	BAT	246	330324	330545	330546	330748	
	Avant (4F5, C6)	03/05-08/11	BAT	246	330324	330545	330546	330748	
4.2 FSI quattro	(4F2, C6)	06/06-03/11	BVJ	257	330324	330545	330546		
	Avant (4F5, C6)	06/06-08/11	BVJ	257	330324	330545	330546		
S6 4.2 quattro	(4A, C4)	06/94-10/97	AEC	213	330337	330328	330115		
	Avant (4A, C4)	06/94-12/97	AEC	213	330337	330328	330115		
S6 quattro	(4B, C5)	09/99-01/05	ANK, AQJ	250	330324	330327, 330328, 330545, 330725	330141, 330231		
	Avant (4B, C5)	09/99-01/05	ANK, AQJ	250	330324	330327, 330328, 330545, 330725	330141, 330231		
	(4F2, C6)	03/06-03/11	BXA	320	330324	330545	330546		
	Avant (4F5, C6)	03/06-08/11	BXA	320	330324	330545	330546		
S6 Turbo quattro	(4A, C4)	06/94-10/97	AAN	169	330322	330328	330115, 330309		
	Avant (4A, C4)	06/94-12/97	AAN	169	330322	330328	330115, 330309		
A6 Allroad		**05/06 -**							
2.7 TDI quattro	(4FH, C6)	05/06-	BSG	120	330541	330545	330546		
	(4FH, C6)	05/06-	BPP	132	330541	330545	330546		
3.0 TDI quattro	(4FH, C6)	05/06-	BNG	155	330541	330545, 330725	330546	330748	

OPS Oil Pressure Switches **BLS** Brake Light Switches **TT-RF** Temperature Transmitter and Radiator Fan Switches **RLS** Reverse Light Switches **VAR** Various

ERA S.p.A. Moncalieri (TO) Italy - tel: +39 011 6891511 - fax: +39 011 6472862 - www.eranet.it

Vehicle		Date	Engine	kW	OPS	BLS	TT-RF	RLS	VAR
3.0 TDI quattro	(4FH, C6)	05/06-	ASB	171	330541	330545, 330725	330546	330748	
	(4FH, C6)	10/08-	CDYA	176	330541	330545	330546		
3.0 TFSI quattro	(4FH, C6)	10/08-	CAJA	213		330545			
3.2 FSI quattro	(4FH, C6)	05/06-	AUK	188		330545, 330725	330546	330748	
4.2 FSI quattro	(4FH, C6)	05/06-	BVJ	257	330324	330545	330546		
A8			**03/94 - 07/10**						
2.5 TDI	(4D2, 4D8)	01/97-04/00	AFB, AKN	110	330321	330327, 330328	330141, 330212, 330644, 330687	330249, 330748, 330753	
	(4D2, 4D8)	09/00-09/02	AKE	132	330321	330327, 330328	330141, 330212, 330644, 330687	330249, 330748	
2.5 TDI quattro	(4D2, 4D8)	07/97-04/00	AFB, AKN	110	330321	330327, 330328	330141, 330212, 330496, 330644, 330687	330249, 330748, 330753	
	(4D2, 4D8)	09/00-09/02	AKE	132	330321	330327, 330328	330141, 330212, 330644, 330687	330249, 330748	
2.8	(4D2, 4D8)	07/95-03/96	AEJ	120	330342	330327, 330328	330297, 330497, 330687	330753	
	(4D2, 4D8)	03/94-03/96	AAH	128	330342	330327, 330328	330297, 330497, 330687	330753	
	(4D2, 4D8)	04/96-09/02	ACK, ALG, AMX, APR, AQD	142	330324, 330342	330327, 330328	330141, 330231, 330496, 330497, 330687	330753	
2.8 quattro	(4D2, 4D8)	07/95-03/96	AEJ	120	330342	330328	330297, 330497, 330687	330249, 330753	
	(4D2, 4D8)	03/94-03/96	AAH	128	330342	330328	330297, 330497, 330687	330249, 330753	
	(4D2, 4D8)	04/96-09/02	ACK, AMX, APR, AQD	142	330324, 330342	330327, 330328	330141, 330231, 330496, 330497, 330687	330249, 330753	
2.8 FSI	(4E_)	08/07-07/10	BDX	154	330541	330545	330546		
3.0	(4E_)	07/03-07/10	BBJ	160	330324	330545	330141, 330546		
	(4E_)	08/03-07/10	ASN	162	330324	330545	330141, 330546		
3.0 Long quattro	(4E_)	11/03-05/06	BBJ	160	330324	330545	330141, 330546		
	(4E_)	08/03-05/05	ASN	162	330324	330545	330141, 330546		
3.0 TDI quattro	(4E_)	11/03-07/10	BNG	155	330321, 330541	330545	330546		
	(4E_)	08/03-07/10	ASB	171	330321, 330541	330545	330546		
3.2 FSI	(4E_)	06/05-07/10	BPK	191		330545	330546		
3.2 FSI quattro	(4E_)	06/05-07/10	BPK	191		330545	330546		
3.3 TDI quattro	(4D2, 4D8)	06/00-09/02	AKF	165	330321	330327, 330328	330141, 330212, 330644		
3.7	(4D2, 4D8)	07/95-12/98	AEW	169	330337	330327, 330328	330212		
	(4D2, 4D8)	11/98-09/02	AKC, AQG	191	330324	330327, 330328	330141, 330212, 330496		
3.7 quattro	(4D2, 4D8)	07/95-11/98	AEW, AKJ	169	330337, 330342	330328	330115, 330212	330249	
	(4D2, 4D8)	11/98-09/02	AKC, AQG	191	330324	330327, 330328	330141, 330212, 330496		
	(4E_)	10/02-07/10	BFL	206	330324	330545	330546		
4.0 TDI quattro	(4E_)	03/03-07/10	ASE	202	330321	330545	330546, 330644		

OPS Oil Pressure Switches **BLS** Brake Light Switches **TT-RF** Temperature Transmitter and Radiator Fan Switches **RLS** Reverse Light Switches **VAR** Various

Vehicle		Date	Engine	kW	OPS	BLS	TT-RF	RLS	VAR
4.2 quattro	(4D2, 4D8)	02/99-04/00	ARU	175	330324	330327, 330328	330141, 330212, 330496		
	(4D2, 4D8)	03/94-07/96	AEM	180	330337, 330342	330328	330115, 330212	330249	
	(4D2, 4D8)	07/95-09/98	AGH	210	330337, 330342	330328	330115, 330212	330249	
	(4D2, 4D8)	03/94-11/98	ABZ, AKG	220	330337, 330342	330327, 330328	330115, 330212	330249	
	(4D2, 4D8)	11/98-09/02	AQF, AUW, AUX	228	330324	330327, 330328	330141, 330212, 330496		
	(4E_)	10/02-07/10	BFM	246	330324	330545	330546		
4.2 FSI quattro	(4E_)	06/06-07/10	BVJ	257		330545	330546		
4.2 TDI quattro	(4E_)	07/05-07/10	BMC	235	330321	330545	330546, 330644		
	(4E_)	07/05-07/10	BVN	240	330541	330545	330546		
6.0 W12 quattro	(4D2, 4D8)	01/01-09/02	AZC	309	330324	330327, 330328	330141, 330212, 330644		
	(4E_)	12/03-07/10	BHT, BSB, BTE	331	330324	330545	330546		
S 8 quattro	(4D2, 4D8)	07/96-06/99	AHC, AKH	250	330337, 330342	330328	330115, 330212	330249	
	(4D2, 4D8)	06/99-09/02	AQH, AVP	265	330324	330327, 330328	330141, 330212, 330496	330249	
S8 quattro	(4E_)	06/06-07/10	BSM	331		330545	330546		
ALLROAD			**05/00 - 08/05**						
2.5 TDI quattro	(4BH, C5)	05/03-08/05	BCZ	120	330321	330328, 330545, 330725	330141, 330231, 330644	330249, 330748	
	(4BH, C5)	05/00-08/05	AKE, BAU	132	330321	330328, 330545, 330725	330141, 330231, 330644	330249, 330748	
2.7 T quattro	(4BH, C5)	05/00-08/05	ARE, BES	184	330324	330328, 330545, 330725	330141, 330163, 330231	330249, 330748	
4.2 V8 quattro	(4BH, C5)	07/02-08/05	BAS	220	330324	330328, 330545	330141	330249	
CABRIOLET			**05/91 - 08/00**						
1.8	(8G7, B4)	01/97-08/00	ADR	92	330322, 330326, 330337	330327	330150, 330297		
1.9 TDI	(8G7, B4)	06/95-08/00	1Z, AHU	66	330318, 330321, 330341, 330342	330327	330297		
2.0 16V	(8G7, B4)	06/95-07/96	ACE	103	330337, 330341	330327, 330328	330115, 330127, 330297, 330309	330249	
2.0 E	(8G7, B4)	01/93-07/98	ABK	85	330318, 330326, 330337, 330342	330327	330150, 330286, 330297, 330309		
2.3 E	(8G7, B4)	05/91-07/94	NG	98	330337, 330342	330327	330136, 330297, 330309		
2.6	(8G7, B4)	05/95-08/00	ACZ	102	330322, 330324, 330337, 330342	330327	330127, 330297, 330497		
	(8G7, B4)	06/93-08/00	ABC	110	330322, 330324, 330337, 330342	330327	330127, 330297, 330497		
2.8	(8G7, B4)	11/92-08/00	AAH	128	330322, 330324, 330337, 330342	330327	330127, 330297, 330497		
COUPE			**07/80 - 12/96**						
1.8	(89, 8B)	08/89-07/91	DZ	82	330337, 330342	330327	330297, 330309, 330687		
2.0	(89, 8B)	03/90-07/90	3A	82	330337, 330342	330327	330127, 330297, 330308, 330309, 330687		

OPS Oil Pressure Switches **BLS** Brake Light Switches **TT-RF** Temperature Transmitter and Radiator Fan Switches **RLS** Reverse Light Switches **VAR** Various

ERA S.p.A. Moncalieri (TO) Italy - tel: +39 011 6891511 - fax: +39 011 6472862 - www.eranet.it

Vehicle		Date	Engine	kW	OPS	BLS	TT-RF	RLS	VAR
2.0	(89, 8B)	05/89-03/90	3A	83	330337, 330342	330327	330127, 330297, 330308, 330309, 330687		
	(89, 8B)	05/89-12/96	AAD, ABK	85	330337, 330342	330327	330150, 330286, 330297, 330309, 330687		
2.0 16 V	(89, 8B)	01/92-07/92	6A	101	330337, 330342	330327	330127, 330297, 330687		
	(89, 8B)	08/92-12/96	ACE	103	330337, 330342	330327	330127, 330297, 330687		
2.0 20 V	(89, 8B)	08/89-07/91	NM	118	330337, 330342	330327	330115, 330159		
2.0 20 V quattro	(89, 8B)	08/89-07/91	NM	118	330337, 330342	330327	330115, 330159, 330297		
2.2 quattro	(89, 8B)	11/88-07/91	KV	100	330337	330327	330284, 330297		
2.3	(89, 8B)	03/90-12/96	NG	98	330337, 330342	330327	330136, 330159, 330297		
	(89, 8B)	10/88-07/94	NG	100	330337, 330342	330327	330136, 330159, 330297		
2.3 quattro	(89, 8B)	05/90-12/96	NG	98	330337	330327	330136, 330159, 330297		
	(81, 85)	01/87-10/88	NG	100	330337, 330342	330327	330136, 330159, 330297		
	(89, 8B)	11/88-12/92	NG	100	330337	330327	330136, 330159, 330297		
2.3 20V	(89, 8B)	08/90-07/91	7A	123	330337, 330342	330327	330115, 330159, 330297		
	(89, 8B)	08/89-07/91	7A	125	330337, 330342	330327	330115, 330159, 330297		
2.3 20V quattro	(89, 8B)	05/90-12/96	7A	123	330337, 330342	330327	330115, 330159, 330297		
	(89, 8B)	11/88-07/91	7A	125	330337, 330342	330327	330115, 330159, 330297		
2.6	(89, 8B)	08/92-12/96	ABC	110	330337, 330342	330327	330127, 330297, 330636, 330687		
2.6 quattro	(89, 8B)	08/92-12/96	ABC	110	330337, 330342	330327	330127, 330297, 330687		
2.8	(89, 8B)	09/91-12/96	AAH	128	330337, 330342	330327	330127, 330297, 330636, 330687		
2.8 quattro	(89, 8B)	08/91-12/96	AAH	128	330337, 330342	330327	330127, 330297, 330687		
S2 quattro	(89, 8B)	09/90-09/92	3B	162	330337	330327	330115, 330297, 330309		
	(89, 8B)	10/92-12/96	ABY	169	330337	330327	330115, 330309		
Q7			**03/06 -**						
3.0 TDI	(4L)	03/06-	BUN	155	330541	330545	330546		
	(4L)	03/06-	BUG	171	330541	330545	330546		
	(4L)	11/07-	CASA	176	330541	330545	330546		
3.6 FSI	(4L)	08/06-	BHK	206	330324	330545	330546		
4.2 FSI	(4L)	03/06-	BAR	257	330324	330545	330546		
4.2 TDI	(4L)	03/07-	BTR	240	330321	330545	330546, 330644		

Vehicle		Date	Engine	kW	OPS	BLS	TT-RF	RLS	VAR
R8			**04/07 -**						
4.2 FSI quattro		04/07-	BYH	309		330503, 330545	330546	330748	
TT			**10/98 -**						
1.8 T	(8N3)	09/02-06/06	AUM	110	330324	330710, 330725	330141, 330230	330264, 330544, 330579, 330744	
	Roadster (8N9)	01/01-06/06	AUM	110	330324	330725	330141, 330230, 330280	330264, 330544, 330579, 330744	
	(8N3)	09/05-06/06	BVP	120	330324	330710, 330725	330141, 330230	330264, 330544, 330579	
	Roadster (8N9)	09/05-06/06	BVP	120	330324	330710, 330725	330141, 330230	330264, 330544, 330579	
	(8N3)	10/98-06/06	AJQ, APP, ARY, ATC, AUQ, AWP	132	330324	330706, 330710, 330725	330141, 330161, 330230, 330280, 330496, 330497	330264, 330544, 330579, 330744	
	Roadster (8N9)	10/99-06/06	AJQ, APP, ATC, AUQ, AWP	132	330324	330706, 330710, 330725	330141, 330161, 330230, 330280, 330496, 330497	330264, 330544, 330579, 330744	
	(8N3)	09/05-06/06	BVR	140	330324	330710, 330725	330141, 330230	330264, 330544, 330579	
	Roadster (8N9)	09/05-06/06	BVR	140	330324	330710, 330725	330141, 330230	330264, 330544, 330579	
1.8 T quattro	(8N3)	10/98-06/06	AJQ, ARY, ATC, AWP	132	330324	330706, 330710, 330725	330141, 330161, 330230, 330280, 330496, 330497	330264, 330544, 330579, 330744	
	Roadster (8N9)	02/00-06/06	AJQ, ARY, ATC, AWP	132	330324	330706, 330710, 330725	330141, 330161, 330230, 330280, 330496, 330497	330264, 330544, 330579, 330744	
	(8N3)	09/05-06/06	BVR	140	330324	330710, 330725	330141, 330230	330264, 330544, 330579	
	Roadster (8N9)	09/05-06/06	BVR	140	330324	330710, 330725	330141, 330230	330264, 330544, 330579	
	(8N3)	10/98-06/06	AMU, APX, BAM	165	330324	330706, 330710, 330725	330141, 330161, 330230, 330280, 330497	330264, 330544, 330579, 330744	
	Roadster (8N9)	10/99-06/06	AMU, APX, BAM	165	330324	330706, 330710, 330725	330141, 330161, 330230, 330280, 330497	330264, 330544, 330579, 330744	
	(8N3)	03/05-06/06	BFV	176	330324	330710, 330725	330141, 330230	330264, 330544, 330579	
1.8 TFSI	(8J3)	06/08-	CDAA	118	330325		330546	330264	
	Roadster (8J9)	06/08-	CDAA	118	330325		330546	330264	
2.0 quattro	(8J3)	05/08-	CDLA	195			330546	330579	
	Roadster (8J9)	05/08-	CDLA	195				330579	
2.0 TDI quattro	(8J3)	06/08-	CBBB	125	330325		330546	330579	
	Roadster (8J9)	06/08-	CBBB	125	330325		330546	330579	
2.0 TFSI	(8J3)	10/06-	BWA	147			330546	330579	
	Roadster (8J9)	02/07-	BWA	147			330546	330579	
2.0 TFSI quattro	(8J3)	06/08-	CDLB	200			330546	330579	
	Roadster (8J9)	06/08-	CDLB	200			330546	330579	
2.5 TFSI quattro	(8J3)	05/09-	CEPA	250				330579	
	Roadster (8J9)	05/09-	CEPA	250				330579	

OPS Oil Pressure Switches **BLS** Brake Light Switches **TT-RF** Temperature Transmitter and Radiator Fan Switches **RLS** Reverse Light Switches **VAR** Various

ERA S.p.A. Moncalieri (TO) Italy - tel: +39 011 6891511 - fax: +39 011 6472862 - www.eranet.it

Vehicle		Date	Engine	kW	OPS	BLS	TT-RF	RLS	VAR
3.2 V6 quattro	(8J3)	10/06-	BUB	184	330541		330546	330579	
	Roadster (8J9)	02/07-	BUB	184	330541		330546	330579	
3.2 VR6 quattro	(8N3)	07/03-06/06	BHE	184	330321	330710, 330725	330141, 330230	330264, 330544, 330579	
	Roadster (8N9)	07/03-06/06	BHE	184	330321	330710, 330725	330141, 330230	330264, 330544, 330579	
V8			**10/88 - 02/94**						
3.6 quattro	(44_, 4C_)	04/93-02/94	PT	180	330342			330234, 330249	
	(44_, 4C_)	10/88-02/94	PT	184	330342	330327	330115	330234, 330249	
4.2 quattro	(44_, 4C_)	10/91-02/94	ABH	206	330342	330327	330115	330249	
AUSTIN									
MAESTRO			**03/83 - 09/92**						
1.3	(XC)	03/83-08/85	12 H, 12 H999AA, 12 HC32	46				330448	
1.3 LS	(XC)	03/83-08/90	12 H	49				330448	
1.6	(XC)	03/83-10/84	16 H956AK	59				330448	
1.6 Mayfair HLS	(XC)	03/83-08/90	16 HC37	61				330448	
1.6 MG	(XC)	03/83-08/85	16 HA03AL	72				330448	
	(XC)	03/83-08/90	16 HA35AL	73				330448	
MONTEGO			**04/84 - 10/88**						
1.3	(XE)	10/84-08/88	12 HL	50	330013	330041	330096, 330177	330233	
1.6 LS	Estate (XE)	10/84-08/88	16 HC37	61	330013	330041	330096, 330177	330448	
1.6 LS,HL	(XE)	04/84-08/88	16 HC37	61	330013	330041	330096, 330177	330448	
2.0	(XE)	04/84-08/88	20 H, 20 HSC	74	330013	330041	330096, 330177		
2.0 Turbo	(XE)	04/84-08/88	20 HC85	110	330013	330041	330096		
BMW									
1			**09/04 -**						
116d	(E8, E87)	03/09-	N47 D20 A	85		330724			
116i	(E8, E87)	09/04-	N45 B16 A	85	330356	330724	330643, 330683	330256	
	(E8, E87)	09/07-	N45 B16 TU2	90		330724	330643, 330683		
	(E8, E87)	01/09-	N43 B20 A	90		330724	330643		
118d	(E8, E87)	09/04-	M47N 204 D4	90	330356	330724	330643	330256	
	(E8, E87)	03/07-	N47 D20 C	100		330724			
	Convertible (E88)	09/08-	N47 D20 A	100		330724			
	(E8, E87)	04/07-	N47 D20 A	105		330724			
	Convertible (E88)	09/08-	N47 D20 A	105		330724			
	Coupe (E82)	09/09-	N47 D20 C	105		330724			
118i	(E8, E87)	09/04-	N42 B20 B	95	330356	330724	330643, 330683	330256	
	(E8, E87)	04/07-	N43 B20 A	105		330724	330643		
	Convertible (E88)	03/08-	N43 B20 A	105		330724	330643		

OPS Oil Pressure Switches **BLS** Brake Light Switches **TT-RF** Temperature Transmitter and Radiator Fan Switches **RLS** Reverse Light Switches **VAR** Various

Vehicle		Date	Engine	kW	OPS	BLS	TT-RF	RLS	VAR
120d	(E8, E87)	09/04-	M47N 204 D4	120	330356	330724	330643	330256	
	Convertible (E88)	03/08-	N47 D20 A	120		330724			
	Coupe (E82)	10/07-	N47 D20 A	120		330724			
	(E8, E87)	03/07-	N47 D20 A	130		330724			
	Convertible (E88)	03/08-	N47 D20 A	130		330724			
	Coupe (E82)	10/07-	N47 D20 C	130		330724			
120i	(E8, E87)	09/04-	N42 B20 A	110	330356	330724	330643, 330683	330256	
	(E8, E87)	03/07-	N43 B20 A	115		330724			
	(E8, E87)	03/07-	N43 B20 A	120		330724			
	Convertible (E88)	03/08-	N43 B20 A	120		330724			
	(E8, E87)	04/07-	N43 B20 A	125		330724	330643, 330683		
	Convertible (E88)	03/08-	N43 B20 A	125		330724	330643		
	Coupe (E82)	09/09-	N46 B20 B	125		330724			
123d	(E8, E87)	10/07-	N47 D20 B	150		330724			
	Convertible (E88)	09/08-	N47 D20 B	150		330724			
	Coupe (E82)	10/07-	N47 D20 B	150		330724			
125i	Convertible (E88)	03/08-	N52 B30 A	160		330724	330643		
	Coupe (E82)	10/07-	N53 B30 A	160		330724	330643		
130i	(E8, E87)	03/05-	N52 B30 A	190		330724			
	(E8, E87)	09/05-	N52 B30 A	195	330356	330724	330643, 330683	330256	
135i	Convertible (E88)	03/08-	N54 B30 A	225		330724	330643		
	Coupe (E82)	10/07-	N54 B30 A	225		330724	330643		
3			**06/75 -**						
315	(E21)	03/81-03/84	M10 B16	55	330012	330426	330090	330239	
316	(E0)	09/83-12/90	M10 B18	66	330348	330046, 330426	330090, 330097	330239	
	(E0)	09/82-12/87	M10 B18	66	330348	330046, 330426	330090, 330097	330239	
316 Ci	Coupe (E46)	04/00-	M43 B16 (16 4 E3)	77	330356	330065, 330724	330643, 330683	330256	
	Coupe (E46)	06/02-	N45 B16 A	85	330356	330065, 330724	330643, 330683	330256	
316 g	Compact (E6)	12/95-08/00	--	75	330356	330046, 330065		330256	
316 i	(E0)	09/87-06/91	M40 B16 (Kat.)	73	330348	330046	330097	330239	
	(E6)	09/90-09/93	M40 B16 (Kat.)	73	330356	330046	330116, 330129, 330208	330239, 330256	
	Touring (E0)	09/91-06/94	M40 B16 (Kat.)	73	330356	330046	330097, 330116	330239	
	(E0)	07/88-06/91	M40 B16	75	330356	330046	330097, 330116, 330208	330239	
	(E0)	08/87-08/88	M10 B18	75	330348	330046	330097, 330116	330239	
	(E6)	07/93-02/98	M43 B16	75	330356	330046, 330065, 330433	330116, 330129, 330208	330256	
	(E6)	09/90-09/93	M40 B16, M43 B16	75	330356	330046	330116, 330129, 330208	330239, 330256	
	Compact (E6)	03/94-08/00	M43 B16	75	330356	330046, 330065, 330433	330116, 330129, 330208	330256	
	Coupe (E6)	09/93-04/99	M43 B16	75	330356	330046, 330065, 330433	330116, 330129, 330208	330256	

OPS Oil Pressure Switches **BLS** Brake Light Switches **TT-RF** Temperature Transmitter and Radiator Fan Switches **RLS** Reverse Light Switches **VAR** Various

ERA S.p.A. Moncalieri (TO) Italy - tel: +39 011 6891511 - fax: +39 011 6472862 - www.eranet.it

Vehicle		Date	Engine	kW	OPS	BLS	TT-RF	RLS	VAR
316 i	Touring (E0)	09/91-06/94	M40 B16	75	330356	330046	330097, 330116	330239	
	Touring (E6)	01/96-10/99	M43 B16	75	330356	330046, 330065, 330433	330116, 330129, 330208	330256	
	(E46)	09/98-02/05	M43 164 E3, M43 B19 TU	77	330356	330065, 330724	330643, 330683	330256	
	(E46)	04/00-02/05	M43 B16 (16 4 E3)	77	330356	330065, 330724	330643, 330683	330256	
	(E46)	02/02-02/05	N42 B18	85	330356	330065, 330724	330643, 330683	330256	
	(E46)	06/02-02/05	N45 B16 A	85	330356	330065, 330724	330643, 330683	330256	
	Touring (E46)	03/02-02/05	N42 B18	85	330356	330065, 330724	330643, 330683	330256	
	Touring (E46)	06/02-02/05	N45 B16 A	85	330356	330065, 330724	330643, 330683	330256	
316 ti	Compact (E46)	06/01-02/05	N42 B18	85	330356	330065, 330724	330643, 330683	330256	
	Compact (E46)	06/02-02/05	N45 B16 A	85		330724	330643, 330683		
316d	(E90)	07/09-	N47 D20 C	85		330724			
316i	(E90)	02/06-	N45 B16 A	85	330356	330724	330643, 330683	330256	
	(E90)	09/07-	N43 B16 A	90		330724	330643		
	Touring (E91)	09/07-	N43 B16 A	90		330724	330643		
318 Ci	Coupe (E46)	11/99-09/01	M43 B19	87	330356	330065, 330724	330643, 330683	330256	
	Convertible (E46)	09/01-	N42 B20	105	330356	330065, 330724	330643, 330683	330256	
	Coupe (E46)	09/01-	N42 B20, N46 B20	105	330356	330065, 330724	330643, 330683	330256	
	Convertible (E46)	02/05-	N46 B20 B	110	330356	330065, 330724	330643, 330683	330256	
	Coupe (E46)	03/05-	N46 B20 A	110	330356	330065, 330724	330643, 330683	330256	
318 d	(E46)	09/01-03/03	M47 204 D1	85	330356	330065, 330724	330643	330256	
	(E46)	03/03-02/05	M47N 204 D4	85	330356	330065, 330724	330643	330256	
	Touring (E46)	03/02-02/05	M47 204 D1	85	330356	330065, 330724	330643	330256	
	Touring (E46)	03/03-02/05	M47N 204 D4	85	330356	330065, 330724	330643	330256	
318 i	(E0)	12/84-08/88	M10 B18, M10 B18 (L-Jetronic, Kat.)	75	330348, 330356	330046, 330426	330090, 330097, 330116, 330691	330239	
	(E0)	09/82-08/87	M10 B18	77	330348, 330356	330046, 330426	330090, 330097, 330116, 330691	330239	
	(E0)	09/87-06/91	M40 B18	83	330356	330046	330097, 330116, 330208	330239	
	(E6)	12/90-10/93	M40 B18	83	330356	330046, 330065, 330433	330116, 330129, 330208	330239, 330256	
	Convertible (E0)	09/90-10/93	M40 B18	83	330356	330046	330097, 330116, 330208	330239	
	Touring (E0)	04/89-06/94	M40 B18	83	330356	330046	330097, 330116, 330208	330239	
	(E0)	09/87-06/91	M40 B18	85	330356	330046	330097, 330116, 330208	330239	
	(E6)	10/93-02/98	M43 B18	85	330356	330046, 330065, 330433	330116, 330129, 330208	330256	
	Convertible (E6)	01/94-04/99	M43 B18	85	330356	330046, 330065, 330433	330116, 330129, 330208	330256	
	Touring (E0)	09/87-06/91	M40 B18	85	330356	330046	330097, 330116, 330208	330239	
	Touring (E6)	07/95-10/99	M43 B18	85	330356	330046, 330065, 330433	330116, 330129, 330208	330256	
	(E46)	02/98-09/01	M43 B19	87	330356	330065, 330724	330643, 330683	330256	

OPS Oil Pressure Switches **BLS** Brake Light Switches **TT-RF** Temperature Transmitter and Radiator Fan Switches **RLS** Reverse Light Switches **VAR** Various

Vehicle		Date	Engine	kW	OPS	BLS	TT-RF	RLS	VAR
318 i	Touring (E46)	10/99-09/01	M43 B19	87	330356	330065, 330724	330643, 330683	330256	
	(E46)	09/01-02/05	N42 B20, N46 B20	105	330356	330065, 330724	330643, 330683	330256	
	Touring (E46)	09/01-02/05	N42 B20	105	330356	330065, 330724	330643, 330683	330256	
318 is	(E0)	09/89-08/91	M42 B18	100	330356	330046	330097, 330116, 330208	330239	
	(E6)	03/93-02/98	M42 B18	103	330356	330046, 330065	330116, 330129, 330208	330239, 330256	
	(E6)	09/95-02/98	M44 B19	103	330356	330046, 330065	330208	330256	
	Coupe (E6)	03/92-10/95	M42 B18	103	330356	330046, 330065	330116, 330129, 330208	330239, 330256	
	Coupe (E6)	09/95-04/99	M44 B19	103	330356	330046, 330065	330208	330256	
318 td	Compact (E46)	03/03-02/05	M47N 204 D4	85	330356	330065, 330724	330643	330256	
318 tds	(E6)	01/95-02/98	M41 D18 (Inter.)	66	330356	330046, 330065, 330433		330256	
	Compact (E6)	01/95-08/00	M41 D18 (Inter.)	66	330356	330046, 330065, 330433		330256	
	Touring (E6)	01/95-10/99	M41 D18 (Inter.)	66	330356	330046, 330065, 330433		330256	
318 ti	Compact (E6)	11/94-08/95	M42 B18	103	330356	330046, 330065, 330433	330116, 330129	330256	
	Compact (E6)	07/95-08/00	M44 B19	103	330356	330046, 330065		330256	
	Compact (E46)	09/01-02/05	N42 B20	105	330356	330065, 330724	330643, 330683	330256	
318d	(E90)	09/05-	M47N 204 D4	90	330356	330724	330643	330256	
	Touring (E91)	09/05-	M47N 204 D4	90	330356	330724	330643	330256	
	(E90)	09/05-	N47 D20 A	105		330724			
	Touring (E91)	09/07-	N47 D20 A	105		330724			
318i	(E90)	09/05-03/07	N46 B20 B	95	330356	330724	330643, 330683	330256	
	Touring (E91)	01/06-	N46 B20 B	95	330356	330724	330643, 330683	330256	
	(E90)	09/07-	N43 B20 A	105		330724	330643, 330683		
	Touring (E91)	09/07-	N43 B20 A	105		330724	330643, 330683		
320 Cd	Convertible (E46)	02/05-	M47N 204 D4	110	330356	330065, 330724	330643	330256	
	Coupe (E46)	11/03-	M47N 204 D4	110	330356	330065, 330724	330643	330256	
320 Ci	Coupe (E46)	08/99-09/00	M52 B(20 6 S4)	110	330356	330065, 330724	330643, 330683	330256	
	Convertible (E46)	09/00-	M54 226 S1, M54 B22	125	330356	330065, 330724	330643, 330683	330256	
	Coupe (E46)	09/00-	M54 226 S1	125	330356	330065, 330724	330643, 330683	330256	
320 d	(E46)	04/98-09/01	M47 204 D1, M47 D20	100	330356	330065, 330724	330643	330256	
	Touring (E46)	03/00-09/01	M47 204 D1, M47 D20	100	330356	330065, 330724	330643	330256	
	(E46)	09/01-02/05	M47N 204 D4	110	330356	330065, 330724	330643	330256	
	Touring (E46)	09/01-02/05	M47N 204 D4	110	330356	330065, 330724	330643	330256	
320 i	(E0)	09/82-12/85	M20 B20	92	330012, 330356	330046, 330426	330097, 330116, 330208	330239	
	(E0)	12/85-06/91	M20 B20, M20 B20 (L-Jetronic)	95	330012, 330356	330046, 330426	330097, 330116, 330208	330239	
	Convertible (E0)	04/86-10/93	M20 B20	95	330012, 330356	330046, 330426	330097, 330116, 330208	330239	

OPS Oil Pressure Switches **BLS** Brake Light Switches **TT-RF** Temperature Transmitter and Radiator Fan Switches **RLS** Reverse Light Switches **VAR** Various

ERA S.p.A. Moncalieri (TO) Italy - tel: +39 011 6891511 - fax: +39 011 6472862 - www.eranet.it

Vehicle		Date	Engine	kW	OPS	BLS	TT-RF	RLS	VAR
320 i	Touring (E0)	01/88-12/91	M20 B20	95	330012, 330356	330046, 330426	330097, 330116, 330208	330239	
	(E46)	03/98-09/00	M52 B(20 6 S3) Vanos	110	330356	330065, 330724	330643, 330683	330256	
	(E6)	09/90-02/98	M50 B(20 6 S1), M50 B(20 6 S2) Vanos, M50 B20, M52 B(20 6 S3) Vanos	110	330356	330046, 330065, 330433	330116, 330129, 330208	330239, 330256	
	Convertible (E6)	12/93-04/99	M50 B(20 6 S2) Vanos, M52 B(20 6 S3) Vanos	110	330356	330046, 330065, 330433	330129, 330208	330256	
	Coupe (E6)	03/92-04/99	M50 B(20 6 S1), M50 B(20 6 S2) Vanos, M50 B20 TU, M52 B(20 6 S3) Vanos	110	330356	330046, 330065, 330433	330116, 330129, 330208	330239, 330256	
	Touring (E46)	10/99-09/00	M52 B(20 6 S3) Vanos, M52 B20	110	330356	330065, 330724	330643, 330683	330256	
	Touring (E6)	01/95-10/99	M52 B(20 6 S3) Vanos	110	330356	330046, 330065, 330433	330208	330256	
	(E46)	09/00-02/05	M54 226 S1	125	330356	330065, 330724	330643, 330683	330256	
	Touring (E46)	09/00-02/05	M54 226 S1	125	330356	330065, 330724	330643, 330683	330256	
320 is	(E0)	05/88-12/90	S14 204 EA	141	330356	330046	330097, 330116, 330208	330239	
320 si	(E90)	05/06-	N45 B20 A	127	330356	330724	330643, 330683	330256	
320 td	Compact (E46)	09/01-02/05	M47N 204 D4	110	330356	330065, 330724	330643	330256	
320/6	(E21)	09/77-08/82	M20 B20	90			330090		
320d	(E90)	09/05-	M47N 204 D4	110	330356	330724	330643	330256	
	Touring (E91)	09/05-	M47N 204 D4	110	330356	330724	330643	330256	
	(E90)	01/05-	M47N 204 D4	120	330356	330724	330643	330256	
	Touring (E91)	09/05-	M47N 204 D5	120	330356	330724	330643	330256	
	(E90)	09/07-	N47 D20 A	130		330724			
	Convertible (E9)	03/07-	N47 D20 A	130		330724			
	Coupe (E92)	03/07-	N47 D20 A	130		330724			
	Touring (E91)	09/07-	N47 D20 A	130		330724			
	(E90)	01/10-	N47 D20 C	135		330724			
	Convertible (E9)	01/10-	N47 D20 C	135		330724			
	Coupe (E92)	01/10-	N47 D20 C	135		330724			
	Touring (E91)	01/10-	N47 D20 C	135		330724			
320d xDrive	(E90)	09/08-	N47 D20 C	130		330724			
	Coupe (E92)	09/08-	N47 D20 C	130		330724			
	Touring (E91)	09/08-	N47 D20 C	130		330724			
	(E90)	01/10-	N47 D20 C	135		330724			
	Coupe (E92)	01/10-	N47 D20 C	135		330724			
	Touring (E91)	01/10-	N47 D20 C	135		330724			
320i	(E90)	01/05-03/07	N46 B20 A, N46 B20 C	110	330356	330724	330643, 330683	330256	
	Convertible (E9)	03/07-08/07	N46N B20 B	110		330724	330643, 330683		
	Coupe (E92)	11/06-06/07	N46N B20 B	110		330724	330643, 330683		

OPS Oil Pressure Switches **BLS** Brake Light Switches **TT-RF** Temperature Transmitter and Radiator Fan Switches **RLS** Reverse Light Switches **VAR** Various

Vehicle		Date	Engine	kW	OPS	BLS	TT-RF	RLS	VAR
320i	Touring (E91)	09/05-	N46 B20 A, N46 B20 C	110	330356	330724	330643, 330683	330256	
	(E90)	03/07-	N43 B20 A	115		330724			
	(E90)	09/07-	N43 B20 A	125		330724	330643		
	Convertible (E9)	03/07-	N43 B20 A	125		330724	330643		
	Coupe (E92)	03/07-	N43 B20 A	125		330724	330643		
	Touring (E91)	09/07-	N43 B20 A	125		330724	330643		
320xd	(E90)	09/07-	N47 D20 C	130		330724			
	Coupe (E92)	03/07-	N47 D20 A	130		330724			
	Touring (E91)	09/07-	N47 D20 A	130		330724			
323 Ci	Convertible (E46)	04/00-09/00	M52 B25 (Vanos)	125	330356	330065, 330724	330643, 330683	330256	
	Coupe (E46)	04/99-09/00	M52 B25 (Vanos)	125	330356	330065, 330724	330643, 330683	330256	
323 i	(E0)	09/82-08/83	M20 B23	102	330012	330426	330090, 330691	330239	
	(E21)	01/78-08/82	M20 B23	105			330090		
	(E0)	09/83-08/86	M20 B23	110	330012	330426	330090, 330097, 330116, 330691	330239	
	(E46)	03/98-09/00	M52 B25 (Vanos)	125	330356	330065, 330724	330643, 330683	330256	
323 i 2.5	(E6)	03/95-02/98	M52 B25 (Vanos)	125	330356	330046, 330065, 330433	330208	330256	
	Convertible (E6)	06/95-04/99	M52 B25 (Vanos)	125	330356	330046, 330065, 330433	330208	330256	
	Coupe (E6)	03/95-04/99	M52 B25 (Vanos)	125	330356	330046, 330065, 330433	330208	330256	
	Touring (E6)	09/95-10/99	M52 B25 (Vanos)	125	330356	330046, 330065, 330433	330208	330256	
323 ti	Compact (E6)	08/97-08/00	M52 B25 (Vanos)	125	330356	330046, 330065		330256	
323i	(E90)	04/06-06/07	N52 B25 A	130		330724	330643, 330683		
	Convertible (E9)	03/07-	N52N B25 A	130		330724	330643		
	Coupe (E92)	06/06-	N52N B25 A	130	330356	330724	330643	330256	
	Touring (E91)	04/06-06/07	N52N B25 A	130	330356	330724	330643	330256	
324 d	(E0)	09/85-08/91	M21 D24 W	63	330349, 330356	330046, 330433	330115, 330121, 330208	330239	
324 td	(E0)	09/87-08/91	M21 D24, M21 D24 WA	85	330356	330046, 330433	330115, 330121, 330208	330239	
	Touring (E0)	01/88-06/93	M21 D24, M21 D24 WA	85	330356	330046, 330433	330115, 330121, 330208	330239	
325 Ci	Convertible (E46)	09/00-	M54 256 S5	141	330356	330065, 330724	330643, 330683	330256	
	Coupe (E46)	09/00-	M54 256 S5	141	330356	330065, 330724	330643, 330683	330256	
325 e 2.7	(E0)	01/85-08/87	M20 B27	95	330012, 330356	330046, 330426	330090, 330097, 330116, 330208, 330691	330239	
325 i	(E0)	12/86-06/91	M20 B25	125	330012, 330356	330046, 330426	330097, 330116, 330208	330239	
	Convertible (E0)	09/87-10/93	M20 B25	125	330012, 330356	330046, 330426	330097, 330116, 330208	330239	
	Touring (E0)	07/87-03/93	M20 B25	125	330012, 330356	330046, 330426	330097, 330116, 330208	330239	
	(E0)	09/83-11/89	M20 B25	126	330012, 330356	330046, 330426	330097, 330116, 330208	330239	

OPS Oil Pressure Switches **BLS** Brake Light Switches **TT-RF** Temperature Transmitter and Radiator Fan Switches **RLS** Reverse Light Switches **VAR** Various

ERA S.p.A. Moncalieri (TO) Italy - tel: +39 011 6891511 - fax: +39 011 6472862 - www.eranet.it

Vehicle		Date	Engine	kW	OPS	BLS	TT-RF	RLS	VAR
325 i	Convertible (E0)	12/85-12/87	M20 B25	126	330012, 330356	330046, 330426	330097, 330116, 330208	330239	
	(E46)	09/00-02/05	M54 256 S5	141	330356	330065, 330724	330643, 330683	330256	
	(E6)	09/90-09/95	M50 B25, M50 B25 (Vanos)	141	330356	330065, 330433	330116, 330129, 330208	330239, 330256	
	Convertible (E6)	03/93-03/95	M50 B25	141	330356	330065, 330433	330116, 330129, 330208	330239, 330256	
	Coupe (E6)	03/92-04/99	M50 B25 (Vanos)	141	330356	330065, 330433	330116, 330129, 330208	330239, 330256	
	Touring (E46)	09/00-02/05	M54 256 S5	141	330356	330065, 330724	330643, 330683	330256	
325 i X	(E0)	12/86-08/91	M20 B25	125	330012, 330356	330046, 330065, 330426	330097, 330116, 330208	330239	
	Touring (E0)	06/88-10/93	M20 B25	125	330012, 330356	330046, 330065, 330426	330097, 330116, 330208	330239	
	(E0)	03/86-12/87	M20 B25	126	330012, 330356	330046, 330065, 330426	330097, 330116, 330208	330239	
325 td	(E6)	09/91-02/98	M51 D25	85	330356	330065, 330433	330121, 330129	330256	
325 tds	(E6)	05/93-02/98	M51 D25 (Inter.)	105	330356	330046, 330065, 330433	330121, 330129	330256	
	Touring (E6)	01/95-10/99	M51 D25 (Inter.)	105	330356	330046, 330065, 330433	330121, 330129	330256	
325 ti	Compact (E46)	06/01-02/05	M54 256 S5	141	330356	330065, 330724	330643, 330683	330256	
325 xi	(E46)	09/00-02/05	M54 256 S5	141	330356	330065, 330724	330643, 330683	330256	
	Touring (E46)	09/00-02/05	M54 256 S5	141	330356	330065, 330724	330643, 330683	330256	
325d	(E90)	09/06-	M57 306 D3	145	330356	330724	330643	330256	
	Convertible (E9)	03/07-	N57 306 D3	145		330724	330643		
	Coupe (E92)	03/07-	N57N 306 D3	145		330724	330643		
	Touring (E91)	09/06-	M57 306 D3	145	330356	330724	330643	330256	
	(E90)	01/10-	N57 D30 A	150		330724			
	Coupe (E92)	04/10-	N57 D30 A	150		330724			
	Touring (E91)	04/10-	N57 D30 A	150		330724			
325i	(E90)	01/05-	N52 B25 A	160	330356	330724	330643, 330683	330256	
	(E90)	09/07-	N53 B30 A	160		330724	330643		
	Convertible (E9)	03/07-	N53 B30 A	160		330724	330643		
	Convertible (E9)	03/07-	N52 B25 A	160		330724	330643, 330683		
	Coupe (E92)	09/06-	N52 B25 C	160	330356	330724	330643, 330683	330256	
	Coupe (E92)	09/07-	N53 B30 A	160		330724	330643		
	Touring (E91)	09/05-	N52 B25 C	160	330356	330724	330643, 330683	330256	
	Touring (E91)	09/07-	N53 B30 A	160		330724	330643		
325i xDrive	(E90)	09/08-	N53 B30 A	160		330724			
	Coupe (E92)	09/08-	N53 B30 A	160		330724			
325i xDrive	Touring (E91)	09/08-	N53 B30 A	160		330724			
325xi	(E90)	01/05-	N52 B25 A	160	330356	330724	330643, 330683	330256	
	(E90)	09/07-	N53 B30 A	160		330724	330643		
	Coupe (E92)	09/06-	N52 B25 C	160	330356	330724	330643, 330683	330256	
	Coupe (E92)	09/07-	N53 B30 A	160		330724	330643		

OPS Oil Pressure Switches **BLS** Brake Light Switches **TT-RF** Temperature Transmitter and Radiator Fan Switches **RLS** Reverse Light Switches **VAR** Various

Vehicle		Date	Engine	kW	OPS	BLS	TT-RF	RLS	VAR
325xi	Touring (E91)	09/05-	N52 B25 C	160	330356	330724	330643, 330683	330256	
	Touring (E91)	09/07-	N53 B30 A	160		330724	330643		
328 Ci	Coupe (E46)	04/99-06/00	M52 B28	142	330356	330065, 330724	330643, 330683	330256	
328 i	(E46)	02/98-06/00	M52 B28	142	330356	330065, 330724	330643, 330683	330256	
	(E6)	01/95-02/98	M52 B28	142	330356	330046, 330065, 330433	330208	330256	
	Convertible (E6)	03/95-04/99	M52 B28	142	330356	330046, 330065, 330433	330208	330256	
	Coupe (E6)	01/95-04/99	M52 B28	142	330356	330046, 330065, 330433	330208	330256	
	Touring (E46)	10/99-06/00	M52 B28	142	330356	330065, 330724	330643, 330683	330256	
	Touring (E6)	01/95-10/99	M52 B28	142	330356	330046, 330065, 330433	330208	330256	
328i	(E90)	07/05-11/07	N52N B30 A	187		330724	330643		
330 Cd	Convertible (E46)	08/05-	M57N 306 D2	150	330356	330065, 330724	330643	330256	
	Coupe (E46)	03/03-	M57N 306 D2	150	330356	330065, 330724	330643	330256	
330 Ci	Convertible (E46)	06/00-	M54 306 S3	170	330356	330065, 330724	330643, 330683	330256	
	Coupe (E46)	06/00-	M54 306 S3	170		330724	330643, 330683		
330 d	(E46)	10/99-02/05	M57 D30	135	330356	330065, 330724	330643	330256	
	Touring (E46)	10/99-02/05	M57 D30	135	330356	330065, 330724	330643	330256	
	(E46)	03/03-02/05	M57N 306 D2	150	330356	330065, 330724	330643	330256	
	Touring (E46)	03/03-02/05	M57N 306 D2	150	330356	330065, 330724	330643	330256	
330 i	(E46)	06/00-02/05	M54 306 S3	170	330356	330065, 330724	330643, 330683	330256	
	Touring (E46)	06/00-02/05	M54 306 S3	170	330356	330065, 330724	330643, 330683	330256	
330 xd	(E46)	06/00-02/05	M57 D30	135	330356	330065, 330724	330643	330256	
	Touring (E46)	06/00-02/05	M57 D30	135	330356	330065, 330724	330643	330256	
	(E46)	03/03-02/05	M57N 306 D2	150	330356	330065, 330724	330643	330256	
	Touring (E46)	03/03-02/05	M57N 306 D2	150	330356	330065, 330724	330643	330256	
330 xi	(E46)	06/00-02/05	M54 306 S3	170	330356	330065, 330724	330643, 330683	330256	
	Coupe (E46)	06/00-	M54 306 S3	170	330356	330065, 330724	330643, 330683	330256	
	Touring (E46)	06/00-02/05	M54 306 S3	170	330356	330065, 330724	330643, 330683	330256	
330d	(E90)	09/05-	M57 306 D3	170	330356	330724	330643	330256	
	Convertible (E9)	03/07-	N57N 306 D3	170		330724	330643		
	Coupe (E92)	09/06-	M57 306 D3	170	330356	330724	330643	330256	
	Touring (E91)	09/05-	M57 306 D3	170	330356	330724	330643	330256	
	(E90)	01/09-	N57 D30 A	180		330724			
	Convertible (E9)	01/09-	N57 D30 A	180		330724			
	Coupe (E92)	01/09-	N57 D30 A	180		330724			
330d	Touring (E91)	01/09-	N57 D30 A	180		330724			
330d xDrive	(E90)	01/09-	N57 D30 A	180		330724			
	Coupe (E92)	01/09-	N57 D30 A	180		330724			
330i	(E90)	01/05-	N52 B30 A	190	330356	330724	330643, 330683	330256	
	Coupe (E92)	09/06-	N52 B30 A	190	330356	330724	330643, 330683	330256	

OPS Oil Pressure Switches **BLS** Brake Light Switches **TT-RF** Temperature Transmitter and Radiator Fan Switches **RLS** Reverse Light Switches **VAR** Various

ERA S.p.A. Moncalieri (TO) Italy - tel: +39 011 6891511 - fax: +39 011 6472862 - www.eranet.it

Vehicle		Date	Engine	kW	OPS	BLS	TT-RF	RLS	VAR
330i	Touring (E91)	09/05-	N52 B30 A	190	330356	330724	330643, 330683	330256	
	(E90)	09/07-	N52 B30 A	200		330724	330643		
	Convertible (E9)	03/07-	N52 B30 A	200		330724	330643		
	Coupe (E92)	09/06-	N52 B30 A	200	330356	330724	330643	330256	
	Touring (E91)	09/07-	N52 B30 A	200		330724	330643		
330i xDrive	(E90)	09/08-	N53 B30 A	200		330724			
	Coupe (E92)	09/08-	N53 B30 A	200		330724			
	Touring (E91)	09/08-	N53 B30 A	200		330724			
330xd	(E90)	09/05-	M57 306 D3	170	330356	330724	330643	330256	
	Coupe (E92)	09/06-	M57 306 D3	170	330356	330724	330643	330256	
	Touring (E91)	09/05-	M57 306 D3	170	330356	330724	330643	330256	
	Coupe (E92)	01/09-	N57 D30 A	180		330724			
	Touring (E91)	01/09-	N57 D30 A	180		330724			
330xi	(E90)	01/05-	N52 B30 A	190	330356	330724	330643, 330683	330256	
	Coupe (E92)	09/06-	N52 B30 A	190	330356	330724	330643	330256	
	Touring (E91)	09/05-	N52 B30 A	190	330356	330724	330643, 330683	330256	
	(E90)	09/07-	N53 B30 A	200		330724	330643		
	Coupe (E92)	09/06-	N52 B30 A	200	330356	330724	330643	330256	
	Touring (E91)	09/07-	N53 B30 A	200		330724	330643		
335d	(E90)	09/06-	M57N 306 D5	210	330356	330724	330643		
	Coupe (E92)	09/06-	M57N 306 D5	210	330356	330724	330643		
	Touring (E91)	09/06-	M57N 306 D5	210	330356	330724	330643		
335i	(E90)	09/06-	N54 B30 A	225	330356	330724	330643	330256	
	Convertible (E9)	03/07-	N54 B30 B	225		330724	330643		
	Coupe (E92)	09/06-	N54 B30 A	225	330356	330724	330643	330256	
	Touring (E91)	09/06-	N54 B30 A	225	330356	330724	330643	330256	
335i xDrive	(E90)	09/08-	N54 B30 A	225		330724			
	Coupe (E92)	09/08-	N54 B30 A	225		330724			
	Touring (E91)	09/08-	N54 B30 A	225		330724			
335xi	(E90)	09/07-	N54 B30 A	225		330724	330643		
	Coupe (E92)	09/06-	N54 B30 A	225		330724	330643		
	Touring (E91)	09/07-	N54 B30 A	225		330724	330643		
M3	(E90)	03/07-	S65 B40	309		330724	330643		
	Convertible (E9)	03/07-	S65 B40	309		330724	330643		
	Coupe (E92)	03/07-	S65 B40	309		330724	330643		
M3 2.3	(E0)	07/86-06/91	S14 B23	143	330356	330046, 330426	330097, 330116, 330208	330239	
M3 2.3	Convertible (E0)	06/88-06/91	S14 B23	143	330356	330046, 330426	330097, 330116, 330208	330239	
	(E0)	02/87-05/89	S14 B23	147	330356	330046, 330426	330097, 330116, 330208	330239	
	(E0)	06/89-06/91	S14 B23	158	330356	330046, 330426	330097, 330116, 330208	330239	

OPS Oil Pressure Switches **BLS** Brake Light Switches **TT-RF** Temperature Transmitter and Radiator Fan Switches **RLS** Reverse Light Switches **VAR** Various

Vehicle		Date	Engine	kW	OPS	BLS	TT-RF	RLS	VAR
M3 3.0	(E6)	08/94-09/95	S50 B30	210	330356	330065, 330433	330116, 330129, 330208	330256	
	Convertible (E6)	01/94-10/95	S50 B30	210	330356	330065, 330433	330116, 330129, 330208	330256	
	Coupe (E6)	10/92-01/95	S50 B30	210	330356	330065, 330433	330116, 330129, 330208	330256	
	Coupe (E6)	01/95-10/95	S50 B30	217	330356	330065, 330433	330116, 330129, 330208	330256	
M3 3.2	(E6)	09/95-02/98	S50 B32	236	330356	330065, 330433		330256	
	Convertible (E6)	10/95-04/99	S50 B32	236	330356	330065, 330433		330256	
	Coupe (E6)	10/95-04/99	S50 B32	236	330356	330065, 330433		330256	
	Convertible (E46)	04/01-	S54 326 S4	252	330356	330724	330643, 330683	330256	
	Coupe (E46)	06/00-	S54 326 S4	252	330356	330724	330643, 330683	330256	
M3 CSL	Coupe (E46)	06/03-	S54N 326 S4	265	330356	330724	330643, 330683	330256	
M3 EVO I 2.3	(E0)	10/88-10/90	S14 B23 (EVO I)	162	330356	330046, 330426	330097, 330116, 330208	330239	
5			**08/72 -**						
518	(E12)	07/74-05/81	M10 B18, M10 B18 (2B4)	66	330348	330426	330090	330239	
	(E28)	06/81-08/84	M10 B18	66	330348	330426	330090, 330116	330239	
518 g	Touring (E34)	11/95-06/96	M43 B18	85	330356	330046, 330065	330097, 330116, 330208	330256	
518 i	(E28)	09/83-12/87	M10 B18	77	330012, 330348	330046, 330426	330090, 330691	330239	
	(E34)	08/89-09/95	M40 B18	83	330356	330046, 330433	330097, 330116, 330208	330239, 330256	
	Touring (E34)	03/93-09/94	M40 B18	83	330356	330046, 330433	330097, 330116, 330208	330239, 330256	
	(E34)	08/89-09/95	M43 B18	85	330356	330046, 330065	330116, 330129, 330208	330256	
	Touring (E34)	09/94-01/97	M43 B18	85	330356	330046, 330065	330097, 330116, 330129, 330208	330256	
518i	(E12)	08/79-08/81	M10 B18 (K-Jetronic)	75	330348	330426	330090	330239	
	(E28)	09/81-08/84	M10 B18 (K-Jetronic)	75	330012, 330348	330046, 330426	330090, 330691	330239	
520 d	(E39)	02/00-06/03	M47 204 D1, M47 D20	100	330356	330065, 330724	330643	330256	
	Touring (E39)	02/00-09/03	M47 204 D1, M47 D20	100	330356	330065, 330724	330643	330256	
520 i	(E28)	06/81-12/87	M20 B20, M20 B20 (L-Jetronic)	92	330012, 330356	330046, 330426	330090, 330097, 330116, 330691	330239	
	(E28)	08/85-12/87	M20 B20	95	330012, 330356	330046, 330426	330090, 330097, 330116, 330691	330239	
	(E34)	01/88-08/91	M20 B20	95	330356	330046, 330426, 330433	330097, 330116, 330208	330239	
	(E39)	01/96-09/00	M52 B(20 6 S3) Vanos, M52 B(20 6 S4)	110	330356	330065, 330724	330643, 330683	330256	
	Touring (E34)	11/91-01/97	M50 B(20 6 S1), M50 B(20 6 S2) Vanos	110	330356	330046, 330065, 330433	330097, 330116, 330208	330256	
	Touring (E39)	01/97-09/00	M52 B(20 6 S3) Vanos, M52 B(20 6 S4)	110	330356	330065, 330724	330643, 330683	330256	
	(E39)	09/00-06/03	M54 B22	125	330356	330724	330643, 330683	330256	

OPS Oil Pressure Switches **BLS** Brake Light Switches **TT-RF** Temperature Transmitter and Radiator Fan Switches **RLS** Reverse Light Switches **VAR** Various

ERA S.p.A. Moncalieri (TO) Italy - tel: +39 011 6891511 - fax: +39 011 6472862 - www.eranet.it

Vehicle		Date	Engine	kW	OPS	BLS	TT-RF	RLS	VAR
520 i	Touring (E39)	09/00-05/04	M54 B22	125	330356	330724	330643, 330683	330256	
520 i 24V	(E34)	09/89-09/95	M50 B(20 6 S1), M50 B(20 6 S2) Vanos	110	330356	330046, 330065, 330433	330097, 330116, 330208	330256	
520/6	(E12)	09/77-05/81	M20 B20	90			330090		
520d	(E60)	09/05-	M47N 204 D4	110	330356	330724	330643	330256	
	Touring (E61)	09/05-	M47N 204 D4	110	330356	330724	330643	330256	
	(E60)	07/05-	M47N 204 D5	120	330356	330724	330643	330256	
	Touring (E61)	07/05-	M47N 204 D5	120	330356	330724	330643	330256	
	(E60)	09/07-	N47 D20 A	130		330724	330643		
	Touring (E61)	09/07-	N47 D20 A	130		330724			
520i	(E60)	07/03-	M54 226 S1	125	330356	330724	330643, 330683	330256	
	(E60)	09/07-	N43 B20 A	125		330724	330643		
	Touring (E61)	06/04-	M54 226 S1	125	330356	330724	330643, 330683	330256	
	Touring (E61)	09/07-	N43 B20 A	125		330724	330643		
523 i	(E39)	11/95-09/00	M52 B25 (Vanos)	125	330356	330065, 330724	330643, 330683	330256	
	Touring (E39)	01/97-09/00	M52 B25 (Vanos)	125	330356	330065, 330724	330643, 330683	330256	
523i	(E60)	07/05-	N52 B25 A	130	330356	330724	330643, 330683	330256	
	Touring (E61)	07/05-	N52 B25 A	130	330356	330724	330643, 330683	330256	
	(E60)	01/07-	N52 B25 A	140		330724	330643		
	Touring (E61)	01/07-	N52 B25 A	140		330724	330643		
524 d	(E28)	03/86-12/87	M21 D24 W	63	330349	330046, 330426		330239	
524 td	(E28)	09/83-12/87	M21 D24 WA	85	330349	330046, 330426	330115	330239	
	(E34)	03/88-09/95	M21 D24, M21 D24 WA	85	330356	330065, 330426, 330433	330115, 330121, 330208	330239, 330256	
525 d	(E39)	02/00-06/03	M57 256 D1	120	330356	330724		330256	
	Touring (E39)	02/00-05/04	M57 256 D1	120	330356	330724		330256	
525 e 2.7	(E28)	09/81-12/87	M20 B27	90	330012, 330356	330046, 330426	330090, 330097, 330116, 330691	330239	
	(E28)	05/83-12/87	M20 B27	92	330012	330046, 330426	330090, 330097, 330116, 330691	330239	
	(E28)	12/84-12/87	M20 B27	95	330012	330046, 330426	330090, 330097, 330116, 330691	330239	
525 i	(E28)	06/81-12/87	M30 B25 (L-Jet.)	110	330012	330046, 330416, 330419, 330426	330090, 330097, 330691	330239	
	(E34)	01/88-08/91	M20 B25	125	330356	330433	330116, 330129, 330208	330239	
	(E39)	09/00-06/03	M54 256 S5	141	330356	330724	330643, 330683	330256	
	Touring (E34)	11/91-01/97	M50 B25	141	330356	330433	330116, 330129, 330208	330239, 330256	
	Touring (E39)	09/00-05/04	M54 256 S5	141	330356	330724	330643, 330683	330256	
525 i 24V	(E34)	09/89-09/95	M50 B25, M52 B25 (Vanos)	141	330356	330433	330116, 330129, 330208	330239, 330256	
525 i X	Touring (E34)	02/92-01/97	M50 B25, M52 B25 (Vanos)	141	330356	330433	330116, 330129, 330208	330256	
525 i X 24V	(E34)	10/91-09/95	M52 B25 (Vanos)	141	330356	330433	330116, 330129, 330208	330256	

OPS Oil Pressure Switches **BLS** Brake Light Switches **TT-RF** Temperature Transmitter and Radiator Fan Switches **RLS** Reverse Light Switches **VAR** Various

Vehicle		Date	Engine	kW	OPS	BLS	TT-RF	RLS	VAR
525 td	(E34)	04/93-09/95	M51 D25	85	330356	330046, 330065, 330433	330097, 330121	330256	
	(E39)	01/97-06/03	M51 D25	85	330356	330065, 330724		330256	
	Touring (E34)	03/93-01/97	M51 D25	85	330356	330046, 330065, 330433	330097, 330121	330256	
525 tds	(E34)	09/91-09/95	M51 D25 (Inter.)	105	330356	330046, 330065, 330433	330097, 330121	330239, 330256	
	(E39)	01/96-06/03	M51 D25 (Inter.)	105	330356	330065, 330724		330256	
	Touring (E34)	12/91-01/97	M51 D25 (Inter.)	105	330356	330046, 330065, 330433	330097, 330121	330239, 330256	
	Touring (E39)	03/97-05/04	M51 D25 (Inter.)	105	330356	330065, 330724		330256	
525d	Touring (E61)	12/04-	M57N 256 D4	120		330724	330643		
	(E60)	06/04-	M57N 256 D4	130	330356	330724	330643	330256	
	Touring (E61)	06/04-	M57N 256 D4	130	330356	330724	330643	330256	
	(E60)	01/07-	M57 306 D3	145		330724	330643		
	Touring (E61)	01/07-	M57 306 D3	145		330724	330643		
525i	(E60)	09/03-	M54 256 S5	141	330356	330724	330643, 330683	330256	
	Touring (E61)	06/04-	M54 256 S5	141	330356	330724	330643, 330683	330256	
	(E60)	07/05-	N52 B25 A	160	330356	330724	330643, 330683	330256	
	(E60)	01/07-	N53 B30 A	160		330724	330643		
	Touring (E61)	07/05-	N52 B25 A	160	330356	330724	330643, 330683	330256	
	Touring (E61)	01/07-	N53 B30 A	160		330724	330643		
525xd	(E60)	01/07-	M57 306 D3	145		330724	330643		
	Touring (E61)	01/07-	M57 306 D3	145		330724	330643		
525xi	(E60)	07/05-	N52 B25 A	160	330356	330724	330643, 330683	330256	
	(E60)	01/07-	N53 B30 A	160		330724	330643		
	Touring (E61)	07/05-	N52 B25 A	160	330356	330724	330643, 330683	330256	
	Touring (E61)	01/07-	N53 B30 A	160		330724	330643		
528 i	(E28)	06/81-12/87	M30 B28	135	330012	330046, 330416, 330419, 330426	330090, 330097, 330691	330239	
	(E39)	11/95-09/00	M52 B28	142	330356	330065, 330724	330643, 330683	330256	
	Touring (E39)	01/97-09/00	M52 B28	142	330356	330065, 330724	330643, 330683	330256	
530 d	(E39)	08/98-09/00	M57 D30	135	330356	330065, 330724		330256	
	Touring (E39)	08/98-09/00	M57 D30	135	330356	330065, 330724		330256	
	(E39)	09/00-06/03	M57 D30	142	330356	330065, 330724		330256	
	Touring (E39)	09/00-05/04	M57 D30	142	330356	330065, 330724		330256	
530 i	(E34)	01/88-08/91	M30 B30	138	330356	330433	330116, 330129, 330208	330239	
	(E39)	09/00-06/03	M54 306 S3	170	330356	330724	330643, 330683	330256	
	Touring (E39)	09/00-05/04	M54 306 S3	170	330356	330724	330643, 330683	330256	
530 i V8	(E34)	09/92-09/95	M60 B30	160	330356	330065, 330433	330115, 330129, 330208	330256	
	Touring (E34)	09/92-01/97	M60 B30	160	330356	330065, 330433	330115, 330129, 330208	330256	
530d	(E60)	07/03-	N57 306 D2	160	330356	330724	330643	330256	

OPS Oil Pressure Switches **BLS** Brake Light Switches **TT-RF** Temperature Transmitter and Radiator Fan Switches **RLS** Reverse Light Switches **VAR** Various

ERA S.p.A. Moncalieri (TO) Italy - tel: +39 011 6891511 - fax: +39 011 6472862 - www.eranet.it

Vehicle		Date	Engine	kW	OPS	BLS	TT-RF	RLS	VAR
530d	Touring (E61)	06/04-	N57 306 D2	160	330356	330724	330643	330256	
	(E60)	07/03-	M57 306 D3	170	330356	330724	330643	330256	
	Touring (E61)	07/05-	M57 306 D3	170	330356	330724	330643	330256	
	(E60)	01/07-	M57 306 D3	173		330724	330643		
	Touring (E61)	01/07-	M57 306 D3	173		330724	330643		
530i	(E60)	07/03-	M54 306 S3	170	330356	330724	330643, 330683	330256	
	Touring (E61)	06/04-	M54 306 S3	170	330356	330724	330643, 330683	330256	
	(E60)	03/05-	N52 B30 A	187		330724			
	(E60)	07/05-	N52 B30 A	190	330356	330724	330643, 330683	330256	
	Touring (E61)	07/05-	N52 B30 A	190	330356	330724	330643, 330683	330256	
	(E60)	01/07-	N53 B30 A	200		330724	330643, 330683		
	Touring (E61)	01/07-	N53 B30 A	200		330724	330643, 330683		
530xd	(E60)	07/05-	M57 306 D3	170	330356	330724	330643	330256	
	Touring (E61)	07/05-	M57 306 D3	170	330356	330724	330643	330256	
	(E60)	01/07-	M57 306 D3	173		330724	330643		
	Touring (E61)	01/07-	M57 306 D3	173		330724	330643		
530xi	(E60)	07/05-	N52 B30 A	190	330356	330724	330643, 330683	330256	
	Touring (E61)	07/05-	N52 B30 A	190	330356	330724	330643, 330683	330256	
	(E60)	01/07-	N53 B30 A	200		330724	330643		
	Touring (E61)	01/07-	N53 B30 A	200		330724	330643		
535 i	(E34)	01/88-09/95	M30 B35	155	330356	330433	330115, 330116, 330129, 330208	330239, 330256	
	(E39)	04/96-03/99	M62 B(35 8 S1), M62 B35	173	330356	330065, 330724	330683	330256	
	(E39)	04/99-06/03	M62 B(35 8 S2)	180	330356	330065, 330724	330683	330256	
535 i, M 535 i	(E28)	01/85-12/87	M30 B35	136	330012	330046, 330416, 330419, 330426	330116	330239	
	(E28)	01/85-12/87	M30 B35 (Motronic)	141	330012	330046, 330416, 330419, 330426	330116	330239	
	(E28)	01/85-12/87	M30 B35	160	330012	330046, 330416, 330419, 330426	330116	330239	
535d	(E60)	09/04-	M57 306 D4	200	330356	330724	330643		
	Touring (E61)	09/04-	M57 306 D4	200	330356	330724	330643		
	(E60)	01/07-	M57N 306 D5	210		330724	330643		
	Touring (E61)	01/07-	M57N 306 D5	210		330724	330643		
540 i	(E39)	04/96-06/03	M62 B44	210	330356	330065, 330724	330683	330256	
	Touring (E34)	09/93-01/97	M60 B40	210	330356	330065, 330433	330115, 330129, 330208	330256	
	Touring (E39)	01/97-05/04	M62 448 S2, M62 B44	210	330356	330065, 330724	330683	330256	
540 i V8	(E34)	09/92-09/95	M60 B40	210	330356	330433	330115, 330129, 330208	330256	
540i	(E60)	07/05-	N62 B40 A	225	330356	330724	330643, 330683		
	(E60)	08/05-	--	225	330356		330643, 330683		
545i	(E60)	09/03-	N62 B44	245	330356	330724	330643, 330683	330256	
	Touring (E61)	06/04-	N62 B44	245	330356	330724	330643, 330683	330256	

OPS Oil Pressure Switches **BLS** Brake Light Switches **TT-RF** Temperature Transmitter and Radiator Fan Switches **RLS** Reverse Light Switches **VAR** Various

Vehicle		Date	Engine	kW	OPS	BLS	TT-RF	RLS	VAR
550i	(E60)	07/05-	N62 B48 B	270	330356	330724	330643, 330683		
	Touring (E61)	07/05-	N62 B48 A	270	330356	330724	330643, 330683		
M 535 i	(E12)	06/80-08/81	M30 B35 (Motronic,9.3:1)	160	330012	330046, 330426	330208	330239	
M5	(E39)	10/98-06/03	S38 B49	294	330356	330724	330683	330256	
	(E60)	09/04-	S85 B50 A	373	330356	330724	330643, 330683		
	Touring (E61)	02/07-	S85 B50 A	373		330724	330643, 330683		
M5 3.5	(E28)	08/85-12/87	S38 B35	211	330012, 330356	330046, 330416, 330419, 330426	330116	330239	
M5 3.6	(E34)	10/88-05/92	S38 B36	232	330356	330433	330116, 330129, 330208	330239, 330256	
M5 3.6 CAT	(E34)	10/88-05/92	S38 B36 (Kat)	232	330356	330433	330116, 330129, 330208	330239, 330256	
M5 3.8	(E34)	03/92-09/95	S38 B38	250	330356	330065, 330433	330116, 330129, 330208	330256	
	Touring (E34)	09/94-01/97	S38 B38	250	330356	330065, 330433	330116, 330129, 330208	330256	
6			**04/76 -**						
628 CSi	(E24)	09/79-08/87	M30 B28	135		330416, 330419, 330426		330239	
630i	(E3)	09/04-	N52 B30 A	190	330356	330724	330643, 330683	330256	
	Convertible (E4)	09/04-	N52 B30 A	190	330356	330724	330643, 330683	330256	
	(E3)	07/07-	N52 B30 A	200		330724	330643, 330683		
	Convertible (E4)	07/07-	N52 B30 A	200		330724	330643, 330683		
633 CSi	(E24)	09/78-08/84	M30 B32, M30 B32 (L-Jetronic,9:1)	145		330426		330239	
635 CSi	(E24)	01/85-05/89	M30 B35 (Motronic,8:1, Kat.)	136		330416, 330419			
	(E24)	04/85-09/90	M30 B35	141		330416, 330419			
	(E24)	08/87-05/89	M30 B35	155		330416, 330419			
	(E24)	06/78-08/88	M30 B35 (L-Jetronic,10:1), M30 B35 (Motronic,10:1), M30 B35 (Motronic,9.3:1)	160		330416, 330419, 330426		330239	
635d	(E3)	07/07-	N57N 306 D5	210		330724	330643		
	Convertible (E4)	07/07-	M57N 306 D5	210		330724	330643		
645Ci	(E3)	01/04-	N62 B44, N62 B44 A	245	330356	330724	330643, 330683	330256	
	Convertible (E4)	04/04-	N62 B44, N62 B44 A	245	330356	330724	330643, 330683	330256	
650i	(E3)	07/05-	N62 B48 B	270	330356	330724	330643, 330683		
	Convertible (E4)	07/05-	N62 B48 B	270	330356	330724	330643, 330683		
M 635 CSi	(E24)	10/86-10/88	S38 B35 (Kat)	191		330419			
M 635 CSi	(E24)	03/84-05/89	S38 B35	211		330419			
M6	(E3)	09/05-	S85 B50 A	373		330724	330643, 330683		
	Convertible (E4)	07/06-	S85 B50 A	373		330724	330643, 330683		

Vehicle		Date	Engine	kW	OPS	BLS	TT-RF	RLS	VAR
7		**05/77 -**							
725 tds	(E38)	04/96-11/01	M51 D25 (Inter.)	105	330356	330065, 330724		330256	
728	(E23)	05/77-08/79	M30 B28	125	330012	330416, 330419	330090, 330208	330239	
728 i	(E23)	07/78-08/86	M30 B28	135	330012	330416, 330419, 330426	330097, 330208	330239	
728 i,iL	(E38)	08/95-11/01	M52 B28	142	330356	330065, 330724	330643, 330683	330256	
728i X	(E38)	11/95-09/01	--	142		330724	330643, 330683		
730	(E23)	05/77-08/79	M30 B30	135	330012	330416, 330419, 330426	330208	330239	
730 d	(E38)	08/98-04/00	M57 D30	135	330356	330724			
	(E38)	04/00-11/01	M57 306 D1	142	330356	330724			
	(E65, E66)	10/02-	M57N2 306 D2	160	330356	330724	330643		
730 i,iL	(E32)	12/86-09/94	M30 B30	138	330356	330046, 330416, 330419, 330426, 330433	330115, 330116, 330129, 330208	330239, 330256	
	(E32)	12/86-09/94	M30 B30	145	330356	330046, 330416, 330419, 330426, 330433	330115, 330116, 330129, 330208	330239, 330256	
	(E38)	10/94-11/01	M60 B30	155		330065	330115, 330129	330256	
	(E38)	10/94-11/01	M60 B30	160		330065	330115, 330129	330256	
730 i,iL V8	(E32)	04/92-09/94	M60 B30	160	330356	330433	330115, 330129, 330208	330256	
730 i,Li	(E65, E66)	03/03-	M54 306 S3	170	330356	330724	330643, 330683		
	(E65, E66)	03/05-	N52 B30 A	190	330356	330724	330643, 330683		
730 Ld	(E65, E66)	07/05-	N57N 306 D2	170	330356	330724	330643		
730d	(F01, F02, F03, F04)	10/08-	N57 D30 A	180		330724			
733 i	(E23)	05/77-09/79	M30 B32, M30 B32 (L-Jetronic,9:1), M30 B32 (Motronic,10:1)	145	330012	330416, 330419, 330426	330208	330239	
735 i	(E23)	01/85-08/86	M30 B35 (Motronic,8:1,Kat.)	136		330416, 330419			
	(E23)	04/85-08/86	M30 B35 (Motronic)	141	330012	330416, 330419, 330426		330239	
	(E23)	09/79-08/86	M30 B35 (Motronic,10:1), M30 B35 (Motronic,9.3:1)	160		330416, 330419			
735 i,iL	(E32)	09/86-09/92	M30 B35	155	330356	330046, 330416, 330419, 330426, 330433	330115, 330116, 330129, 330208	330239, 330256	
	(E32)	09/86-12/87	M30 B35 (Motronic,9.2:1)	162	330356	330046, 330416, 330419, 330426, 330433	330115, 330116, 330129, 330208	330239	
	(E38)	01/96-11/01	M62 B(35 8 S1)	173	330356	330065, 330724	330683	330256	
735 i,Li	(E65, E66)	11/01-	N62 B36	200	330356	330724	330643, 330683		
740 d	(E38)	05/99-11/01	M67 D39	180	330356	330724			
740 d	(E65, E66)	10/02-	N67 398 D1	190	330356	330724			
740 i,iL	(E38)	10/94-11/01	M60 B40	210		330065	330115, 330129	330256	
	(E38)	01/96-11/01	M62 B44	210	330356	330065, 330724	330683	330256	

OPS Oil Pressure Switches **BLS** Brake Light Switches **TT-RF** Temperature Transmitter and Radiator Fan Switches **RLS** Reverse Light Switches **VAR** Various

Vehicle		Date	Engine	kW	OPS	BLS	TT-RF	RLS	VAR
740 i,iL V8	(E32)	04/92-09/94	M60 B40	210	330356	330433	330115, 330129, 330208		
740 i,Li	(E65, E66)	07/05-	N62 B40 A	225	330356	330724	330643, 330683		
740i	(F01, F02, F03, F04)	10/08-	N54 B30 A	240		330724	330643		
745 d	(E65, E66)	03/05-08/05	N67N 448 D1	220		330724			
	(E65, E66)	07/05-	N67N 448 D2	242	330356	330724			
745 i	(E23)	04/80-04/83	M30 B32 (Turbo), M30 B32 (Turbo,8:1)	185		330416, 330419			
	(E23)	05/83-08/86	M30 B35	185		330416, 330419			
745 i,Li	(E65, E66)	11/01-	N62 B44	245	330356	330724	330643, 330683		
750 i,iL	(E38)	12/94-11/01	M73 B54	240	330356	330724	330683		
750 i,iL V12	(E32)	09/87-09/94	M70 B50	220		330046, 330416, 330419, 330426, 330433	330115, 330129, 330208		
750 i,Li	(E65, E66)	07/05-	N62 B48 B	270	330356	330724	330643, 330683		
750i	(F01, F02, F03, F04)	10/08-	N63 B44 A	300		330724	330643, 330683		
760 i,Li	(E65, E66)	01/03-	N73 B60	327	330356	330724	330643, 330683		
8			**04/90 - 12/99**						
840 Ci	(E31)	01/96-12/99	M62 B44, M62 B44 TU	210	330356	330065, 330416, 330419	330208	330256	
840 i	(E31)	02/93-02/96	M60 B40	210		330065, 330416, 330419	330115, 330129, 330208	330256	
850 Ci	(E31)	09/94-12/99	M73 B54	240	330356	330416, 330419	330208		
850 CSi	(E31)	04/93-12/96	M70 B56	280		330065, 330416, 330419	330115, 330129, 330208	330256	
850 i,Ci	(E31)	04/90-10/94	M70 B50	220		330065, 330416, 330419, 330433	330115, 330129, 330208	330256	
X3			**01/04 -**						
2.0 d	(E83)	10/04-	M47N 204 D4	110	330356	330724	330643	330256	
	(E83)	09/07-	N47 D20 A	130		330724			
2.0 i	(E83)	07/05-	N46 B20 A	110	330356	330724	330643, 330683	330256	
2.5 i	(E83)	01/04-	M54 256 S5	141	330356	330724	330643, 330683	330256	
2.5 si	(E83)	09/06-	N52 B25 A	160	330356	330724	330643	330256	
3.0 d	(E83)	01/04-	M54N 306 D2	150	330356	330724	330643	330256	
	(E83)	01/04-	M57N2 306 D2	160	330356	330724	330643	330256	
3.0 i	(E83)	01/04-	M54 306 S3	170	330356	330724	330643, 330683	330256	
3.0 sd	(E83)	09/06-	M57 306 D5	210	330356	330724	330643		
3.0 si	(E83)	09/06-	N52 B30 A	200	330356	330724	330643	330256	
X5			**05/00 -**						
3.0 d	(E53)	05/01-	M57 306 D1	135	330356	330724		330256	
	(E53)	12/03-	M57N 306 D4	160	330356	330724		330256	
	(E70)	02/07-	M57 306 D3	173		330724	330643		
3.0 i	(E53)	05/00-	M54 306 S3	163	330356	330724	330643, 330683	330256	

OPS Oil Pressure Switches **BLS** Brake Light Switches **TT-RF** Temperature Transmitter and Radiator Fan Switches **RLS** Reverse Light Switches **VAR** Various

ERA S.p.A. Moncalieri (TO) Italy - tel: +39 011 6891511 - fax: +39 011 6472862 - www.eranet.it

Vehicle		Date	Engine	kW	OPS	BLS	TT-RF	RLS	VAR
3.0 i	(E53)	05/00-	M54 306 S3	170	330356	330724	330643, 330683	330256	
3.0 sd	(E70)	09/07-	M57N 306 D5	210		330724	330643		
3.0 si	(E70)	02/07-	N52 B30 A	200	330356	330724	330643, 330683		
4.4 i	(E53)	05/00-	M62 B44	210	330356	330724	330683		
	(E53)	12/03-	N62 B44 A	235	330356	330724	330683		
4.6 is	(E53)	02/02-	M67 468 S1	255	330356	330724	330683		
4.8 i	(E70)	02/07-	N62 B48 B	261	330356	330724	330643, 330683		
4.8 is	(E53)	04/04-	N62 B48 A	265	330356	330724	330683		
X6			**05/08 -**						
30d	(E71, E72)	05/08-	M57N2 306 D3	173		330724	330643		
35d	(E71, E72)	05/08-	N57N 306 D5	210		330724	330643		
35i	(E71, E72)	05/08-	N54 B30 A	225		330724	330643		
50i	(E71, E72)	05/08-	N63 B44 A	300		330724	330643, 330683		
xDrive30d	(E71, E72)	09/08-	N57 D30 A	173		330724	330643		
xDrive35d	(E71, E72)	09/08-	N57N 306 D5	210		330724	330643		
xDrive35i	(E71, E72)	09/08-	N54 B30 A	225		330724	330643		
xDrive50i	(E71, E72)	09/08-	N63 B44 A	300		330724	330643, 330683		
Z1			**06/88 - 06/91**						
2.5		06/88-06/91	M20 B25	125	330356	330046	330097, 330116	330239	
Z3			**10/95 - 06/03**						
1.8	(E36)	10/95-10/98	M43 B18	85	330356	330065, 330433	330208	330256	
1.9	(E36)	07/98-01/03	M43 194 E1, M43 B19	87	330356	330065, 330433	330643	330256	
	(E36)	10/95-03/99	M44 B19	103	330356	330065, 330433	330208	330256	
2.0	(E36)	04/99-01/03	M52 B(20 6 S4)	110	330356	330065, 330433	330643	330256	
2.2	(E36)	08/00-01/03	M54 226 S1, M54 B22	125	330356	330433	330643	330256	
2.8	(E36)	04/97-06/00	M52 B28	141	330356	330065, 330433	330643	330256	
	Coupe (E36)	07/97-06/00	M52 B28	141	330356	330065, 330433	330643	330256	
3.0	(E36)	06/00-01/03	M54 306 S3	170	330356	330433	330643	330256	
	Coupe (E36)	06/00-06/03	M54 306 S3	170	330356	330433	330643	330256	
M 3.2	(E36)	03/97-06/01	S50 B32	236	330356	330065, 330433		330256	
	Coupe (E36)	02/98-06/01	S50 B32	236	330356	330065, 330433		330256	
	(E36)	06/01-01/03	S54 B32 (32 6 S4)	239	330356	330433	330643	330256	
	Coupe (E36)	06/01-06/03	S54 326 S4	239	330356	330433	330643	330256	
Z4			**02/03 -**						
2.0 i	(E85)	04/05-	N46 B20 A	110	330356	330724	330643, 330683	330256	
2.2 i	(E85)	10/03-	M54 226 S1	125	330356	330724	330643, 330683	330256	
2.5 i	(E85)	01/06-	N52 B25 A	130	330356	330724	330643, 330683	330256	
	(E85)	02/03-	M54 256 S5	141	330356	330724	330643, 330683	330256	
2.5 si	(E85)	01/06-	N52 B25 A	160	330356	330724	330643, 330683	330256	

OPS Oil Pressure Switches **BLS** Brake Light Switches **TT-RF** Temperature Transmitter and Radiator Fan Switches **RLS** Reverse Light Switches **VAR** Various

Vehicle		Date	Engine	kW	OPS	BLS	TT-RF	RLS	VAR
3.0 i	(E85)	02/03-	M54 306 S3	170	330356	330724	330643, 330683	330256	
3.0 si	(E85)	01/06-	N52 B30 A	195	330356	330724	330643, 330683	330256	
	Coupe (E86)	03/06-	N52 B30 A	195	330356	330724	330643, 330683	330256	
3.2 M	(E85)	03/06-	S54 326 S4	252	330356	330724	330643, 330683	330256	
	Coupe (E86)	03/06-	S54 326 S4	252	330356	330724	330643, 330683	330256	
sDrive23i	(E89)	05/09-	N52 B25 A	150		330724			
sDrive30i	(E89)	05/09-	N52 B30 A	190		330724			
sDrive35i	(E89)	05/09-	N54 B30 A	225		330724			
Z8			**06/00 - 06/03**						
4.9	(E52)	06/00-06/03	S38 B49, S62 B50	294	330356	330724	330683	330256	
CHEVROLET									
AVEO			**05/05 -**						
1.2	Saloon (T200, T250)	03/06-	F12S3	53	330009, 330567		330582, 330651, 330665	330571	
	Hatchback (T200, T250)	04/08-	B12D1	62			330651, 330665		
1.4	Saloon (T200, T250)	03/06-	F14D3	69	330364		330107, 330582, 330665	330244, 330571	
EPICA			**01/05 -**						
2.0	(KL1_)	06/06-	X 20 D1	105	330364		330651	330244	
2.5	(KL1_)	06/06-	X 25 D1	115	330364		330651		
EVANDA			**03/05 -**						
2.0		03/05-	X 20 SED	96	330364		330089, 330107	330244	
KALOS			**03/05 -**						
1.2		03/05-	B12S1	53	330009, 330567		330582, 330651, 330665		
	Saloon	03/05-	F12S3	53			330651, 330665		
1.4		03/05-	F14S3	61	330364		330107, 330582, 330665	330244	
	Saloon	03/05-	F14S3	61			330665		
1.4 16V		03/05-	F14D3	69	330364		330107, 330582, 330665	330244	
	Saloon	03/05-	F14D3	69	330364		330107, 330582, 330665	330244	
LACETTI			**03/05 -**						
1.4 16V		03/05-	F14D3	70	330364		330107	330244	
1.6		03/05-	F16D3	80	330364		330107	330244	
1.8		03/05-	T18SED	90	330364		330089, 330107	330244	
MATIZ			**03/05 -**						
0.8		03/05-	F8CV	38	330009, 330567		330107, 330582, 330665	330570, 330571	
1.0		03/05-	B10S	47	330009, 330567		330582, 330651, 330665	330570, 330571	

OPS Oil Pressure Switches **BLS** Brake Light Switches **TT-RF** Temperature Transmitter and Radiator Fan Switches **RLS** Reverse Light Switches **VAR** Various

ERA S.p.A. Moncalieri (TO) Italy - tel: +39 011 6891511 - fax: +39 011 6472862 - www.eranet.it

Vehicle		Date	Engine	kW	OPS	BLS	TT-RF	RLS	VAR
1.0		03/05-	B10S1	49	330009, 330567		330582, 330651, 330665	330570, 330571	
NUBIRA			**01/05 -**						
1.6	Estate	03/05-	F16D3	80	330364		330107	330244	
	Saloon	03/05-	F16D3	80	330364		330107	330244	
1.8	Estate	03/05-	T18SED	90	330364		330089, 330107	330244	
	Saloon	03/05-	T18SED	90	330364		330089, 330107	330244	
REZZO			**03/05 -**						
1.6		03/05-	A16DMS	77	330364		330089	330244	
		08/05-	A16DMS	79	330364		330089	330244	
2.0		03/05-	T20SED	89	330364		330089, 330107	330244	
		08/05-	T20SED	90	330364		330089, 330107	330244	
SPARK			**09/00 -**						
1.0		11/02-	G 10 CV	47			330651		
	(M300)	03/10-	B10D1	50			330582, 330651, 330665		
1.0 SX		05/05-	--	46			330651		
1.2	(M300)	03/10-	B12D1	60			330582, 330651, 330665		
CHRYSLER									
LE BARON			**09/86 - 12/94**						
2.2 i		09/86-12/94	--	69			330650		
2.2 i Turbo		09/86-01/91	EDR	130			330650		
2.5 i		09/86-12/94	EDM	75			330650		
2.5 i Turbo		01/89-12/94	EDT	112			330650		
3.0 i V6		01/90-12/94	EFA	105			330650		
NEON			**05/94 - 02/00**						
2.0 16V	(PL)	05/94-08/99	420H	98			330650		
	(PL)	06/94-08/99	ECC	107			330650		
	(PL)	04/96-08/99	420T	109			330650		
NEW YORKER			**04/93 - 09/98**						
3.5 i 24V		04/93-09/98	F01	155			330650		
VOYAGER			**08/90 - 09/95**						
2.5 i	II (ES)	01/91-09/95	K00	72			330650		
3.0 i	II (ES)	01/91-09/95	300, 6G72	108			330650		
CITROËN									
2 CV			**03/63 - 07/90**						
6		02/70-10/85	A06/635, A06/664	21		330686			

OPS Oil Pressure Switches **BLS** Brake Light Switches **TT-RF** Temperature Transmitter and Radiator Fan Switches **RLS** Reverse Light Switches **VAR** Various

Vehicle		Date	Engine	kW	OPS	BLS	TT-RF	RLS	VAR
ACADIANE		**08/78 - 10/88**							
6		08/78-10/88	M28 (AM2)	22		330686			
AX		**07/86 - 12/98**							
1.3 Sport	(ZA-_)	04/87-12/88	M4A	70	330010	330036, 330438, 330704	330086, 330158, 330172, 330188, 330269	330236, 330249	
1.4 GTi	(ZA-_)	08/91-12/96	KFY (TU3FJ2)	66	330010	330036, 330438, 330704	330110, 330116, 330147, 330172, 330188, 330269, 330588	330236, 330249	
	(ZA-_)	06/91-12/96	KFZ (TU3FJ2)	69	330010	330036, 330438, 330704	330110, 330116, 330147, 330172, 330188, 330269, 330588	330236, 330249	
	(ZA-_)	06/91-12/92	KFZ (TU3FJ2)	74	330010	330036, 330438, 330704	330110, 330116, 330147, 330172, 330188, 330269, 330588	330236, 330249	
10	(ZA-_)	09/86-06/92	C1A	32	330010	330036, 330438, 330704	330086, 330147, 330158, 330172, 330188, 330269, 330637	330236, 330249	
	(ZA-_)	07/86-12/98	CDY (TU9M)	33	330010	330036, 330438, 330704	330116, 330122, 330147, 330158, 330172, 330188, 330269, 330637	330236, 330249	
	(ZA-_)	02/87-12/98	CDZ (TU9M)	37	330010	330036, 330438, 330704	330116, 330122, 330147, 330158, 330172, 330188, 330269, 330637	330236, 330249	
10 E	(ZA-_)	12/86-12/88	C3A	30	330010	330036, 330438, 330704	330086, 330147, 330158, 330172, 330188, 330269, 330637	330236, 330249	
11	(ZA-_)	12/86-04/94	H1A, H1B	40	330010	330036, 330438, 330704	330086, 330147, 330158, 330172, 330188, 330269, 330637	330236, 330249	
	(ZA-_)	09/86-12/97	H1B, HDZ (TU1M)	44	330010	330036, 330438, 330704	330086, 330110, 330116, 330147, 330158, 330172, 330188, 330269, 330637	330236, 330249	
11 4x4	(ZA-_)	06/91-07/92	H1A	40	330010	330036, 330438, 330704	330086, 330147, 330158, 330172, 330188, 330269, 330637	330236, 330249	
11 CAT	(ZA-_)	09/88-12/89	HAZ (TU1CP)	40	330010	330036, 330438, 330704	330086, 330147, 330158, 330172, 330188, 330269, 330637	330236, 330249	
14	(ZA-_)	12/86-12/88	KAY (TU3CP)	44	330010	330036, 330438, 330704	330086, 330158, 330172, 330188, 330269	330236, 330249	
	(ZA-_)	06/88-12/89	K1F	49	330010	330036, 330438, 330704	330086, 330158, 330172, 330188, 330269	330236, 330249	

OPS Oil Pressure Switches **BLS** Brake Light Switches **TT-RF** Temperature Transmitter and Radiator Fan Switches **RLS** Reverse Light Switches **VAR** Various

ERA S.p.A. Moncalieri (TO) Italy - tel: +39 011 6891511 - fax: +39 011 6472862 - www.eranet.it

Vehicle		Date	Engine	kW	OPS	BLS	TT-RF	RLS	VAR
14	(ZA-_)	01/89-12/91	K1G	51		330704			
	(ZA-_)	04/87-04/97	KDX (TU3M/Z), KDY (TU3FM), KDY (TU3M), KDZ (TU3M/Z)	55	330010	330036, 330438, 330704	330086, 330116, 330147, 330158, 330172, 330188, 330269, 330588, 330637	330236, 330249	
	(ZA-_)	01/88-12/92	K2A	61		330704			
	(ZA-_)	01/88-12/92	K2A, K2B	62	330010	330036, 330438, 330704	330086, 330158, 330172, 330188, 330269	330236, 330249	
14 4x4	(ZA-_)	08/91-12/96	KDX (TU3M/Z), KDY (TU3FM), KDY (TU3M), KDZ (TU3M/Z)	55	330010	330036, 330438, 330704	330086, 330116, 330147, 330158, 330172, 330188, 330269, 330588, 330637	330236, 330249	
14 D	(ZA-_)	08/91-12/97	K9Y (TUD3Y)	37	330010, 330023	330036, 330438, 330704	330147, 330188	330236, 330249	
	(ZA-_)	09/88-06/92	K9A (TUD3)	38	330010, 330023	330036, 330438, 330704	330147, 330188	330236, 330249	
15 D	(ZA-_)	08/94-12/97	VJY (TUD5)	40	330023	330036, 330438, 330704	330134, 330271, 330637	330236, 330249	
	(ZA-_)	08/94-12/97	VJZ (TUD5)	43	330023	330036, 330438, 330704	330134, 330271, 330637	330236, 330249	
BERLINGO		**07/96 -**							
1.1 i	(MF)	07/96-	HDZ (TU1M), HFX (TU1JP)	44	330010, 330026	330060, 330704, 330716	330122, 330147, 330154, 330188, 330551, 330588, 330637	330249, 330513	
	Box (M_)	07/96-	HDZ (TU1M)	44	330010	330060, 330704	330122, 330147, 330154, 330188, 330588	330249, 330513	
1.4	(MF)	11/02-10/05	--	53	330026	330718	330637	330513	
	(MF)	05/05-	--	54	330026	330718		330513	
1.4 bivalent	(MF)	11/02-	--	48	330026	330718	330551, 330637	330513	
	Box (M_)	11/02-	--	48	330026	330718	330551, 330637	330513	
	(MF)	11/02-10/05	--	53	330026	330718	330637	330513	
1.4 GNC	(MF)	11/02-	--	48	330026	330718	330551, 330637	330513	
1.4 i	(MF)	07/96-	KFW (TU3JP), KFX (TU3JP)	55	330010, 330026	330060, 330704, 330718	330122, 330147, 330154, 330188, 330551, 330588, 330637	330249, 330513	
	Box (M_)	07/96-	KFW (TU3JP), KFX (TU3JP)	55	330010, 330026	330060, 330704, 330718	330122, 330147, 330154, 330188, 330551, 330588, 330637	330249, 330513	
1.4 i bivalent	(MF)	04/03-	KFW (TU3JP)	55	330026	330718	330551, 330637	330513	
	Box (M_)	04/03-	KFW (TU3JP)	55	330026	330718	330551, 330637	330513	
1.6		04/08-	NFR (TU5JP4B)	66	330026	330629, 330722	330552, 330637	330681	
	Box	04/08-	NFR (TU5JP4B)	66	330026	330629, 330722	330552, 330637	330681	
		04/08-	NFU (TU5JP4)	80	330026	330629, 330722	330552, 330637	330681	
	Box	04/08-	NFU (TU5JP4)	80	330026	330629, 330722	330552, 330637	330681	

OPS Oil Pressure Switches **BLS** Brake Light Switches **TT-RF** Temperature Transmitter and Radiator Fan Switches **RLS** Reverse Light Switches **VAR** Various

Vehicle		Date	Engine	kW	OPS	BLS	TT-RF	RLS	VAR
1.6	(MF)	11/02-	--	81	330026		330552		
1.6 16V	(MF)	10/00-	NFU (TU5JP4)	80	330026	330060, 330704, 330718	330551, 330552, 330637	330681	
	Box (M_)	10/00-	NFU (TU5JP4)	80	330026	330060, 330704, 330718	330551, 330552, 330637	330681	
	(MF)	11/02-	NFU (TU5JP4)	81	330026	330718	330552, 330637	330681	
1.6 HDi 110		04/08-	9HZ-DV6TED4	80	330026	330629, 330722	330502	330681	
	Box	04/08-	9HZ-DV6TED4	80	330026	330629, 330722	330502	330681	
		07/10-	--	82		330722		330681	
1.6 HDi 75		04/08-	9HT (DV6BTED4)	55	330026	330629, 330722	330502	330681	
1.6 HDI 75	(MF)	07/05-	DV6B	55	330026	330718, 330722	330502	330681	
1.6 HDi 75	Box	04/08-	9HN (DV6ETED)	55	330026	330629, 330722	330502	330681	
1.6 HDI 75	Box (M_)	07/05-	DV6B	55	330026	330718, 330722	330502	330681	
1.6 HDi 90		04/08-	9HX (DV6ATED4)	66	330026	330629, 330722	330502	330681	
1.6 HDI 90	(MF)	07/05-	DV6ATED4	66	330026	330718, 330722	330502	330681	
1.6 HDi 90	Box	04/08-	9HX (DV6ATED4)	66	330026	330629, 330722	330502	330681	
1.6 HDI 90	Box (M_)	07/05-	DV6ATED4	66	330026	330718, 330722	330502	330681	
1.6 VTi 120		11/09-	5FS (EP6C)	88		330722		330681	
1.6 VTi 95		07/10-	5FK (EP6 CB)	72		330722		330681	
	Box	07/10-	5FK (EP6 CB)	72		330722		330681	
1.8 D	(MF)	07/98-	A9A (XUD7)	43	330023, 330026	330060, 330704	330109, 330134, 330147, 330194, 330271, 330588	330251, 330681	
	Box (M_)	07/96-	A9A (XUD7)	43	330023, 330026	330060, 330704	330109, 330134, 330147, 330194, 330271, 330588	330251, 330681	
	(MF)	11/96-10/99	A9A (XUD7)	44		330704		330681	
1.8 i	(MF)	05/97-	LFX (XU7JB)	66	330023, 330026	330060, 330704	330109, 330122, 330147, 330188, 330588	330251, 330681	
	Box (M_)	08/99-10/02	LFX (XU7JB)	66	330023, 330026	330060, 330704	330109, 330122, 330147, 330188, 330588	330251, 330681	
1.8 i 4WD	(MF)	04/97-	LFX (XU7JB)	66	330023, 330026	330060, 330704	330109, 330122, 330147, 330188, 330588	330251, 330681	
1.9 D	(MF)	07/96-	D9B (XUD9A/L), DJY (XUD9A)	50	330023, 330026	330060, 330704	330109, 330134, 330147, 330194, 330271, 330588, 330639	330251, 330681	
	(MF)	07/98-	WJY (DW8B), WJZ (DW8)	51	330026	330060, 330704, 330716	330155, 330194, 330624	330251, 330681	
	Box (M_)	07/96-	DJY (XUD9A)	51	330023, 330026	330060, 330704	330109, 330134, 330147, 330194, 330271, 330588, 330639	330251, 330681	
1.9 D 4WD	(MF)	07/98-	WJZ (DW8)	51	330026	330060, 330704	330155, 330194, 330624	330251, 330681	
1.9 D 70	Box (M_)	04/99-	WJZ (DW8)	51	330026	330060, 330704	330155, 330194, 330624	330251, 330681	

OPS Oil Pressure Switches **BLS** Brake Light Switches **TT-RF** Temperature Transmitter and Radiator Fan Switches **RLS** Reverse Light Switches **VAR** Various

ERA S.p.A. Moncalieri (TO) Italy - tel: +39 011 6891511 - fax: +39 011 6472862 - www.eranet.it

Vehicle		Date	Engine	kW	OPS	BLS	TT-RF	RLS	VAR
1.9 D 70 4WD	Box (M_)	07/98-	WJZ (DW8)	51	330026	330060, 330704	330155, 330194, 330624	330251, 330681	
2.0 HDi	(MF)	11/02-10/05	DW10TD	66	330026	330718	330502	330681	
2.0 HDi 4x4	(MF)	11/02-10/05	DW10TD	66	330026	330718	330502	330681	
2.0 HDI 90	(MF)	12/99-	RHY (DW10TD)	66	330026	330060, 330704, 330718	330194, 330502, 330742	330251, 330681	
	Box (M_)	12/99-	RHY (DW10TD)	66	330026	330060, 330704, 330718	330194, 330502, 330742	330251, 330681	
2.0 HDI 90 4WD	Box (M_)	11/00-	RHY (DW10TD)	66	330026	330060, 330704, 330718	330194, 330502, 330742	330251, 330681	
Electric	(MF)	11/02-	--	27		330716			
	Box (M_)	11/04-	--	27		330716			
electrique	(MF)	01/00-	--	16		330060, 330704, 330716			
BX		**10/82 - 12/94**							
1.6	(XB-_)	01/87-01/92	B6D	85	330010	330438	330116, 330203, 330527	330236, 330251	
14	Break (XB-_)	01/86-02/93	150C	53	330010	330438	330086, 330158, 330167	330236, 330249	
	(XB-_)	01/89-02/93	KDY (TU3M), KDZ (TU3M/Z)	55	330010	330438	330086, 330110, 330158, 330167	330236, 330249	
	Break (XB-_)	01/89-02/93	KDY (TU3M)	55	330010	330438	330086, 330110, 330158, 330167	330236, 330249	
14 E	(XB-_)	10/82-06/88	150A	45	330010	330438	330086, 330158, 330167	330236, 330249	
	(XB-_)	04/83-07/89	150C	52	330010	330438	330086, 330158, 330167	330236, 330249	
	(XB-_)	04/83-02/93	150C	53	330010	330438	330086, 330158, 330167	330236, 330249	
15	(XB-_)	10/87-05/92	B1E (XU51C)	59	330010	330438	330203, 330527	330236, 330251	
	Break (XB-_)	10/87-05/92	B1E (XU51C)	59	330010	330438	330203, 330527	330236, 330251	
16	(XB-_)	01/87-02/93	B1E (XU51C)	53	330010	330438	330203, 330527	330236, 330251	
	Break (XB-_)	09/88-12/94	B1E (XU51C)	53	330010	330438	330203, 330527	330236, 330251	
	(XB-_)	09/88-02/93	BAY (XU5CP), BAZ (XU5CP)	55	330010	330438	330203, 330527	330236, 330251	
	Break (XB-_)	09/88-12/94	BAY (XU5CP), BAZ (XU5CP)	55	330010	330438	330203, 330527	330236, 330251	
	(XB-_)	09/87-02/93	B1A (XU51C/K)	58	330010	330438	330203, 330527	330236, 330251	
	(XB-_)	07/85-02/93	171D	64	330010	330438	330203, 330527	330236, 330251	
	Break (XB-_)	07/85-12/94	171D	64	330010	330438	330203, 330527	330236, 330251	
	Break (XB-_)	05/89-12/94	BDY (XU5M), BDZ (XU5M)	65	330010	330438	330110, 330203, 330527	330236, 330251	
	(XB-_)	10/82-06/88	171A, 171B, 171C	66	330010	330438	330203, 330527	330236, 330251	
	Break (XB-_)	06/85-06/88	171A, 171B, 171C	66	330010	330438	330203, 330527	330236, 330251	
	(XB-_)	03/86-02/93	180Z	76	330010	330438	330116, 330203, 330527	330236, 330251	
	Break (XB-_)	03/86-12/94	180Z	76	330010	330438	330116, 330203, 330527	330236, 330251	
16 E	(XB-_)	05/89-02/93	BDY (XU5M), BDZ (XU5M)	65	330010	330438	330110, 330203, 330527	330236, 330251	

OPS Oil Pressure Switches **BLS** Brake Light Switches **TT-RF** Temperature Transmitter and Radiator Fan Switches **RLS** Reverse Light Switches **VAR** Various

Vehicle		Date	Engine	kW	OPS	BLS	TT-RF	RLS	VAR
18 D	Break (XB-_)	10/85-09/93	161A (XUD7)	44	330010	330438	330086, 330158, 330267, 330272, 330527	330236, 330251	
19	(XB-_)	09/86-11/89	D2C (XU92C)	70	330010	330438	330203, 330527	330236, 330251	
	Break (XB-_)	12/87-12/89	D2C (XU92C)	70	330010	330438	330203, 330527	330236, 330251	
	(XB-_)	07/86-05/89	159A	75	330010	330438	330203, 330527	330236, 330251	
	Break (XB-_)	07/86-12/94	D2A (XU92C)	75	330010	330438	330203, 330527	330236, 330251	
	(XB-_)	07/86-05/89	D2A (XU92C)	77	330010	330438	330203, 330527	330236, 330251	
	Break (XB-_)	06/88-12/94	DDZ (XU9M)	80	330010	330438	330086, 330110, 330116, 330203, 330527	330236, 330251	
19 4x4	Break (XB-_)	10/90-05/91	DDZ (XU9M)	80	330010	330438	330086, 330110, 330116, 330203, 330527	330236, 330251	
19 CAT	Break (XB-_)	07/86-12/94	DFZ (XU9J1)	75	330010	330438	330116, 330203, 330527	330236, 330251	
19 D	(XB-_)	09/83-12/87	162 (XUD9), DJZ (XUD9Y)	47	330010	330438	330086, 330158, 330267, 330272, 330527	330236, 330251	
	Break (XB-_)	09/83-12/87	162 (XUD9), DJZ (XUD9Y)	47	330010	330438	330086, 330158, 330267, 330272, 330527	330236, 330251	
	(XB-_)	03/87-02/93	D9B (XUD9A/U)	51	330010	330438	330086, 330158, 330267, 330272, 330527	330236, 330251	
	Break (XB-_)	03/87-12/94	D9B (XUD9A/U)	51	330010	330438	330086, 330158, 330267, 330272, 330527	330236, 330251	
19 E	(XB-_)	06/88-02/93	DDZ (XU9M)	80	330010	330438	330086, 330110, 330116, 330203, 330527	330236, 330251	
19 E 4x4	(XB-_)	04/89-02/93	D2F	80	330010	330438	330203, 330527	330236, 330251	
19 GTi	(XB-_)	06/88-02/93	DKZ (XU9JA)	88	330010	330438	330116, 330203, 330527	330236, 330251	
	(XB-_)	07/86-02/93	D6A (XU9J2)	90	330010	330438	330116, 330203, 330527	330236, 330251	
19 GTi 16V	(XB-_)	03/88-02/93	DFW (XU9J4)	108	330010	330438	330086, 330116, 330207	330236, 330251	
	(XB-_)	09/87-12/88	D6C (XU9J4)	116	330010	330438	330086, 330116, 330207	330236, 330251	
19 GTi 4x4	(XB-_)	06/88-02/93	DKZ (XU9JA)	88	330010	330438	330116, 330203, 330527	330236, 330251	
TRD Turbo	(XB-_)	03/88-02/93	A8A (XUD7TE), AJZ (XUD7TE)	66	330010	330438	330086, 330158, 330207, 330527	330236, 330251	
	Break (XB-_)	03/88-12/94	A8A (XUD7TE), AJZ (XUD7TE)	66	330010	330438	330086, 330158, 330207, 330527	330236, 330251	
C-CROSSER			**02/07 -**						
2.2 HDi	(EP_)	02/07-	4HN (DW12MTED4)	115	330026	330081, 330738	330502		
2.4 16V	(EP_)	08/08-	SFZ (4B12-MMC)	125		330081, 330738			
C1			**06/05 -**						
1.0	(PM_, PN_)	06/05-	1KR-FE	50	330022	330723		330752	

OPS Oil Pressure Switches **BLS** Brake Light Switches **TT-RF** Temperature Transmitter and Radiator Fan Switches **RLS** Reverse Light Switches **VAR** Various

ERA S.p.A. Moncalieri (TO) Italy - tel: +39 011 6891511 - fax: +39 011 6472862 - www.eranet.it

Vehicle		Date	Engine	kW	OPS	BLS	TT-RF	RLS	VAR
1.4 HDi	(PM_, PN_)	06/05-	DV4D	40	330026	330723	330502		
C15			**10/84 - 12/05**						
1.0	(VD-_)	10/84-12/97	TU9, XV8	33	330010	330438	330158, 330563	330236, 330249	
1.0 E	(VD-_)	11/92-07/96	--	37			330167	330236	
1.1	(VD-_)	10/84-12/96	109K, E1A	35	330344		330086, 330158, 330167, 330207	330236	
	(VD-_)	11/88-07/96	H1A	40	330010	330438	330158, 330563	330236, 330249	
1.1 i	(VD-_)	07/88-12/96	HDZ (TU1M)	44	330010	330438	330116, 330563	330236, 330249	
1.3	(VD-_)	07/87-05/88	G1A	47	330344		330086, 330158, 330207	330236	
1.4	(VD-_)	07/87-12/96	K1H (TU3A)	49	330010	330438	330086, 330158, 330563	330236, 330249	
1.4 E	(VD-_)	07/87-12/96	K3A	40	330010	330438	330086, 330158, 330563	330236, 330249	
	(VD-_)	05/87-12/96	150D (XY7)	44			330086, 330167	330236	
1.4 i	(VD-_)	05/91-12/96	KDY (TU3FM), KDY (TU3M)	55	330010	330438	330116, 330563	330236, 330249	
1.8 D	(VD-_)	07/86-12/00	161A (XUD7)	44	330010		330134, 330203, 330207, 330267, 330527, 330639	330236, 330251, 330681	
1.9 D	(VD-_)	12/00-12/05	--	44	330026		330203	330251, 330681	
C2			**09/03 -**						
1.1	(JM_)	09/03-	HFX (TU1JP)	44	330026	330629, 330718	330624, 330637	330513	
1.4	(JM_)	09/03-	KFV (TU3JP)	54	330026	330629, 330718, 330722	330624, 330637	330513	
	(JM_)	10/06-	TU 3 JP	55		330718, 330722	330637		
1.4 16V	(JM_)	06/06-	KFU (ET3J4)	65	330026	330629, 330718, 330722	330552	330513	
1.4 HDi	(JM_)	09/03-	8HX (DV4TD)	50	330026	330629, 330718, 330722	330502	330513	
1.6	(JM_)	09/03-	NFU (TU5JP4)	80	330026	330629, 330718, 330722	330552, 330624, 330637	330513	
1.6 HDi	(JM_)	09/05-	9HZ-DV6TED4	80	330026	330629, 330718, 330722	330502	330681	
1.6 VTS	(JM_)	01/05-	NFS (TU5JP4S)	90	330026	330629, 330718, 330722	330552, 330624, 330637	330513	
C3			**02/02 -**						
1.1	II	11/09-	--	44		330722			
1.1 i	(FC_)	02/02-	HFX (TU1JP)	44	330026	330060, 330629, 330704, 330713, 330718	330551, 330624, 330637	330513	
1.4	II	11/09-	KFT (TU3A)	54		330722			
	Pluriel (HB_)	05/03-	KFV (TU3JP)	54	330026	330629, 330718, 330722	330551, 330624, 330637	330513	
1.4 16V	(FC_)	12/03-	KFU (ET3J4)	65	330026	330060, 330430, 330629, 330704, 330713, 330718, 330722	330551, 330552, 330624	330513	

OPS Oil Pressure Switches **BLS** Brake Light Switches **TT-RF** Temperature Transmitter and Radiator Fan Switches **RLS** Reverse Light Switches **VAR** Various

Vehicle		Date	Engine	kW	OPS	BLS	TT-RF	RLS	VAR
1.4 16V HDi	(FC_)	02/02-	8HY (DV4TED4)	66	330026	330060, 330430, 330629, 330704, 330713, 330718, 330722	330502	330681	
1.4 HDi	(FC_)	02/02-	8HX (DV4TD)	50	330026	330060, 330430, 330629, 330704, 330713, 330718, 330722	330502	330513	
	Pluriel (HB_)	04/04-	8HX (DV4TD)	50	330026	330629, 330718, 330722	330502	330513	
1.4 HDi 70	II	11/09-	8HZ (DV4TD)	50		330629, 330722			
1.4 Hybrid	Pluriel (HB_)	05/05-	KFV (TU3JP)	54	330026	330629		330513	
1.4 i	(FC_)	02/02-	KFV (TU3JP)	54	330026	330060, 330430, 330629, 330704, 330713, 330718, 330722	330551, 330624, 330637	330513	
1.4 i Bivalent	(FC_)	02/02-	KFV (TU3JP)	54	330026	330060, 330430, 330629, 330704, 330713, 330718, 330722	330551, 330624, 330637	330513	
1.4 VTi 95	II	11/09-	--	70		330722			
1.6	Pluriel (HB_)	05/03-	NFU (TU5JP4)	80	330026	330629, 330718	330552, 330624, 330637	330513	
1.6 16V	(FC_)	02/02-	NFU (TU5JP4)	80	330026	330060, 330430, 330629, 330704, 330713, 330718, 330722	330551, 330552, 330624, 330637	330513	
1.6 16V HDi	(FC_)	10/05-	9HX (DV6ATED4)	66	330026	330629, 330722	330502	330681	
	(FC_)	09/05-	DV6TED4	80	330026	330629, 330722	330502	330681	
1.6 HDi	II	11/09-	9HP (DV6DTED)	68		330722		330681	
1.6 HDi 110	II	11/09-	9HR (DV6C)	82		330722		330681	
1.6 HDi 90	II	11/09-	DV6ATED4	66		330722		330681	
1.6 VTi 120	II	11/09-	5FS (EP6C)	88		330722			
C3 Picasso			**02/09 -**						
1.4 VTi 95		02/09-	8FS (EP3)	70		330722		330681	
1.6 HDi		02/09-	9HX (DV6ATED4)	66		330722		330681	
		02/09-	9HZ-DV6TED4	80		330722		330681	
1.6 HDI 90		07/10-	9HP (DV6DTED)	68		330722		330681	
1.6 VTi 120		02/09-	5FW (EP6)	88		330722		330681	
C4			**11/04 -**						
1.4 16V	(LC_)	11/04-	KFU (ET3J4)	65	330026	330629, 330722	330552, 330624	330513	
	Coupe (LA_)	11/04-	KFU (ET3J4)	65	330026	330629, 330722	330552, 330624	330513	
1.6 16V	(LC_)	11/04-	NFU (TU5JP4)	80	330026	330629, 330722	330552, 330624, 330637	330513, 330681	
	Coupe (LA_)	11/04-	NFU (TU5JP4)	80	330026	330629, 330722	330552, 330624, 330637	330513, 330681	
	Saloon	07/06-	NFU (TU5JP4)	80		330722	330637	330681	
1.6 16V Bio-Flex	(LC_)	09/07-	NFU (TU5JP4)	80	330026	330629, 330722	330552, 330637	330513, 330681	
1.6 HDi	(LC_)	11/04-	9HX (DV6ATED4)	66	330026	330629, 330722	330502	330681	

OPS Oil Pressure Switches **BLS** Brake Light Switches **TT-RF** Temperature Transmitter and Radiator Fan Switches **RLS** Reverse Light Switches **VAR** Various

ERA S.p.A. Moncalieri (TO) Italy - tel: +39 011 6891511 - fax: +39 011 6472862 - www.eranet.it

Vehicle		Date	Engine	kW	OPS	BLS	TT-RF	RLS	VAR
1.6 HDi	Coupe (LA_)	11/04-	9HX (DV6ATED4)	66	330026	330629, 330722	330502	330681	
	(LC_)	11/04-	DV6TED4	80	330026	330629, 330722	330502	330681	
	Coupe (LA_)	11/04-	DV6TED4	80	330026	330629, 330722	330502	330681	
	Saloon	07/06-	DV6TED4	80		330722		330681	
1.6 THP 140	(LC_)	07/08-	5FT (EP6DT)	103		330722			
1.6 THP 150	(LC_)	07/08-	5FX (EP6DT)	110	330026	330629, 330722	330552	330681	
	Coupe (LA_)	07/08-	5FX (EP6DT)	110		330722		330681	
1.6 VTi 120	(LC_)	07/08-	5FW (EP6)	88	330026	330629, 330722	330552	330681	
	Coupe (LA_)	07/08-	5FW (EP6)	88		330722		330681	
2.0 16V	(LC_)	11/04-	RFN (EW10J4)	100	330026	330629, 330722	330624	330681	
	Coupe (LA_)	11/04-	RFN (EW10J4)	100	330026	330629, 330722	330624	330681	
	(LC_)	11/04-	EW10A	103	330026	330629, 330722	330502	330681	
	Saloon	07/06-	EW10A	103		330722		330681	
	(LC_)	11/04-	EW10J4S	130	330026	330629, 330722		330681	
	Coupe (LA_)	11/04-	EW10J4S	130	330026	330629, 330722		330681	
2.0 HDi	(LC_)	11/04-	DW10BTED4	100	330026	330629, 330722	330502	330513	
	Coupe (LA_)	11/04-	DW10BTED4	100	330026	330629, 330722	330502	330513	
C4 Grand Picasso			**10/06 -**						
1.6 16V	(UA_)	10/08-	5FX (EP6DT)	110		330629, 330722		330681	
1.6 HDi	(UA_)	10/06-	9HZ-DV6TED4	80	330026	330629, 330722	330502	330681	
1.6 VTi 120	(UA_)	07/08-	5FW (EP6)	88	330026	330629, 330722	330552	330681	
1.8 i 16V	(UA_)	10/06-	6FY-EW7A	92	330026	330629, 330722	330502	330681	
2.0 HDi 138	(UA_)	10/06-	RHJ-DW10BTED4	100	330026	330629, 330722	330502	330681	
2.0 HDi 150	(UA_)	07/09-	--	110		330722		330681	
2.0 i 16V	(UA_)	10/06-	RFJ (EW10A)	103	330026	330629, 330722	330502	330681	
C4 Picasso			**02/07 -**						
1.6 16V	(UD_)	07/08-	5FX (EP6DT)	110		330629, 330722		330681	
1.6 HDi	(UD_)	02/07-	9HZ-DV6TED4	80	330026	330629, 330722	330502	330681	
1.6 VTi 120	(UD_)	07/08-	5FW (EP6)	88	330026	330629, 330722	330552	330681	
1.8 i 16V	(UD_)	02/07-	6FY-EW7A	92	330026	330629, 330722	330502	330681	
2.0 HDi 138	(UD_)	02/07-	RHJ-DW10BTED4	100	330026	330629, 330722	330502	330681	
2.0 HDi 150	(UD_)	07/09-	--	110		330722		330681	
2.0 i 16V	(UD_)	02/07-	RFJ (EW10A)	103	330026	330629, 330722	330502, 330624	330681	
C5			**03/01 -**						
1.6 HDi	(RC_)	09/04-	9HY (DV6TED4)	80	330026	330629, 330722	330502	330681	
	(RD_)	02/08-	DV6TED4	80	330026	330629, 330722	330502	330681	
	Break (RE_)	09/04-	9HY (DV6TED4)	80	330026	330629, 330722	330502	330681	
	Break (TD_)	02/08-	DV6TED4	80	330026	330629, 330722	330502	330681	
1.6 HDi 110	(RD_)	07/10-	9HR (DV6C)	82		330722		330681	

OPS Oil Pressure Switches **BLS** Brake Light Switches **TT-RF** Temperature Transmitter and Radiator Fan Switches **RLS** Reverse Light Switches **VAR** Various

Vehicle		Date	Engine	kW	OPS	BLS	TT-RF	RLS	VAR
1.6 HDi 110	Break (TD_)	07/10-	9HR (DV6C)	82		330722		330681	
1.6 THP 155	(RD_)	04/09-	5FV (EP6DT)	115		330722		330681	
	Break (TD_)	04/09-	5FV (EP6DT)	115		330722		330681	
1.8 16V	(DC_)	03/01-08/04	6FZ (EW7J4)	85	330026	330430, 330704, 330713, 330718	330624	330681	
	(RC_)	09/04-	6FZ (EW7J4)	85	330026	330629, 330722	330624	330681	
	Break (DE_)	06/01-08/04	6FZ (EW7J4)	85	330026	330430, 330704, 330713, 330718	330624	330681	
	Break (RE_)	09/04-	6FZ (EW7J4)	85	330026	330629, 330722	330624	330681	
	(RC_)	09/05-	6FY-EW7A	92	330026	330629, 330722	330502	330681	
	(RD_)	02/08-	6FY-EW7A	92	330026	330629, 330722	330502	330681	
	Break (RE_)	09/05-	6FY-EW7A	92	330026	330629, 330722	330502	330681	
	Break (TD_)	02/08-	6FY-EW7A	92	330026	330629, 330722	330502	330681	
2.0 16V	(DC_)	03/01-08/04	RFN (EW10J4)	100	330026	330430, 330704, 330713, 330718	330624	330681	
	Break (DE_)	06/01-08/04	RFN (EW10J4)	100	330026	330430, 330704, 330713, 330718	330624	330681	
	(RC_)	09/04-	EW10A	103	330026	330629, 330722	330502	330681	
	(RD_)	02/08-	EW10A	103	330026	330629, 330722	330502	330681	
	Break (RE_)	09/04-	RFJ (EW10A)	103	330026	330629, 330722	330502	330681	
	Break (TD_)	02/08-	EW10A	103	330026	330629, 330722	330502	330681	
2.0 16V BioFlex	(RD_)	02/08-	RFJ (EW10A)	103		330722		330681	
	Break (TD_)	02/08-	RFJ (EW10A)	103		330722		330681	
2.0 16V HPi	(DC_)	03/01-08/04	RLZ (EW10D)	103	330026	330704, 330713, 330718	330624	330681	
	Break (DE_)	06/01-08/04	RLZ (EW10D)	103	330026	330704, 330713, 330718	330624	330681	
2.0 HDi	(DC_)	03/01-08/04	RHY (DW10TD)	66	330026	330430, 330704, 330713, 330718	330502	330681	
	Break (DE_)	06/01-08/04	RHY (DW10TD)	66	330026	330430, 330704, 330713, 330718	330502	330681	
	(DC_)	03/01-08/04	RHS (DW10ATED)	79	330026	330430, 330704, 330713, 330718	330502	330513	
	Break (DE_)	06/01-08/04	RHS (DW10ATED)	79	330026	330430, 330704, 330713, 330718	330502	330513	
	(DC_)	03/01-08/04	RHZ (DW10ATED)	80	330026	330430, 330704, 330713, 330718	330502	330513	
	Break (DE_)	06/01-08/04	RHZ (DW10ATED)	80	330026	330430, 330704, 330713, 330718	330502	330513	
	(RC_)	09/04-	DW10BTED4	100	330026	330629, 330722	330502	330513	
	(RD_)	02/08-	DW10BTED4	100	330026	330629, 330722	330502	330513	
	Break (RE_)	09/04-	RHR (DW10BTED4)	100	330026	330629, 330722	330502	330513	
	Break (TD_)	02/08-	DW10BTED4	100	330026	330629, 330722	330502	330513	
2.0 HDi 165	(RD_)	04/09-	RHH (DW10CTED4)	120		330722			
	Break (TD_)	04/09-	RHH (DW10CTED4)	120		330722			
2.2 HDi	(DC_)	03/01-08/04	4HX (DW12TED4/FAP)	98	330026	330430, 330704, 330713, 330718	330502	330513	

OPS Oil Pressure Switches **BLS** Brake Light Switches **TT-RF** Temperature Transmitter and Radiator Fan Switches **RLS** Reverse Light Switches **VAR** Various

ERA S.p.A. Moncalieri (TO) Italy - tel: +39 011 6891511 - fax: +39 011 6472862 - www.eranet.it

Vehicle		Date	Engine	kW	OPS	BLS	TT-RF	RLS	VAR
2.2 HDi	(RC_)	09/04-	4HX (DW12TED4/FAP)	98	330026	330629	330502		
	Break (DE_)	06/01-08/04	4H (DW12TED4/FAP)	98	330026	330430, 330704, 330713, 330718	330502	330513	
	Break (RE_)	09/04-	4HX (DW12TED4/FAP)	98	330026	330629	330502		
	(RD_)	02/08-	4HT (DW12BTED4)	125	330026	330629, 330722	330502	330513	
	Break (TD_)	02/08-	4HT (DW12BTED4)	125	330026	330629, 330722	330502	330513	
2.7 HDi	(RD_)	02/08-	DT17ED4	150		330629			
	Break (TD_)	02/08-	DT17ED4	150		330629			
3.0	(RD_)	02/08-	XFV (ES9A)	152	330026	330629			
	Break (TD_)	02/08-	--	152	330026	330629			
3.0 V6	(DC_)	03/01-08/04	XFX (ES9J4S)	152	330026	330430, 330704, 330713, 330718	330624	330513, 330681	
	(RC_)	09/04-	XFV (ES9A), XFX (ES9J4S)	152	330026	330629			
	Break (DE_)	06/01-08/04	XFX (ES9J4S)	152	330026	330430, 330704, 330713, 330718	330624	330513, 330681	
	Break (RE_)	09/04-	XFV (ES9A)	152	330026	330629			
	(RD_)	02/08-	XFU (ES9A)	155	330026	330629			
	Break (TD_)	02/08-	XFU (ES9A)	155	330026	330629			
C6			**09/05 -**						
2.2 HDi	(TD_)	06/06-	4HT (DW12BTED4)	125	330026	330629, 330722	330502	330513	
2.7 HDi	(TD_)	09/05-	DT17ED4	150		330629			
3.0 V6	(TD_)	09/05-	ES9J4S	155	330026	330629	330624		
C8			**07/02 -**						
2.0	(EA_, EB_)	07/02-	RFN (EW10J4)	100	330026	330629, 330704, 330713, 330715	330624	330681	
2.0 16V	(EA_, EB_)	09/05-	RFJ (EW10A)	103	330026	330629, 330704, 330713, 330715		330681	
2.0 HDi	(EA_, EB_)	07/02-	RHW (DW10ATED4)	79	330026	330629, 330704, 330713, 330715	330502, 330551	330513	
	(EA_, EB_)	02/07-	RHK (DW10UTED4)	88	330026	330629, 330704, 330713, 330715	330502	330513	
2.0 HDi 135	(EA_, EB_)	03/06-	RHR (DW10BTED4)	100	330026	330629, 330704, 330713, 330715	330502	330513	
2.2	(EA_, EB_)	07/02-	3FZ (EW12J4)	116	330026	330629, 330704, 330713, 330715	330624	330513	
2.2 HDi	(EA_, EB_)	07/02-	4HW (DW12TED4)	94	330026	330629, 330704, 330713, 330715	330502	330513	
	(EA_, EB_)	06/06-	4HT (DW12BTED4)	125	330026	330629, 330715	330502	330513	
3.0 V6	(EA_, EB_)	07/02-	XFX (ES9J4S)	150	330026	330629, 330704, 330713			
CX			**09/74 - 08/85**						
2000	I (MA)	06/79-08/85	829 A5	78	330003	330686	330171	330689	
	I Break (MA)	06/79-08/85	829 A5	78	330003	330686	330171	330689	
2500 D	I (MA)	02/78-06/82	M25-629	55	330345	330686	330172	330689	

OPS Oil Pressure Switches **BLS** Brake Light Switches **TT-RF** Temperature Transmitter and Radiator Fan Switches **RLS** Reverse Light Switches **VAR** Various

Vehicle		Date	Engine	kW	OPS	BLS	TT-RF	RLS	VAR
2500 D	I Break (MA)	02/78-08/85	M25-629	55	330345	330686	330172	330689	
DS3			**04/10 -**						
1.4 VTi 95		04/10-	8FP (EP3)	70		330722			
1.6 HDi 110		11/09-	9HR (DV6C)	82		330722		330681	
1.6 HDi 90		11/09-	9HP (DV6DTED)	68		330722		330681	
1.6 THP 150		04/10-	5FR (EP6DT)	115		330722		330681	
1.6 VTi 120		04/10-	5FS (EP6C)	88		330722			
DYANE			**08/67 - 10/84**						
4		04/68-07/75	A79/1 (AYA2)	17		330686			
EVASION			**06/94 - 07/02**						
1.8	(22, U6)	05/97-07/02	LFZ (XU7JP)	73	330023, 330026	330060	330109, 330122, 330147, 330188, 330588	330251, 330681	
1.9 TD	(22, U6)	11/94-07/02	D8B (XUD9TF), DHX (XUD9TF/BTF)	66	330023, 330026	330060, 330074	330109, 330134, 330147, 330272, 330575, 330588	330249, 330513	
	(22, U6)	10/95-12/98	D8B (XUD9TF)	68	330023, 330026	330060, 330074	330109, 330134, 330147, 330272, 330575, 330588, 330645	330249, 330513	
2.0	(22, U6)	06/94-07/02	RFU (XU10J2/C)	89	330023, 330026	330060	330109, 330122, 330147, 330188, 330576, 330588	330251, 330681	
2.0 16V	(22, U6)	05/98-04/00	RFV (XU10J4R)	97	330026	330060, 330074	330109, 330122, 330188, 330588	330249, 330513	
	(22, U6)	05/00-07/02	RFN (EW10J4)	100	330026	330060		330681	
2.0 HDI	(22, U6)	08/99-07/02	RHZ (DW10ATED)	80	330026	330060, 330715	330624	330249, 330513	
2.0 HDI 16V	(22, U6)	09/99-07/02	RHW (DW10ATED4)	80		330715			
2.0 TD	(22, U6)	05/97-07/02	--	68		330060			
2.0 Turbo C.T.	(22, U6)	06/94-07/02	RGX (XU10J2TE)	108	330023, 330026	330060, 330074	330271, 330588	330249, 330513	
2.1 TD	(22, U6)	05/96-07/02	P8C (XUD11BTE)	80	330023	330060, 330074	330109, 330134, 330147, 330272, 330588	330249, 330513	
GS			**09/70 - 07/86**						
A 1.3		09/79-07/86	G13/625, G13/646	48		330686			
	Break	09/79-07/86	G13/625, G13/646	48		330686			
JUMPER			**02/94 -**						
1.9 D	Box (230L)	02/94-04/02	D9B (XUD9A/U)	51	330023, 330026	330048, 330050, 330051, 330064	330109, 330134, 330279, 330554, 330639	330249, 330518	
	Bus (230P)	01/99-04/02	D9B (XUD9A/U)	51	330023, 330026	330048, 330050, 330051, 330064	330109, 330134, 330279, 330554, 330639	330249, 330518	
1.9 TD	Box (230L)	03/94-04/02	DHX (XUD9TF/BTF)	66	330023, 330026	330048, 330050, 330051, 330064	330109, 330279, 330554, 330575	330249, 330518	

OPS Oil Pressure Switches **BLS** Brake Light Switches **TT-RF** Temperature Transmitter and Radiator Fan Switches **RLS** Reverse Light Switches **VAR** Various

ERA S.p.A. Moncalieri (TO) Italy - tel: +39 011 6891511 - fax: +39 011 6472862 - www.eranet.it

Vehicle		Date	Engine	kW	OPS	BLS	TT-RF	RLS	VAR
1.9 TD	Bus (230P)	08/94-04/02	D8C (XUD9UTF)	66	330023, 330026	330048, 330050, 330051, 330064	330109, 330279, 330554, 330575	330249, 330518	
	Flatbed / Chassis (230)	03/94-04/02	DHX (XUD9TF/BTF)	66	330023, 330026	330048, 330050, 330051, 330064	330109, 330279, 330554, 330575	330249, 330518	
	Box (230L)	03/94-04/02	D8C (XUD9UTF)	68	330023, 330026	330048, 330050, 330051, 330064	330109, 330279, 330554, 330575	330249, 330518	
	Bus (230P)	02/94-04/02	D8C (XUD9UTF)	68	330023, 330026	330048, 330050, 330051, 330064	330109, 330279, 330554, 330575	330249, 330518	
	Flatbed / Chassis (230)	03/94-04/02	D8C (XUD9UTF)	68	330023, 330026	330048, 330050, 330051, 330064	330109, 330279, 330554, 330575	330249, 330518	
1.9 TD 4x4	Bus (230P)	08/96-04/02	D8C (XUD9UTF)	68	330023, 330026	330048, 330050, 330051, 330064	330109, 330279, 330554, 330575	330249, 330518	
2.0	Box (230L)	03/94-04/02	RFW (XU10J2U)	80	330023, 330026	330048, 330050, 330051, 330064	330122, 330147, 330197, 330295, 330588	330249, 330513, 330518	
	Bus (230P)	02/94-04/02	RFW (XU10J2U)	80	330023, 330026	330048, 330050, 330051, 330064	330122, 330147, 330197, 330295, 330588	330249, 330513, 330518	
	Flatbed / Chassis (230)	03/94-04/02	RFW (XU10J2U)	80	330023, 330026	330048, 330050, 330051, 330064	330122, 330147, 330197, 330295, 330588	330249, 330513, 330518	
	Box (244)	04/02-	XU10J2	81	330026	330081, 330517	330551	330513, 330518	
	Bus (244, Z_)	04/02-	XU10J2	81	330026	330081, 330517	330551	330513, 330518	
2.0 4x4	Bus (230P)	08/96-04/02	RFW (XU10J2U)	80	330023, 330026	330048, 330050, 330051, 330064	330122, 330147, 330197, 330295, 330588	330249, 330513, 330518	
2.0 bivalent	Box (244)	02/03-	XU10J2	81	330026	330081, 330517	330551	330513, 330518	
	Bus (244, Z_)	02/03-	XU10J2	81	330026	330081, 330517	330551	330513, 330518	
2.0 HDI	Box (230L)	11/01-04/02	DW10UTD	62			330742		
2.0 HDi	Box (244)	04/02-	DW10UTD	62	330026	330081, 330517	330742	330513, 330518	
	Bus (244, Z_)	04/02-	DW10UTD	62	330026	330081, 330517	330742	330513, 330518	
	Flatbed / Chassis (244)	04/02-	DW10UTD	62	330026	330081, 330517	330742	330513, 330518	
2.2 HDi	Box (244)	04/02-	DW12TED	74	330026	330081, 330517	330279, 330295, 330742	330513, 330518	
	Bus (244, Z_)	04/02-	DW12TED	74	330026	330081, 330517	330279, 330295, 330742	330513, 330518	
	Flatbed / Chassis (244)	02/02-06/06	4HY (DW12UTED)	74		330517	330742		
2.2 HDi 100	Box	04/06-	4HV	74	330028	330081, 330517		330513	
	Bus	04/06-	4HV	74	330028	330081, 330517		330513	
	Flatbed / Chassis	04/06-	4HV	74	330028	330081, 330517		330513	
2.2 HDi 120	Box	04/06-	4HU	88	330028	330081, 330517		330513	
	Bus	04/06-	4HU	88	330028	330081, 330517		330513	
	Flatbed / Chassis	04/06-	4HU	88	330028	330081, 330517		330513	
2.2 HDi 16V	Flatbed / Chassis (244)	04/02-	DW12TED	74	330026	330081, 330517	330279, 330295, 330742	330513, 330518	
2.5 D	Box (230L)	03/94-04/02	T9A (DJ5)	63	330023, 330026	330048, 330050, 330051, 330064	330134, 330147, 330279, 330556, 330575	330249, 330513, 330518	
	Bus (230P)	08/94-04/02	T9A (DJ5)	63	330023, 330026	330048, 330050, 330051, 330064	330134, 330147, 330279, 330556, 330575	330249, 330513, 330518	

OPS Oil Pressure Switches **BLS** Brake Light Switches **TT-RF** Temperature Transmitter and Radiator Fan Switches **RLS** Reverse Light Switches **VAR** Various

Vehicle		Date	Engine	kW	OPS	BLS	TT-RF	RLS	VAR
2.5 D	Flatbed / Chassis (230)	03/94-04/02	T9A (DJ5)	63	330023, 330026	330048, 330050, 330051, 330064	330134, 330147, 330279, 330556, 330575	330249, 330513, 330518	
2.5 D 4x4	Box (230L)	03/00-04/02	T9A (DJ5)	63	330023, 330026	330048, 330050, 330051, 330064	330134, 330147, 330279, 330556, 330575	330249, 330513, 330518	
2.5 D 4x4	Bus (230P)	08/96-04/02	T9A (DJ5)	63	330023, 330026	330048, 330050, 330051, 330064	330134, 330147, 330279, 330556, 330575	330249, 330513, 330518	
2.5 D 4X4	Flatbed / Chassis (230)	03/00-04/02	T9A (DJ5)	63	330023, 330026	330048, 330050, 330051, 330064	330134, 330147, 330279, 330556, 330575	330249, 330513, 330518	
2.5 TD	Box (230L)	03/94-04/02	T8A (DJ5T)	76	330023, 330026	330048, 330050, 330051, 330064	330134, 330147, 330279, 330556, 330575	330249, 330513, 330518	
	Bus (230P)	08/94-04/02	T8A (DJ5T)	76	330023, 330026	330048, 330050, 330051, 330064	330134, 330147, 330279, 330556, 330575	330249, 330513, 330518	
	Flatbed / Chassis (230)	03/94-04/02	T8A (DJ5T)	76	330023, 330026	330048, 330050, 330051, 330064	330134, 330147, 330279, 330556, 330575	330249, 330513, 330518	
2.5 TD 4x4	Bus (230P)	08/96-04/02	T8A (DJ5T)	76	330023, 330026	330048, 330050, 330051, 330064	330134, 330147, 330279, 330556, 330575	330249, 330513, 330518	
2.5 TDi	Box (230L)	12/96-11/00	THX (DJ5TED)	79	330023, 330026	330048, 330050, 330051, 330064	330147, 330279, 330556	330249, 330513, 330518	
	Bus (230P)	12/96-11/00	THX (DJ5TED)	79	330023, 330026	330048, 330050, 330051, 330064	330147, 330279, 330556	330249, 330513, 330518	
	Flatbed / Chassis (230)	12/96-04/02	THX (DJ5TED)	79	330023, 330026	330048, 330050, 330051, 330064	330147, 330279, 330556	330249, 330513, 330518	
2.5 TDi 4x4	Box (230L)	03/00-11/00	THX (DJ5TED)	79	330023, 330026	330048, 330050, 330051, 330064	330147, 330279, 330556	330249, 330513, 330518	
2.5 TDI 4x4	Bus (230P)	12/96-11/00	THX (DJ5TED)	79	330023, 330026	330048, 330050, 330051, 330064	330147, 330279, 330556	330249, 330513, 330518	
2.5 TDi 4X4	Flatbed / Chassis (230)	03/00-04/02	THX (DJ5TED)	79	330023, 330026	330048, 330050, 330051, 330064	330147, 330279, 330556	330249, 330513, 330518	
2.8 HDi	Box (230L)	09/00-04/02	8140.43S	94		330519	330137, 330148, 330279, 330295	330513	
	Box (244)	04/02-	8140.43S	94		330081, 330517	330137, 330148, 330295	330513, 330518	
	Bus (230P)	09/00-04/02	8140.43S	94		330519	330137, 330148, 330279, 330295	330513	
	Bus (244, Z_)	04/02-	8140.43S	94		330081, 330517	330137, 330148, 330295	330513, 330518	
	Flatbed / Chassis (230)	09/00-04/02	8140.43S	94		330519	330137, 330148, 330279, 330295	330513	
	Flatbed / Chassis (244)	04/02-	8140.43S	94		330081, 330517	330137, 330148, 330295	330513, 330518	
	Box (244)	05/04-	8140.43N	107		330081, 330517	330137, 330148	330513, 330518	
	Flatbed / Chassis (244)	05/04-	8140.43N	107		330081, 330517	330137, 330148	330513, 330518	
2.8 HDi 4x4	Box (230L)	09/00-04/02	8140.43S	94		330519	330137, 330148, 330279, 330295	330513	
	Box (244)	04/02-	8140.43S	94		330081, 330517	330137, 330148, 330295	330513, 330518	
	Bus (230P)	09/00-04/02	8140.43S	94		330519	330137, 330148, 330279, 330295	330513	

OPS Oil Pressure Switches **BLS** Brake Light Switches **TT-RF** Temperature Transmitter and Radiator Fan Switches **RLS** Reverse Light Switches **VAR** Various

ERA S.p.A. Moncalieri (TO) Italy - tel: +39 011 6891511 - fax: +39 011 6472862 - www.eranet.it

Vehicle		Date	Engine	kW	OPS	BLS	TT-RF	RLS	VAR
2.8 HDi 4x4	Flatbed / Chassis (244)	02/02-06/06	F28TDCR	94		330517			
3.0 HDi 145	Box	07/10-	F1CE3481N	107		330517			
	Flatbed / Chassis	07/10-	F1CE3481N	107		330517			
3.0 HDi 155	Box	07/10-	F1CE0481D (F30DT)	115		330517			
3.0 HDi 160	Box	09/06-	F1CE0481D (F30DT)	116		330081, 330517	330137		
	Bus	09/06-	F1CE0481D (F30DT)	116		330081, 330517	330137		
	Flatbed / Chassis	09/06-	F1CE0481D (F30DT)	116		330081, 330517	330137		
JUMPY			**06/94 -**						
1.6	(U6U)	10/95-	1580 SPI, 220 A2.000	58		330060	330116, 330188	330251, 330681	
	(U6U)	10/95-08/00	220 A2.000	59				330681	
	Box (BS_, BT_, BY_, BZ_)	10/95-08/00	220 A2.000	59				330681	
1.6 HDi 90		01/07-	9HU (DV6UTED4)	66	330026	330629, 330715	330502	330681	
	Box	01/07-	9HU (DV6UTED4)	66		330715		330681	
1.6 i	Box (BS_, BT_, BY_, BZ_)	10/95-	1580 SPI, 220 A2.000	58			330116, 330188	330251, 330681	
1.9 D	(U6U)	10/95-04/98	D9B (XUD9A/U)	51	330023, 330026	330060	330109, 330134, 330272, 330588	330251, 330681	
1.9 D 70	(U6U)	04/98-	WJZ (DW8)	51	330026	330060	330155, 330272	330251, 330681	
	Box (BS_, BT_, BY_, BZ_)	04/98-	WJZ (DW8)	51	330026		330155, 330272	330251, 330681	
1.9 TD	(U6U)	10/95-	DHX (XUD9TF/BTF)	66	330023, 330026	330060	330109, 330134, 330272, 330575, 330588	330249, 330513	
	Box (BS_, BT_, BY_, BZ_)	10/95-	DHX (XUD9TF/BTF)	66	330023, 330026		330109, 330134, 330272, 330575, 330588	330249, 330513	
	(U6U)	04/96-	D8B (XUD9TF)	68	330023, 330026	330060	330109, 330134, 330272, 330575, 330588	330249, 330513	
	Flatbed / Chassis (BU_, BV_, BW_, BX_)	10/99-	D8B (XUD9TF)	68	330023, 330026		330109, 330134, 330272, 330575, 330588	330249, 330513	
2.0	(U6U)	04/00-12/06	RFN (EW10J4)	100	330026	330060, 330074	330624	330681	
	Flatbed / Chassis (BU_, BV_, BW_, BX_)	12/03-10/06	RFN (EW10J4)	100				330681	
2.0 HDi 110	(U6U)	03/00-	RHZ (DW10ATED)	80	330026	330074, 330715	330551, 330624	330513	
	Box (BS_, BT_, BY_, BZ_)	01/02-	RHZ (DW10ATED)	80	330026	330074, 330715	330551, 330624	330513	
2.0 HDi 110 16V	Flatbed / Chassis (BU_, BV_, BW_, BX_)	12/03-10/06	RHZ (DW10ATED)	80			330624		
2.0 HDi 120		01/07-	RHK (DW10UTED4)	88	330026	330629, 330715	330502	330513	
	Box	01/07-	RHK (DW10UTED4)	88	330026	330629, 330715	330502	330513	
2.0 HDi 140		01/07-	RHR (DW10BTED4)	100	330026	330629, 330715	330502	330513	
	Box	01/07-	RHR (DW10BTED4)	100	330026	330629, 330715	330502	330513	
2.0 HDi 165		07/10-	RHH (DW10CTED4)	120		330715			
	Box	07/10-	RHH (DW10CTED4)	120		330715			
2.0 HDi 95	(U6U)	10/99-	RHX	69	330026	330074, 330704, 330713, 330715	330551, 330624	330513	

OPS Oil Pressure Switches **BLS** Brake Light Switches **TT-RF** Temperature Transmitter and Radiator Fan Switches **RLS** Reverse Light Switches **VAR** Various

Vehicle		Date	Engine	kW	OPS	BLS	TT-RF	RLS	VAR
2.0 HDi 95	Box (BS_, BT_, BY_, BZ_)	10/99-	RHX (DW10BTED)	69	330026	330074, 330704, 330713, 330715	330551, 330624	330513	
	Flatbed / Chassis (BU_, BV_, BW_, BX_)	10/99-	RHX	69	330026	330074, 330704, 330713, 330715	330551, 330624	330513	
2.0 i		01/07-	RFH (EW10A)	103	330026	330629, 330715	330624	330681	
	Box	01/07-	RFH (EW10A)	103	330026	330629, 330715	330624	330681	
2.0 i 16V	(U6U)	03/00-	--	102	330026	330074		330681	
	Box (BS_, BT_, BY_, BZ_)	03/00-	--	102	330026	330074		330681	
MEHARI			**05/68 - 10/87**						
0.6		05/68-10/79	M28/1 (AK2)	19		330686		330689	
NEMO			**02/08 -**						
1.4	Box (AA_)	02/08-	KFV (TU3A)	54	330026	330492, 330721, 330736	330624	330513	
	Estate	04/09-	KFV (TU3A)	54		330721, 330736			
1.4 HDi	Box (AA_)	02/08-	8HS (DV4TD)	50	330026	330492, 330721, 330736	330502	330513	
	Estate	04/09-	8HS (DV4TD)	50		330721, 330736			
SAXO			**02/96 - 04/04**						
1.0 X	(S0, S1)	05/96-11/98	CDZ (TU9M)	33	330010	330036, 330704	330188, 330588, 330637	330249, 330513	
	(S0, S1)	05/98-06/03	CDZ (TU9M)	37	330010	330036, 330704	330188, 330588, 330637	330249, 330513	
1.1 X,SX	(S0, S1)	05/96-09/03	HDZ (TU1M)	40	330010	330036, 330704	330122, 330188, 330588, 330637	330249, 330513	
	(S0, S1)	05/96-09/03	HDZ (TU1M), HFX (TU1JP)	44	330010, 330026	330036, 330704	330122, 330188, 330551, 330588, 330637	330249, 330513	
1.4 VTS	(S0, S1)	05/96-06/03	KFW (TU3JP), KFX (TU3JP)	55	330010, 330026	330036, 330704	330122, 330188, 330551, 330588, 330637	330249, 330513	
1.5 D	(S0, S1)	09/96-09/03	VJY (TUD5)	40	330023, 330026	330036, 330704	330134, 330154, 330188, 330271, 330588, 330637	330249, 330513	
	(S0, S1)	09/96-06/01	VJZ (TUD5)	42	330023, 330026	330036, 330704	330134, 330154, 330188, 330271, 330588, 330637	330249, 330513	
1.6	(S0, S1)	02/96-06/03	NFZ (TU5JP)	66	330010	330036, 330704	330122, 330188, 330588, 330637	330249, 330513	
	(S0, S1)	02/01-04/04	NFT	74	330026	330036, 330704	330122, 330551, 330637	330249, 330513	
	(S0, S1)	02/96-04/04	NFX (TU5JP4)	88	330010	330036, 330704	330271, 330551, 330576	330249, 330513	
1.6 VTL,VTR	(S0, S1)	05/96-06/03	NFZ (TU5JP)	65	330010	330036, 330704	330122, 330188, 330588, 330637	330249, 330513	
1.6 VTS	(S0, S1)	09/00-09/03	NFT	72	330026	330036, 330704	330122, 330551, 330637	330249, 330513	
	(S0, S1)	06/96-09/03	NFX (TU5JP4)	87	330010	330036, 330704	330271, 330551, 330576	330249, 330513	
VISA			**09/78 - 03/91**						
11 E		09/78-06/88	109K	35			330171	330236	

OPS Oil Pressure Switches **BLS** Brake Light Switches **TT-RF** Temperature Transmitter and Radiator Fan Switches **RLS** Reverse Light Switches **VAR** Various

ERA S.p.A. Moncalieri (TO) Italy - tel: +39 011 6891511 - fax: +39 011 6472862 - www.eranet.it

Vehicle		Date	Engine	kW	OPS	BLS	TT-RF	RLS	VAR
XANTIA		**03/93 - 04/03**							
1.6 i	(X1)	03/93-01/98	BFZ (XU5JP)	65	330023		330109, 330122, 330147, 330188, 330588	330251	
1.8 i	(X1)	04/97-01/98	LFX (XU7JB)	66	330023		330109, 330122, 330147, 330188, 330588	330251	
	(X2)	01/98-04/03	LFX (XU7JB)	66	330023, 330026		330109, 330122, 330147, 330188, 330588	330251, 330681	
	Break (X1)	04/97-01/98	LFX (XU7JB)	66	330023		330109, 330122, 330147, 330188, 330588	330251	
	Break (X2)	01/98-04/03	LFX (XU7JB)	66	330023, 330026		330109, 330122, 330147, 330188, 330588	330251, 330681	
	(X1)	03/93-01/98	LFZ (XU7JP)	74	330023		330109, 330122, 330147, 330188, 330215, 330588	330251	
	Break (X1)	06/95-01/98	LFZ (XU7JP)	74	330023		330109, 330122, 330147, 330188, 330215, 330588	330251	
1.8 i 16V	(X1)	06/95-01/98	LFY (XU7JP4)	81	330023		330109, 330122, 330147, 330194, 330588	330251	
	(X2)	01/98-04/03	LFY (XU7JP4)	81	330023, 330026		330122, 330147, 330194, 330588	330251, 330681	
	Break (X1)	06/95-01/98	LFY (XU7JP4)	81	330023		330109, 330122, 330147, 330194, 330588	330251	
	Break (X2)	01/98-04/03	LFY (XU7JP4)	81	330023, 330026		330122, 330147, 330194, 330588	330251, 330681	
1.9 D	(X1)	06/94-01/98	D9B (XUD9A/L)	51	330023		330109, 330134, 330147, 330272, 330588, 330639	330251	
1.9 SD	(X1)	02/96-01/98	DHW (XUD9SD)	55	330023		330109, 330147, 330188, 330575, 330576, 330588	330251	
	(X2)	01/98-04/03	DHW (XUD9SD)	55	330023, 330026		330109, 330134, 330147, 330194, 330576, 330588	330251, 330681	
	Break (X1)	04/97-01/98	DHW (XUD9SD)	55	330023		330109, 330147, 330188, 330575, 330576, 330588	330251	
	Break (X2)	01/98-04/03	DHW (XUD9SD)	55	330023, 330026		330109, 330134, 330147, 330194, 330576, 330588	330251, 330681	
1.9 Turbo D	(X1)	10/94-01/98	DHX (XUD9TF/BTF), DHY (XUD9TE/Y)	66	330023		330109, 330134, 330147, 330272, 330556, 330575, 330576, 330588	330251	
	(X2)	01/98-04/03	DHX (XUD9TF/BTF), DHY (XUD9TE/Y)	66	330023, 330026		330109, 330134, 330147, 330556, 330576, 330588	330251, 330681	
	Break (X1)	06/95-01/98	D8B (XUD9TF), DHX (XUD9TF/BTF), DHY (XUD9TE/Y)	66	330023		330109, 330134, 330147, 330272, 330556, 330575, 330576, 330588	330251	

OPS Oil Pressure Switches **BLS** Brake Light Switches **TT-RF** Temperature Transmitter and Radiator Fan Switches **RLS** Reverse Light Switches **VAR** Various

Vehicle		Date	Engine	kW	OPS	BLS	TT-RF	RLS	VAR
1.9 Turbo D	Break (X2)	01/98-04/03	D8B (XUD9TF), DHX (XUD9TF/BTF)	66	330023, 330026		330109, 330134, 330147, 330556, 330576, 330588	330251, 330681	
2.0 HDI 109	(X2)	02/99-04/03	RHZ (DW10ATED)	80	330026	330430	330551	330249, 330513	
	Break (X2)	02/99-04/03	RHZ (DW10ATED)	80	330026	330430	330551	330249, 330513	
2.0 HDI 90	(X2)	03/99-04/03	RHY (DW10TD)	66	330026	330430	330551	330251, 330681	
	Break (X2)	03/99-04/03	RHY (DW10TD)	66	330026	330430	330551	330251, 330681	
2.0 i	(X1)	03/93-01/98	RFX (XU10J2C)	89	330023		330109, 330122, 330147, 330188, 330576, 330588	330251	
	(X2)	01/98-04/03	RFX (XU10J2C)	89	330023		330109, 330122, 330576, 330588		
	Break (X1)	06/95-01/98	RFX (XU10J2C)	89	330023		330109, 330122, 330147, 330188, 330576, 330588	330251	
	Break (X2)	01/98-04/03	RFX (XU10J2C)	89	330023		330109, 330122, 330576, 330588		
2.0 i 16V	(X1)	06/95-01/98	RFV (XU10J4R)	97	330023		330109, 330122, 330147, 330194, 330576, 330588	330251	
	(X2)	01/98-04/03	RFV (XU10J4R)	97	330023, 330026		330109, 330122, 330147, 330194, 330576, 330588	330251, 330681	
	Break (X1)	06/95-01/98	RFV (XU10J4R)	97	330023		330109, 330122, 330147, 330194, 330576, 330588	330251	
	Break (X2)	01/98-04/03	RFV (XU10J4R)	97	330023, 330026		330109, 330122, 330147, 330194, 330576, 330588	330251, 330681	
	(X1)	06/94-01/98	RFT (XU10J4/Z)	110	330023		330109, 330122, 330147, 330576, 330588	330251	
	(X1)	03/93-01/98	RFY (XU10J4/Z)	112	330023		330109, 330122, 330147, 330576, 330588	330251	
2.0 Turbo	(X1)	06/95-01/98	RGX (XU10J2TE)	108	330023		330576, 330588	330249	
	(X2)	01/98-04/03	RGX (XU10J2TE)	108	330023, 330026		330576, 330588	330249, 330513	
	Break (X1)	06/95-01/98	RGX (XU10J2TE)	108	330023		330576, 330588	330249	
	Break (X2)	01/98-04/03	RGX (XU10J2TE)	108	330023, 330026		330576, 330588	330249, 330513	
2.1 Turbo D 12V	(X1)	06/95-01/98	P8C (XUD11BTE)	80	330023		330109, 330134, 330147, 330576, 330588	330249	
	(X2)	01/98-02/99	P8C (XUD11BTE)	80	330023		330134, 330147, 330576, 330588	330249, 330513	
	Break (X1)	06/96-01/98	P8C (XUD11BTE)	80	330023		330109, 330134, 330147, 330576, 330588	330249	
	Break (X2)	01/98-02/99	P8C (XUD11BTE)	80	330023		330134, 330147, 330576, 330588	330249, 330513	
3.0 i 24V	(X1)	01/97-01/98	XFZ (ES9J4)	140	330023		330657	330249	
3.0 V6	(X2)	01/98-04/03	XFZ (ES9J4)	140	330023, 330026		330588, 330657	330249, 330513	
	Break (X2)	01/98-04/03	XFZ (ES9J4)	140	330023, 330026		330588, 330657	330249, 330513	

OPS Oil Pressure Switches **BLS** Brake Light Switches **TT-RF** Temperature Transmitter and Radiator Fan Switches **RLS** Reverse Light Switches **VAR** Various

ERA S.p.A. Moncalieri (TO) Italy - tel: +39 011 6891511 - fax: +39 011 6472862 - www.eranet.it

Vehicle		Date	Engine	kW	OPS	BLS	TT-RF	RLS	VAR
XM			**05/89 - 10/00**						
2.0	(Y3)	05/89-04/94	--	84	330023		330109, 330147, 330160, 330180, 330588	330251	
2.0 i	(Y3)	05/89-04/94	RDZ (XU10MZ)	79	330023		330110, 330147, 330180	330251	
	Break (Y3)	11/91-04/94	RDZ (XU10MZ), XU102C	79	330023		330110, 330147, 330180	330251	
	(Y3)	05/89-06/94	RFZ (XU10J2)	89	330023		330109, 330110, 330116, 330122, 330147, 330180, 330588	330251	
	Break (Y3)	11/91-04/94	RFZ (XU10J2)	89	330023		330109, 330110, 330116, 330122, 330147, 330180, 330588	330251	
2.0 i 16V	(Y4)	05/94-10/00	RFV (XU10J4R)	97	330023, 330026		330109, 330122, 330147, 330588	330249, 330251, 330513	
	Break (Y4)	05/94-10/00	RFV (XU10J4R)	97	330023, 330026		330109, 330122, 330147, 330588	330249, 330251, 330513	
2.0 i Turbo	(Y3)	09/92-06/94	RGY (XU10J2TE/Z)	104	330023		330272, 330588	330249	
2.0 Turbo	Break (Y3)	09/92-04/94	RGY (XU10J2TE/Z)	104	330023		330272, 330588	330249	
	(Y4)	05/94-10/00	RGX (XU10J2TE)	108	330023, 330026		330588	330249, 330513	
	Break (Y4)	05/94-10/00	RGX (XU10J2TE), RGY (XU10J2TE/Z)	108	330023, 330026		330588	330249, 330513	
2.1 D 12V	(Y3)	05/89-06/94	P9A (XUD11A)	60	330010, 330023		330109, 330147, 330180, 330588	330251	
	Break (Y3)	11/91-04/94	P9A (XUD11A)	60	330010, 330023		330109, 330147, 330180, 330588	330251	
2.1 D12	Break (Y4)	07/94-06/96	P9A (XUD11A)	60	330023		330109, 330134, 330588	330251	
2.1 TD 12V	(Y3)	05/89-06/94	P8A (XUD11ATE), PHZ (XUD11ATE), PJZ (XUD11ATE)	80	330010		330109, 330147, 330272, 330588	330249	
	(Y4)	05/94-10/00	P8A (XUD11ATE), P8C (XUD11BTE), PHZ (XUD11ATE), PJZ (XUD11ATE)	80	330023		330109, 330134, 330588	330249, 330513	
	Break (Y3)	11/91-04/94	P8A (XUD11ATE), P8C (XUD11BTE), PHZ (XUD11ATE), PJZ (XUD11ATE)	80	330010		330109, 330147, 330272, 330588	330249	
	Break (Y4)	05/94-10/00	P8C (XUD11BTE), PHZ (XUD11ATE), PJZ (XUD11ATE)	80	330023		330109, 330134, 330588	330249, 330513	
2.5 TD	(Y4)	05/94-10/00	THY (DK5ATE)	95	330023, 330026	330430	330109, 330122, 330588	330249, 330513	
	Break (Y4)	05/94-10/00	THY (DK5ATE)	95	330023, 330026	330430	330109, 330122, 330588	330249, 330513	
3.0 V6	(Y3)	05/89-06/94	SFZ (ZPJ/Z), UFZ (ZPJ/Z)	123	330023		330109, 330110, 330147, 330215, 330588	330249	
	(Y4)	05/94-10/00	SFZ (ZPJ/Z), UFZ (ZPJ/Z)	123	330023	330430	330109, 330110, 330147, 330588	330249, 330513	
	Break (Y3)	11/91-04/94	SFZ (ZPJ/Z), UFZ (ZPJ/Z)	123	330023		330109, 330110, 330147, 330215, 330588	330249	

OPS Oil Pressure Switches **BLS** Brake Light Switches **TT-RF** Temperature Transmitter and Radiator Fan Switches **RLS** Reverse Light Switches **VAR** Various

Vehicle		Date	Engine	kW	OPS	BLS	TT-RF	RLS	VAR
3.0 V6	Break (Y4)	05/94-10/00	SFZ (ZPJ/Z), UFZ (ZPJ/Z)	123	330023	330430	330109, 330110, 330147, 330588	330249, 330513	
	(Y4)	04/97-10/00	XFZ (ES9J4)	140	330023, 330026		330588, 330657	330249, 330513	
	Break (Y4)	04/97-10/00	XFZ (ES9J4)	140	330023, 330026		330588, 330657	330249, 330513	
3.0 V6 24V	(Y3)	07/90-06/94	SKZ (ZPJ4/Z), UKZ (ZPJ4/Z)	147	330023		330109, 330110, 330147, 330215, 330588	330249	
	(Y4)	05/94-10/00	SKZ (ZPJ4/Z), UKZ (ZPJ4/Z)	147	330023	330430	330109, 330110, 330147, 330588	330249, 330513	
XSARA		**04/97 - 08/05**							
1.4 HDi	(N1)	01/03-03/05	8HX (DV4TD)	50	330026	330060, 330716, 330718	330502	330681	
	Break (N2)	01/03-08/05	8HX (DV4TD)	50	330026	330060, 330716, 330718	330502, 330645	330681	
	Coupe (N0)	01/03-03/05	8HX (DV4TD)	50	330026	330060, 330716, 330718	330502, 330645	330681	
1.4 i	(N1)	04/97-03/05	KFW (TU3JP), KFX (TU3JP)	55	330010, 330026	330060, 330716, 330718	330122, 330154, 330188, 330551, 330588, 330637	330249, 330513	
	Break (N2)	10/97-08/05	KFW (TU3JP), KFX (TU3JP)	55	330010, 330026	330060, 330716, 330718	330122, 330154, 330188, 330551, 330588, 330637	330249, 330513	
	Coupe (N0)	03/98-03/05	KFW (TU3JP), KFX (TU3JP)	55	330010, 330026	330060, 330716, 330718	330122, 330154, 330188, 330551, 330588, 330637	330249, 330513	
1.5 D	(N1)	04/97-09/00	VJZ (TUD5)	42	330023, 330026	330060	330188	330249, 330513	
	Break (N2)	10/97-09/00	VJZ (TUD5)	42	330023, 330026	330060	330188	330249, 330513	
1.6 16V	(N1)	09/00-03/05	NFU (TU5JP4)	80	330026	330060, 330716, 330718	330551, 330637	330513	
	Break (N2)	09/00-08/05	NFU (TU5JP4)	80	330026	330060, 330716, 330718	330551, 330637	330513	
	Coupe (N0)	09/00-03/05	NFU (TU5JP4)	80	330026	330060, 330716, 330718	330551, 330637	330513	
1.6 i	(N1)	04/97-09/00	NFZ (TU5JP)	65	330010	330060	330122, 330154, 330188, 330588	330249, 330513	
	Break (N2)	10/97-09/00	NFZ (TU5JP)	65	330010	330060	330122, 330154, 330188, 330588	330249, 330513	
	Coupe (N0)	02/98-09/00	NFZ (TU5JP)	65	330010	330060	330122, 330154, 330188, 330588, 330645	330249, 330513	
1.8 D	(N1)	04/97-09/00	161A (XUD7), A9A (XUD7)	43	330023, 330026	330060	330109, 330188, 330272, 330588, 330639	330251, 330681	
	Break (N2)	10/97-09/00	A9A (XUD7)	43	330023, 330026	330060	330109, 330188, 330272, 330588, 330639	330251, 330681	
1.8 i	(N1)	04/97-09/00	LFX (XU7JB)	66	330023, 330026	330060	330109, 330122, 330188, 330588	330251, 330681	
	Break (N2)	10/97-09/00	LFX (XU7JB)	66	330023, 330026	330060	330109, 330122, 330188, 330588	330251, 330681	
	Coupe (N0)	02/98-09/00	LFX (XU7JB)	66	330023, 330026	330060	330109, 330122, 330188, 330588	330251, 330681	
	Coupe (N0)	02/98-09/00	LFZ (XU7JP)	74	330023, 330026	330060	330109, 330122, 330271, 330588, 330645		

OPS Oil Pressure Switches **BLS** Brake Light Switches **TT-RF** Temperature Transmitter and Radiator Fan Switches **RLS** Reverse Light Switches **VAR** Various

ERA S.p.A. Moncalieri (TO) Italy - tel: +39 011 6891511 - fax: +39 011 6472862 - www.eranet.it

Vehicle		Date	Engine	kW	OPS	BLS	TT-RF	RLS	VAR
1.8 i 16V	(N1)	04/97-09/00	LFY (XU7JP4)	81	330023, 330026	330060	330109, 330122, 330188, 330588	330251, 330681	
	Break (N2)	10/97-09/00	LFY (XU7JP4)	81	330023, 330026	330060	330109, 330122, 330188, 330588	330251, 330681	
	Coupe (N0)	02/98-09/00	LFY (XU7JP4)	81	330023, 330026	330060	330109, 330122, 330188, 330588	330251, 330681	
1.8 i Aut.	(N1)	04/97-09/00	LFZ (XU7JP)	74	330023, 330026	330060	330109, 330122, 330271, 330588		
	Break (N2)	10/97-09/00	LFZ (XU7JP)	74	330023, 330026	330060	330109, 330122, 330271, 330588		
1.9 D	(N1)	04/97-09/00	DJY (XUD9A)	50	330023, 330026	330060	330109, 330188, 330272, 330588, 330639	330251, 330681	
	Break (N2)	10/97-09/00	DJY (XUD9A)	50	330023, 330026	330060	330109, 330188, 330272, 330588, 330639	330251, 330681	
	Coupe (N0)	02/98-09/00	DJY (XUD9A)	50	330023, 330026	330060	330109, 330188, 330272, 330588, 330639	330251, 330681	
	(N1)	07/98-03/05	WJY (DW8B), WJZ (DW8)	51	330026	330060, 330716, 330718	330155, 330188, 330624	330251, 330681	
	Break (N2)	07/98-08/05	WJY (DW8B), WJZ (DW8)	51	330026	330060, 330716, 330718	330155, 330188, 330624	330251, 330681	
	Coupe (N0)	02/99-03/05	WJY (DW8B), WJZ (DW8)	51	330026	330060, 330716, 330718	330155, 330188, 330624	330251, 330681	
	Break (N2)	01/98-09/00	DHV (XUD9BSD)	55	330023, 330026	330060	330109, 330134, 330272, 330588	330251, 330681	
1.9 SD	(N1)	01/98-09/00	DHV (XUD9BSD)	55	330023, 330026	330060	330109, 330134, 330272, 330588	330251, 330681	
1.9 TD	(N1)	04/97-09/00	DHY (XUD9TE/Y)	66	330023, 330026	330060	330109, 330272, 330575, 330588	330251, 330681	
	Break (N2)	10/97-09/00	DHY (XUD9TE/Y)	66	330023, 330026	330060	330109, 330272, 330575, 330588	330251, 330681	
	Coupe (N0)	02/98-09/00	DHY (XUD9TE/Y)	66	330023, 330026	330060	330109, 330272, 330575, 330588	330251, 330681	
2.0 16V	(N1)	07/98-09/00	RFV (XU10J4R)	97	330026	330060	330109, 330122, 330588	330251, 330681	
	Break (N2)	07/98-09/00	RFV (XU10J4R)	97	330026	330060	330109, 330122, 330588	330251, 330681	
	(N1)	09/00-03/05	RFN (EW10J4)	100	330026	330060, 330716, 330718	330624	330681	
	Break (N2)	09/00-08/05	RFN (EW10J4)	100	330026	330060, 330716, 330718	330624	330681	
	Coupe (N0)	09/00-03/05	RFN (EW10J4)	100	330026	330060, 330716, 330718	330624	330681	
	(N1)	04/97-09/00	RFS (XU10J4RS)	120	330023, 330026	330060	330109, 330122, 330188, 330588	330251, 330681	
2.0 HDi 109	(N1)	05/01-03/05	RHZ (DW10ATED)	80	330026	330060, 330716, 330718	330502	330681	
	Break (N2)	05/01-08/05	RHZ (DW10ATED)	80	330026	330060, 330716, 330718	330502	330681	
	Coupe (N0)	05/01-03/05	RHZ (DW10ATED)	80	330026	330060, 330716, 330718	330502	330681	
2.0 HDi 90	(N1)	02/99-03/05	RHY (DW10TD)	66	330026	330060, 330716, 330718	330502, 330551, 330742	330251, 330681	
2.0 HDI 90	Break (N2)	02/99-08/05	RHY (DW10TD)	66	330026	330060, 330716, 330718	330502, 330551, 330742	330251, 330681	

OPS Oil Pressure Switches **BLS** Brake Light Switches **TT-RF** Temperature Transmitter and Radiator Fan Switches **RLS** Reverse Light Switches **VAR** Various

Vehicle		Date	Engine	kW	OPS	BLS	TT-RF	RLS	VAR
2.0 HDI 90	Coupe (N0)	02/99-03/05	RHY (DW10TD)	66	330026	330060, 330716, 330718	330502, 330551, 330742	330251, 330681	
2.0 i 16V	Coupe (N0)	02/98-03/05	RFS (XU10J4RS)	120	330026	330060, 330716, 330718	330109, 330588	330681	
XSARA PICASSO		**12/99 -**							
1.6	(N68)	12/99-	NFZ (TU5JP)	65	330010	330704, 330718	330154, 330188	330681	
	(N68)	12/99-	NFV (TU5JP)	70		330704, 330718, 330722	330637	330681	
1.6 16V	(N68)	09/05-	NFU (TU5JP4)	80	330026	330704, 330718, 330722	330188, 330552, 330637	330681	
1.6 Chrono	(N68)	04/01-10/04	--	74	330026		330188, 330551		
1.6 HDi	(N68)	09/05-	--	66	330026	330718, 330722	330502	330681	
	(N68)	05/04-	DV6TED4	80	330026	330718, 330722	330502	330681	
1.8 16V	(N68)	02/00-	6FZ (EW7J4), LFY (XU7JP4)	85	330026	330704, 330718, 330722	330188, 330624	330681	
2.0 16V	(N68)	01/03-	RFN (EW10J4)	100	330026	330704, 330718, 330722		330681	
2.0 HDi	(N68)	12/99-	RHY (DW10TD)	66	330026	330430, 330704, 330718, 330722	330502	330681	
ZX		**03/91 - 02/98**							
1,1	(N2)	03/91-08/93	H1A	40	330010	330704	330086, 330188, 330645	330249	
1.1	(N2)	03/91-06/97	HDZ (TU1M)	44	330010	330704	330110, 330116, 330147, 330188	330249	
1.4	(N2)	03/91-06/97	KDZ (TU3M/Z)	55	330010	330704	330109, 330110, 330116, 330147, 330188, 330588	330249	
1.4 D	(N2)	07/94-10/97	K9Y (TUD3Y)	37	330023	330704	330147, 330188	330249	
1.4 i	(N2)	03/91-06/97	KDX (TU3M/Z), KDZ (TU3M/Z), KFX (TU3JP)	55	330010	330704	330109, 330110, 330116, 330122, 330147, 330154, 330188, 330588	330249	
	Break (N2)	10/93-10/97	KDX (TU3M/Z), KDY (TU3M)	55	330010	330704	330110, 330122, 330147, 330154, 330188, 330588	330249	
1.6 i	(N2)	03/91-06/97	BDY (XU5M), BFZ (XU5JP)	65	330023	330704	330109, 330110, 330122, 330147, 330188, 330271, 330272, 330554, 330588	330251	
	Break (N2)	10/93-10/97	BDY (XU5M), BFZ (XU5JP)	65	330023	330704	330109, 330110, 330122, 330147, 330188, 330271, 330272, 330554, 330588	330251	
1.8 D	(N2)	06/93-06/97	161A (XUD7)	44	330010, 330023	330704	330109, 330147, 330194, 330272, 330588	330251	
	Break (N2)	10/93-10/97	161A (XUD7)	44	330010, 330023	330704	330109, 330147, 330194, 330272, 330588	330251	

OPS Oil Pressure Switches **BLS** Brake Light Switches **TT-RF** Temperature Transmitter and Radiator Fan Switches **RLS** Reverse Light Switches **VAR** Various

ERA S.p.A. Moncalieri (TO) Italy - tel: +39 011 6891511 - fax: +39 011 6472862 - www.eranet.it

Vehicle		Date	Engine	kW	OPS	BLS	TT-RF	RLS	VAR
1.8 i	(N2)	07/92-06/97	LFZ (XU7JP)	74	330023	330704	330109, 330122, 330147, 330188, 330271, 330272, 330588	330251	
	Break (N2)	10/93-10/97	LFZ (XU7JP)	74	330023	330704	330109, 330122, 330147, 330188, 330271, 330272, 330588	330251	
1.8 i 16V	(N2)	01/96-06/97	LFY (XU7JP4)	81	330023	330704	330109, 330122, 330147, 330188, 330271, 330272, 330588	330251	
	Break (N2)	01/96-02/98	LFY (XU7JP4)	81	330023	330704	330109, 330122, 330147, 330188, 330271, 330272, 330588	330251	
1.9	(N2)	03/91-09/93	--	96	330023	330704	330109, 330116, 330188, 330271, 330272, 330554, 330588	330251	
1.9 D	(N2)	03/91-06/97	DJZ (XUD9Y)	47	330010, 330023	330704	330109, 330134, 330147, 330194, 330272, 330588, 330639	330251	
	Break (N2)	10/93-10/97	DJZ (XUD9Y)	47	330010, 330023	330704	330109, 330134, 330147, 330194, 330272, 330588, 330639	330251	
	(N2)	06/94-06/97	D9B (XUD9A/U)	50	330010, 330023	330704	330109, 330134, 330147, 330194, 330272, 330588, 330639	330251	
	Break (N2)	06/94-10/97	D9B (XUD9A/U)	50	330010, 330023	330704	330109, 330134, 330147, 330194, 330272, 330588, 330639	330251	
1.9 i	(N2)	03/91-06/97	DKZ (XU9JA)	88	330023	330704	330109, 330116, 330188, 330271, 330272, 330554, 330588	330251	
1.9 TD	(N2)	07/92-06/97	DHY (XUD9TE/Y)	66	330023	330704	330109, 330147, 330272, 330575, 330588	330251	
	Break (N2)	10/93-10/97	DHY (XUD9TE/Y)	66	330023	330704	330109, 330147, 330272, 330575, 330588	330251	
2.0	(N2)	07/94-10/97	--	90			330576		
	(N2)	09/96-10/97	--	122			330576		
2.0 i	(N2)	07/92-06/97	RFX (XU10J2C)	89	330023	330704	330109, 330122, 330147, 330188, 330271, 330272, 330576, 330588	330251	
2.0 i 16V	(N2)	06/94-06/97	RFT (XU10J4/Z)	110	330023	330704	330109, 330122, 330147, 330188, 330271, 330272, 330576, 330588	330251	

OPS Oil Pressure Switches **BLS** Brake Light Switches **TT-RF** Temperature Transmitter and Radiator Fan Switches **RLS** Reverse Light Switches **VAR** Various

Vehicle		Date	Engine	kW	OPS	BLS	TT-RF	RLS	VAR
2.0 i 16V	(N2)	07/92-10/94	RFT (XU10J4/Z), RFY (XU10J4/Z)	112	330023	330704	330109, 330122, 330147, 330188, 330271, 330272, 330576, 330588	330251	
	(N2)	05/96-06/97	RFS (XU10J4RS)	120	330023	330704	330109, 330122, 330188, 330271, 330272, 330576, 330588	330251	

DACIA

DUSTER 04/10 -

1.5 dCi		04/10-	K9K 796	63	330699	330731	330692		
		06/10-	K9K 896	79	330630	330731	330558		
1.5 dCi 4x4		06/10-	K9K 898	79	330630	330731	330558		
1.6 16V		04/10-	K4M 690	77	330699	330731			
1.6 16V 4x4		06/10-	K4M 606	77	330699	330731			

LOGAN 09/04 -

1.4	(LS_)	09/04-	K7J 710	55	330577	330707, 330731	330138	330543, 330750	
	EXPRESS (FS_)	03/09-	K7J 710	55		330707, 330731		330750	
1.5 dCi	(LS_)	09/05-	K9K 790	48	330699	330707, 330731	330692	330543, 330750	
	(LS_)	01/06-	K9K 792	50	330699	330707, 330731	330692	330543, 330750	
	EXPRESS (FS_)	03/09-	K9K 792	50	330699	330707, 330731	330692	330750	
	Pickup (US_)	03/08-	K9K 792	50	330699	330707, 330731	330692	330750	
	(LS_)	09/07-	K9K 796	63	330699	330707, 330731	330692	330543, 330750	
	EXPRESS (FS_)	03/09-	K9K 796	63	330699	330707, 330731	330692	330750	
	Pickup (US_)	03/08-	K9K 796	63	330699	330707, 330731	330692	330750	
1.6	(LS_)	09/04-	K7M 710	64	330699	330707, 330731	330138	330543, 330750	
	EXPRESS (FS_)	03/09-	K7M 710	64	330699	330707, 330731		330750	
	Pickup (US_)	03/08-	K7M 710	64	330699	330707, 330731		330750	
1.6 16V	(LS_)	02/06-	K4M 690	77	330699	330707, 330731	330138	330543, 330750	

LOGAN MCV 02/07 -

1.4	(KS_)	02/07-	K7J 710	55	330577	330707, 330731	330138	330543, 330750	
1.5 dCi	(KS_)	02/07-	K9K 792	50	330699	330707, 330731	330692	330543, 330750	
	(KS_)	09/07-	K9K 796	63	330699	330707, 330731	330692	330543, 330750	
1.6	(KS_)	02/07-	K7M 710	64	330699	330707, 330731	330138	330543, 330750	
1.6 16V	(KS_)	02/07-	K4M 690	77	330699	330707, 330731	330138	330543, 330750	

SANDERO 06/08 -

1.2 16V		11/08-	D4F 732	55		330731			
1.4		06/08-	K7J 710	55	330577	330707, 330731	330138	330543, 330750	
1.5 dCi		11/08-	K9K 792	50	330699	330707, 330731	330692	330750	
		11/08-	K9K 796	63	330699	330707, 330731	330692		
1.6		06/08-	K7M 710	64	330699	330707, 330731	330138	330543, 330750	

OPS Oil Pressure Switches **BLS** Brake Light Switches **TT-RF** Temperature Transmitter and Radiator Fan Switches **RLS** Reverse Light Switches **VAR** Various

ERA S.p.A. Moncalieri (TO) Italy - tel: +39 011 6891511 - fax: +39 011 6472862 - www.eranet.it

Vehicle		Date	Engine	kW	OPS	BLS	TT-RF	RLS	VAR
DAEWOO									
ESPERO			**10/91 - 09/99**						
1.5	(KLEJ)	10/97-09/99	--	55	330564				
1.5 16V	(KLEJ)	10/93-09/94	--	65	330564				
	(KLEJ)	02/95-06/99	A15MF	66	330564	330429	330085, 330107	330244	
1.8	(KLEJ)	02/95-09/99	C18LE	66	330564				
	(KLEJ)	02/95-06/99	C18LE	70	330564	330429	330117	330244	
2.0	(KLEJ)	10/91-09/93	C20LZ	74	330564				
	(KLEJ)	02/95-06/99	C20LE	77	330564	330429	330117	330244	
	(KLEJ)	10/93-09/94	C20LE	81	330564				
EVANDA			**08/02 -**						
	(KLAL)	08/02-	L88	96	330364		330089, 330107	330244	
KALOS			**09/02 -**						
1.2	(KLAS)	04/03-	B12S1	53	330009, 330567		330582, 330651, 330665	330571	
1.4	(KLAS)	09/02-	F14S3	61	330364		330107, 330582, 330665	330244	
	Saloon (KLAS)	11/02-12/04	F14S3	61	330364		330107, 330665	330244	
	Saloon (KLAS)	05/03-12/04	F14D3	69	330364		330107, 330665	330244	
1.4 16V	(KLAS)	04/03-	F14D3	69	330364		330107, 330582, 330665	330244, 330571	
KORANDO			**01/99 -**						
2.3	(KJ)	01/99-	--	105		330701			
	Cabrio (KJ)	02/99-	--	105		330701			
2.9 D	(KJ)	01/99-	MB-OM 662	72		330701	330104		
	Cabrio (KJ)	02/99-	MB-OM 662	72		330701	330104		
2.9 TD	(KJ)	01/99-	MB-OM 601 29TD	88		330701	330104		
	Cabrio (KJ)	02/99-	MB-OM 601 29TD	88		330701	330104		
3.2 4x4	(KJ)	01/99-	M 104.995	156		330701	330104		
LACETTI			**02/04 -**						
1.4	Hatchback (KLAN)	02/04-	F14D3	70	330364		330107	330244	
1.6	Hatchback (KLAN)	02/04-	F16D3	80	330364		330107	330244	
1.8	Hatchback (KLAN)	02/04-	T18SED	90	330364		330089, 330107	330244	
LANOS			**05/97 -**						
1.4	(KLAT)	05/97-	A14SMS	55	330364	330436	330089, 330107	330244	
	Saloon (KLAT)	05/97-	A14SMS	55	330364	330436	330089, 330107	330244	
1.5	(KLAT)	05/97-	A15SMS	63	330364	330436	330089, 330107	330244	
	Saloon (KLAT)	05/97-	A15SMS	63	330364	330436	330089, 330107	330244	
1.6 16V	(KLAT)	05/97-	A16DMS	78	330364	330436	330089, 330107	330244	
	Saloon (KLAT)	05/97-	A16DMS	78	330364	330436	330089, 330107	330244	

OPS Oil Pressure Switches **BLS** Brake Light Switches **TT-RF** Temperature Transmitter and Radiator Fan Switches **RLS** Reverse Light Switches **VAR** Various

Vehicle		Date	Engine	kW	OPS	BLS	TT-RF	RLS	VAR
LEGANZA			**06/97 - 04/04**						
2.0 16V	(KLAV)	07/00-	T20SED	93	330364	330434, 330436	330089, 330107	330244	
	(KLAV)	06/97-12/02	X 20 SED	98	330364	330434, 330436	330089, 330107	330244	
2.2 16V	(KLAV)	04/99-12/02	T22SED	100	330364	330434, 330436	330089, 330107	330244	
LEMANS			**09/90 - 07/95**						
1.5		09/90-07/95	G15MG	65	330564				
1.6		09/90-07/95	--	55	330564				
MATIZ			**09/98 -**						
0.8	(KLYA)	09/98-	F8CV	38	330009, 330567	330429, 330434	330089, 330107, 330582, 330665	330570, 330571	
1.0	(KLYA)	01/03-	B10S	47	330009, 330567	330429	330089, 330582, 330651, 330665		
MUSSO			**07/98 -**						
2.2 TD	(FJ)	09/99-	MB OM 601	74		330701	330104		
2.3	(FJ)	01/99-	M 111.970	103		330701			
2.9 TD 4x4	(FJ)	01/99-	MB-OM 601 29TD	88		330701	330104		
3.2 4x4	(FJ)	01/99-	M 104.992	162		330701	330104		
NEXIA			**02/95 - 03/01**						
1.5	(KLETN)	08/96-08/97	G15MF	44	330564	330429	330089, 330107, 330563	330244	
	Saloon (KLETN)	08/96-08/97	G15MF	44	330564	330429	330089, 330107, 330563	330244	
	(KLETN)	02/95-08/97	G15MF	52	330564	330429	330089, 330107, 330563	330244	
	Saloon (KLETN)	02/95-08/97	G15MF	52	330564	330429	330089, 330107, 330563	330244	
	(KLETN)	02/95-08/97	G15MF	55	330564	330429	330089, 330107, 330563	330244	
	Saloon (KLETN)	02/95-08/97	G15MF	55	330564	330429	330089, 330107, 330563	330244	
1.5 16V	(KLETN)	02/95-08/97	A15MF	66	330564	330429	330089, 330107, 330563	330244	
	Saloon (KLETN)	02/95-08/97	A15MF	66	330564	330429	330089, 330107, 330563	330244	
NUBIRA			**04/97 -**						
1.6	Saloon (KLAN)	07/03-	F16D3	80	330364		330107	330244	
1.6 16V	Saloon (KLAJ)	07/00-	A16DMS	76	330364		330089, 330107	330244	
	Wagon (KLAJ)	12/00-	A16DMS	76	330364		330089, 330107	330244	
	(KLAJ)	05/97-	A16DMS	78	330364	330434, 330436	330089, 330107	330244	
	Saloon (KLAJ)	05/97-	A16DMS	78	330364	330434, 330436	330089, 330107	330244	
	Wagon (KLAJ)	05/97-	A16DMS	78	330364	330434, 330436	330089, 330107	330244	
1.8	Saloon (KLAN)	07/03-	T18SED	90	330364		330089, 330107	330244	
2.0 16V	Saloon (KLAJ)	12/00-	T20SED	93	330364		330089, 330107	330244	
	Wagon (KLAJ)	12/00-	T20SED	93	330364		330089, 330107	330244	

OPS Oil Pressure Switches **BLS** Brake Light Switches **TT-RF** Temperature Transmitter and Radiator Fan Switches **RLS** Reverse Light Switches **VAR** Various

ERA S.p.A. Moncalieri (TO) Italy - tel: +39 011 6891511 - fax: +39 011 6472862 - www.eranet.it

Vehicle		Date	Engine	kW	OPS	BLS	TT-RF	RLS	VAR
2.0 16V	(KLAJ)	05/97-	X 20 SED	98	330364		330089, 330107	330244	
	Saloon (KLAJ)	05/97-	X 20 SED	98	330364		330089, 330107	330244	
	Wagon (KLAJ)	05/97-	X 20 SED	98	330364		330089, 330107	330244	
REZZO			**09/00 -**						
1.6	(KLAU)	09/00-	A16DMS	77	330364		330089	330244	
1.8	(KLAU)	09/00-	--	66	330364		330089	330244	
	(KLAU)	09/00-	F18D2	67	330364		330089	330244	
	(KLAU)	09/00-	A18DMS	72	330364		330089	330244	
	(KLAU)	09/00-	--	74	330364		330089	330244	
2.0	(KLAU)	09/01-	X 20 SED	89	330364		330089, 330107	330244	
	(KLAU)	09/00-	T20SED	94	330364		330089, 330107	330244	
DAIHATSU									
APPLAUSE			**06/89 - 05/00**						
1.6 16V	I (A101, A111)	06/89-07/97	HD	66	330008		330095		
	II (A101)	07/97-05/00	HD-E	73	330008				
	I (A101, A111)	06/89-07/97	HD-E	77	330008		330095, 330100, 330619		
1.6 16V 4WD	I (A101, A111)	06/89-07/97	HD-E	77	330008		330095, 330100, 330619		
CHARADE			**01/87 -**						
1.0	IV (G200, G202)	09/94-03/96	CB 22	38	330008		330100		
	III (G100, G101, G102)	11/90-12/92	CB 90	40	330009, 330567		330100, 330135		
1.3	IV (G200, G202)	09/96-11/99	HC	44	330008		330100		
	III Saloon (G102)	11/90-02/93	HCE	66			330095, 330135		
1.3 16V	IV (G200, G202)	05/96-11/99	HCE	55	330008		330100		
1.3 i	III (G100, G101, G102)	06/88-12/92	HCE	66			330095, 330135		
1.3 i 16V	IV (G200, G202)	01/93-11/99	HC	62	330008		330100, 330619		
1.3 i 4WD	III (G100, G101, G102)	06/88-01/93	HCE	66			330095, 330135		
1.5 i 16V	IV (G200, G202)	01/97-11/99	HEE, HEEG	66	330008		330100		
	IV Saloon (G203)	08/94-	HEE	66	330008		330100		
1.6 GTi	IV (G200, G202)	03/93-11/99	HD-E	77	330008		330100, 330619		
CUORE			**09/85 - 05/03**						
0.8	II (L80, L81)	11/89-12/90	ED 10	29	330008		330095		
	III (L201)	10/90-12/94	ED 10 K	30	330008		330095		
	II (L80, L81)	09/85-06/90	ED 10	32	330008		330095		
	IV (L501)	01/95-11/96	ED 20	32	330008		330100, 330619		
0.8 4WD	II (L80, L81)	09/86-10/88	ED 10	32	330008		330095		
1.0 i	VI (L7_)	10/98-05/03	EJDE	41	330008	330039			
FEROZA Hard Top			**10/88 -**						
1.6 16V	(F300)	10/88-	HDC	63	330008		330095, 330100		

OPS Oil Pressure Switches **BLS** Brake Light Switches **TT-RF** Temperature Transmitter and Radiator Fan Switches **RLS** Reverse Light Switches **VAR** Various

Vehicle		Date	Engine	kW	OPS	BLS	TT-RF	RLS	VAR
1.6 i 16V	(F300)	10/88-	HD-E	70	330008		330095, 330100, 330619		
FEROZA Soft Top			**10/88 -**						
1.6 16V	(F300)	10/88-	HDC	63	330008		330095, 330100		
1.6 i 16V	(F300)	10/88-	HD-E	70	330008		330095, 330100, 330619		
GRAN MOVE			**10/96 -**						
1.5 16V	(G3)	10/96-07/98	HEEG	66	330008				
MOVE			**06/94 -**						
0.8	(L6, L9)	10/96-	ED 20	31	330008		330100, 330619		
1.0 i	(L6, L9)	10/98-	EJDE	41	330008	330039			
ROCKY Hard Top			**06/84 - 07/93**						
2.8 D	(F7, F8)	02/85-	DL	54	330008		330100		
ROCKY Soft Top			**02/85 - 04/93**						
	(F7, F8)	02/85-	DL	54	330008		330100		
SIRION			**04/98 - 04/05**						
1.0 i	(M1)	04/98-09/00	EJDE	41	330008	330039			
1.0 i 4WD	(M1)	04/99-09/00	EJDE	41	330008	330039			
TERIOS			**05/97 - 10/05**						
1.3 4WD	(J1)	10/97-10/00	HE-EJ	61	330008	330039			
YRV			**02/01 -**						
1.0	(M2)	02/01-	EJ-VE	43	330008	330039			
1.3	(M2)	02/01-	K3-VE	64	330008	330039			
1.3 4WD	(M2)	02/01-	K3-VE	64	330008	330039			
FIAT									
124			**07/66 - 07/75**						
1200		07/66-10/73	--	44	330000	330032	330082, 330156		
	Familiare	04/67-05/73	--	44	330000	330032	330082, 330156		
1400 Special		12/68-12/72	124 B2.000	51	330000	330032	330082, 330156		
1600 Special T		01/73-07/75	--	70	330000	330032	330082, 330156		
126			**09/72 - 09/00**						
600		09/72-06/77	126 A.000	17	330001	330032			
650		07/77-09/87	126 A1.000, 126 A1.048	17	330000	330032	330082, 330294		
700		09/87-06/96	126 A2.000, 126 A2.048	19	330000	330032	330082, 330294		
127			**06/71 - 12/86**						
0.9		06/71-05/83	100 GL.000	33	330001	330032	330082, 330156, 330291		

OPS Oil Pressure Switches **BLS** Brake Light Switches **TT-RF** Temperature Transmitter and Radiator Fan Switches **RLS** Reverse Light Switches **VAR** Various

ERA S.p.A. Moncalieri (TO) Italy - tel: +39 011 6891511 - fax: +39 011 6472862 - www.eranet.it

Vehicle		Date	Engine	kW	OPS	BLS	TT-RF	RLS	VAR
1.0		04/77-12/86	127 A.000	37	330000	330032	330291	330338	
	Panorama	01/77-12/86	127 A.000	37	330000	330032	330291	330338	
1.3 Diesel		04/81-12/86	127 A5.000	33		330032	330082	330338	
	Panorama	06/81-12/86	127 A5.000	33		330032	330082	330338	
128			**03/69 - 12/84**						
1.1		03/69-12/84	128 A.000	40	330000	330032	330156, 330291	330338	
	Familiare	10/69-10/82	128 A.000	40	330000	330032	330156, 330291	330338	
131			**10/74 - 12/86**						
1.3 Mirafiori		10/74-09/81	131 A6.000	40	330000	330032	330082, 330291		
	Familiare/Panorama	03/75-12/78	131 A6.000	40	330000	330032	330082, 330291		
132			**04/72 - 12/82**						
1.6		05/77-09/82	132 C.000	65	330000	330032	330082, 330291		
2.0		05/77-06/81	132 C2.000	82	330000	330032	330082, 330291		
242-SERIE			**10/75 - 07/82**						
1.6	Box	10/75-07/82	124 B3.000	46	330000		330156		
	Bus	10/75-07/82	124 B3.000	46	330000		330156		
500			**01/57 -**						
0.5		01/65-12/75	110 F.000, 120.000	13	330001	330062			
0.6		05/73-01/76	--	13	330001	330062			
1.2		10/07-	169 A4.000	51		330081, 330517, 330735	330553	330258	
1.3 D Multijet		10/07-	169 A1.000	55		330081, 330517, 330735		330258	
		12/09-	199 B1.000	70		330517			
1.4		10/07-	169 A3.000	74		330081, 330517, 330735		330258	
1.4 Abarth		08/08-	312 A1.000	99		330081, 330517, 330735	330553	330243	
		08/08-	312 A1.000	118		330517, 330735			
500 C			**09/09 -**						
1.2		09/09-	169 A4.000	51		330517, 330735			
1.3 D Multijet		09/09-	169 A1.000	55		330517, 330735			
		09/09-	199 B1.000	70		330517			
1.4		09/09-	169 A3.000	74		330517, 330735			
600			**03/55 - 02/71**						
0.6		03/55-05/61	--	15	330001	330062			
850			**07/64 - 10/72**						
0.8		07/64-10/72	100 G.000	25		330032			

OPS Oil Pressure Switches **BLS** Brake Light Switches **TT-RF** Temperature Transmitter and Radiator Fan Switches **RLS** Reverse Light Switches **VAR** Various

Vehicle		Date	Engine	kW	OPS	BLS	TT-RF	RLS	VAR
ARGENTA		**05/77 - 03/87**							
1600	(132A)	04/81-12/85	132 D.000	72	330000	330032	330082, 330156		
2000	(132A)	06/78-12/85	132 C2.000, 132 D1.000	83	330000	330336	330082, 330156		
2000 i.e.	(132A)	06/81-07/86	132 C3.000	90	330000	330336	330082, 330156		
2500 Diesel	(132A)	06/81-11/85	8144.61	53	330000	330032, 330336	330082		
2500 Turbodiesel	(132A)	07/83-08/85	8144.61.500.81	66	330000	330336	330082, 330201		
BARCHETTA		**03/95 -**							
1.8 16V	(183)	04/95-	183 A1.000, 188 A6.000	96		330064	330082, 330116, 330143, 330495	330243	
BRAVA		**10/95 - 12/02**							
1.2 16V 80	(182)	10/00-10/01	188 A5.000	59		330050, 330064	330495	330258	
	(182)	12/98-10/00	182 B2.000	60		330050, 330064	330143	330258	
1.4	(182)	10/95-10/01	182 A5.000	55			330082, 330116, 330293, 330295	330258, 330515	
1.4 12 V	(182)	10/95-08/98	182 A3.000	59			330082, 330116, 330293, 330295	330243, 330258, 330515	
1.6 16V	(182)	10/95-10/01	182 A6.000	66			330082, 330293, 330295, 330555	330243, 330515	
	(182)	02/96-10/01	182 A4.000	76		330050, 330064	330082, 330143, 330293, 330295, 330555	330243, 330515	
1.8 GT 16V	(182)	10/95-10/01	182 A2.000	83		330050, 330064	330082, 330121, 330143	330243, 330515	
1.9 D	(182)	10/95-10/01	160 A7.000	48			330082, 330279	330243, 330515	
1.9 JTD	(182)	09/00-10/01	182 B9.000	74		330050, 330064	330137, 330495	330243	
1.9 JTD 105	(182)	12/98-10/01	182 B4.000	77		330050, 330064	330137, 330143	330243	
1.9 TD 100 S	(182)	03/96-10/01	182 A7.000	74		330050, 330064	330082, 330121, 330279, 330295	330243, 330515	
1.9 TD 75 S	(182)	03/96-10/01	182 A8.000	55		330050, 330064	330082, 330121, 330295, 330641	330243, 330515	
BRAVO		**10/95 -**							
1.2 16V 80	I (182)	10/00-10/01	188 A5.000	59		330050, 330064	330495	330258	
	I (182)	12/98-10/00	182 B2.000	60		330064	330143	330258	
1.4	I (182)	10/95-10/01	182 A5.000	55			330082, 330116, 330293, 330295	330258, 330515	
	I (182)	10/95-10/01	182 A3.000	59			330082, 330116, 330293, 330295	330258, 330515	
	II (198)	04/07-	192 B2.000	66		330081, 330517		330258	
1.4 T-Jet	II (198)	09/07-	198 A4.000	88		330081, 330517	330553		
	II (198)	09/07-	198 A1.000	110		330081, 330517	330553		
1.6	I (182)	09/00-02/02	182 B6.000	76		330064	330495	330243	
1.6 16V	I (182)	10/95-10/01	182 A6.000	66			330082, 330293, 330295, 330555	330243, 330515	
	I (182)	03/96-10/01	182 A4.000	76		330064	330082, 330143, 330293, 330295, 330555	330243, 330515	

OPS Oil Pressure Switches **BLS** Brake Light Switches **TT-RF** Temperature Transmitter and Radiator Fan Switches **RLS** Reverse Light Switches **VAR** Various

ERA S.p.A. Moncalieri (TO) Italy - tel: +39 011 6891511 - fax: +39 011 6472862 - www.eranet.it

Vehicle		Date	Engine	kW	OPS	BLS	TT-RF	RLS	VAR
1.6 D Multijet	II (198)	03/08-	198 A3.000	77		330081, 330517		330260	
	II (198)	03/08-	198 A2.000	88		330081, 330517		330260	
1.8 GT	I (182)	10/95-10/01	182 A2.000	83		330064	330082, 330121, 330143, 330293, 330295	330243, 330515	
1.9 D	I (182)	10/95-10/01	160 A7.000	48			330082, 330279	330243, 330515	
1.9 D Multijet	II (198)	04/07-12/08	192 B5.000	66		330081, 330517	330142	330260	
	II (198)	04/07-	192 A8.000	88		330081, 330517	330142	330260	
	II (198)	04/07-	937 A5.000	110		330081, 330517	330142	330260	
1.9 JTD	I (182)	09/00-10/01	182 B9.000	74		330050, 330064	330137, 330495	330243	
1.9 JTD 105	I (182)	12/98-10/01	182 B4.000	77		330050, 330064	330137, 330143	330243	
1.9 TD 100 S	I (182)	03/96-10/01	182 A7.000	74		330064	330082, 330120, 330121, 330279, 330295	330243, 330515	
1.9 TD 75 S	I (182)	03/96-10/01	182 A8.000	55		330064	330082, 330120, 330121, 330295, 330641	330243, 330515	
2.0 D Multijet	II (198)	09/08-	844 A2.000	121		330517			
2.0 HGT 20V	I (182)	10/95-07/98	182 A1.000	108			330082, 330116, 330293, 330295	330243, 330515	
	I (182)	07/98-10/01	182 B7.000	113		330050, 330064	330143	330243	
CINQUECENTO			**07/91 - 07/99**						
0.7	(170)	12/91-01/96	170 A.000	23		330032	330179		
0.7 i	(170)	07/94-01/98	170 A.046	22		330032	330179		
0.9	(170)	07/91-12/93	170 A1.000	30		330032	330082, 330120, 330179	330241	
0.9 i.e.	(170)	07/91-12/93	170 A1.046	30		330032	330082, 330120, 330179	330241	
0.9 i.e. S	(170)	07/91-07/99	1170 A1.000, 1170 A1.046	29		330032	330082, 330120, 330179	330241	
1.1 Sporting	(170)	10/94-01/98	176 B2.000	40		330032	330082, 330120, 330179	330258	
COUPE			**11/93 - 08/00**						
1.8 16V	(FA/175)	03/96-08/00	183 A1.000	96		330051, 330064	330082, 330116, 330143, 330228	330243	
2.0 16V	(FA/175)	11/93-08/96	836 A3.000	102		330051	330082, 330228, 330273	330243	
2.0 16V Turbo	(FA/175)	11/93-08/96	175 A1.000	140		330051	330082, 330228, 330273	330343	
2.0 20V	(FA/175)	08/96-04/98	182 A1.000	108		330064	330082, 330121, 330228, 330273	330243	
	(FA/175)	04/98-08/00	182 B3.000	113		330050, 330064	330143, 330228, 330273	330243	
2.0 20V Turbo	(FA/175)	08/96-08/00	175 A3.000	162		330064	330082, 330121, 330143, 330228	330260, 330343	
CROMA			**12/85 -**						
1.8 16V	(194)	12/05-	939 A4.000	103		330081, 330517	330509		
1.9 D Multijet	(194)	06/05-	939 A7.000	85		330517			

OPS Oil Pressure Switches **BLS** Brake Light Switches **TT-RF** Temperature Transmitter and Radiator Fan Switches **RLS** Reverse Light Switches **VAR** Various

Vehicle		Date	Engine	kW	OPS	BLS	TT-RF	RLS	VAR
1.9 D Multijet	(194)	06/05-	939 A1.000	88		330081, 330517	330142		
	(194)	06/05-	939 A2.000	110		330081, 330517	330142		
1600	(154)	12/85-12/90	154 A.048	61	330000	330049	330145, 330273, 330275	330339	
1900 Turbo D i.d.	(154)	05/89-10/92	154 C6.000	66	330000	330521	330206, 330275, 330314	330339	
	(154)	11/92-12/96	154 D1.000	69	330000	330521	330206, 330275, 330290, 330314	330343	
2.2 16V	(194)	06/05-	194 A1.000	108		330081, 330517	330107		
2.4 D Multijet	(194)	06/05-	939 A3.000	147		330081, 330517	330142		
2000 16V	(154)	08/92-08/96	154 E1.000	101	330000	330521	330116, 330273	330343	
2000 CHT	(154)	12/85-02/89	154 A1.000	66	330000	330049	330145, 330273, 330275	330339	
	(154)	01/91-09/92	--	74	330000	330521	330145, 330206, 330273, 330275	330339	
2000 i.e.	(154)	03/86-09/90	834 B.048	83	330000	330049, 330336	330145, 330206, 330273, 330275	330339	
	(154)	10/87-08/96	154 C3.046, 834 B.146	85	330000	330521	330116, 330145, 330273	330343	
	(154)	03/87-09/92	154 C3.000, 834 B.000	88	330000	330521	330145, 330273	330339, 330343	
2000 i.e. Turbo	(154)	06/87-08/96	154 C4.046, 834 C.146	110	330000	330521	330116, 330145, 330275	330339, 330343	
	(154)	12/85-06/90	154 A2.000	114		330049, 330336	330116, 330145, 330206, 330273, 330275	330339	
2500 D	(154)	12/85-12/89	8144.67	55	330000	330049, 330336	330275, 330314	330339	
2500 TD	(154)	12/85-08/89	8144.91.2000	74	330000	330049, 330336	330275, 330314	330339	
	(154)	05/89-08/96	8144.97, 8144.97 Y	85	330000	330521	330116, 330120, 330275, 330314	330339, 330343	
2500 TDE	(154)	12/91-08/96	8144.97 S	77	330000	330521	330120, 330275		
2500 V6	(154)	06/93-08/96	834 G.000	119		330521	330116	330343	
DOBLO			**03/01 -**						
1.2	(119)	03/01-	223 A5.000	48		330346	330682, 330693	330243, 330518	
	Cargo (223)	03/01-	223 A5.000	48		330346	330682, 330693	330243, 330518	
1.3 D Multijet	Cargo (223)	10/05-	199 A2.000	55		330081, 330491, 330517		330243	
	(119)	10/05-	223 A9.000	62		330081, 330491, 330517		330243	
1.3 JTD	(119)	05/05-	199 A2.000	55		330081, 330491, 330517		330243	
1.3 JTD 16V	Cargo (223)	05/04-	188 A9.000	51		330081, 330491, 330517	330142	330243	
1.4	(119)	10/05-	350 A1.000	57		330346, 330491	330553	330258, 330518	
	Cargo (223)	10/05-	350 A1.000	57		330346, 330491	330553	330258, 330518	
1.6 16V	(119)	10/01-	182 B6.000	76		330491	330142	330258, 330518	
	Cargo (223)	10/01-	182 B6.000	76		330491	330142	330258, 330518	
1.6 Natural Power	(119)	09/02-	182 B6.000	76		330491	330142	330258, 330518	
	Cargo (223)	09/02-	182 B6.000	76		330491	330142	330258, 330518	

OPS Oil Pressure Switches **BLS** Brake Light Switches **TT-RF** Temperature Transmitter and Radiator Fan Switches **RLS** Reverse Light Switches **VAR** Various

ERA S.p.A. Moncalieri (TO) Italy - tel: +39 011 6891511 - fax: +39 011 6472862 - www.eranet.it

Vehicle		Date	Engine	kW	OPS	BLS	TT-RF	RLS	VAR
1.9 D	(119)	03/01-	223 A6.000	46		330346, 330491	330142	330243, 330518	
	Cargo (223)	03/01-	223 A6.000	46		330346, 330491	330142	330243, 330518	
1.9 D Multijet	(119)	10/05-	186 A9.000	88		330081, 330491, 330517	330142	330243	
1.9 JTD	(119)	10/01-	182 B9.000	74		330081, 330491	330142	330243, 330518	
	Cargo (223)	10/01-	182 B9.000	74			330142	330243, 330518	
	(119)	07/03-	223 A7.000	77		330081, 330491, 330517	330142	330243	
	Cargo (223)	07/03-	223 A7.000	77		330081, 330491, 330517	330142	330243	
DUCATO			**01/82 -**						
1.8	Box (280)	01/82-10/88	169 B	49		330032	330084	330689	
	Panorama (280)	07/82-12/88	--	51				330689	
1.9 D	Box (230L)	04/98-04/02	DJY	50	330023, 330026	330051, 330064	330109, 330279, 330639	330249, 330513	
	Bus (230)	04/98-04/02	D9B, DJY	50	330023, 330026	330051, 330064	330109, 330147, 330279, 330639	330249, 330513	
	Flatbed / Chassis (230)	04/98-04/02	DJY	50	330023, 330026	330051, 330064	330109, 330279, 330639	330249, 330513	
	Box (230L)	03/94-04/02	230 A2.000	51		330048, 330051	330120, 330279, 330314	330249	
	Flatbed / Chassis (230)	03/94-04/02	230 A2.000	51		330048, 330051	330120, 330279, 330314	330249	
	Box (280)	01/88-08/90	149 B1.000	52	330000	330032	330082, 330201		
	Box (290)	07/90-03/94	149 B1.000	52	330000	330032	330201, 330221, 330314	330236	
	Flatbed / Chassis (280)	01/88-08/90	149 B1.000	52	330000	330032	330082, 330201	330689	
	Panorama (280)	02/87-08/90	149 B1.000	52	330000	330032	330082, 330201	330689	
	Panorama (290)	07/90-03/94	149 B1.000	52	330000	330032	330201, 330221, 330314	330236	
1.9 D Combinato	Bus (230)	06/95-04/02	230 A2.000	51		330048, 330051	330120, 330279, 330314	330249	
1.9 TD	Box (230L)	03/94-04/02	230 A3.000	60		330048, 330051	330120, 330279, 330314	330249	
	Box (280)	03/89-08/90	280 A1.000	60	330000	330032	330201, 330314	330689	
	Box (290)	03/89-03/94	280 A1.000	60	330000	330032	330201, 330221, 330314	330236, 330689	
	Flatbed / Chassis (230)	03/94-04/02	230 A3.000	60		330048, 330051	330120, 330279, 330314	330249	
	Flatbed / Chassis (280)	03/89-08/90	280 A1.000	60	330000	330032	330201, 330314	330689	
	Flatbed / Chassis (290)	03/89-03/94	280 A1.000	60	330000	330032	330201, 330221, 330314	330236, 330689	
	Panorama (280)	03/89-08/90	280 A1.000	60	330000	330032	330201, 330314	330689	
	Panorama (290)	07/90-03/94	280 A1.000	60	330000	330032	330201, 330221, 330314	330236, 330689	
	Box (230L)	04/98-04/02	DHX (XUD9TF/L)	66	330023, 330026	330051	330109, 330147, 330279, 330575	330249	
	Bus (230)	04/98-04/02	DHX (XUD9TF/L)	66	330023, 330026	330051	330109, 330147, 330279, 330575	330249	
	Flatbed / Chassis (230)	04/98-04/02	DHX (XUD9TF/L)	66	330023, 330026	330051	330109, 330147, 330279, 330575	330249	

OPS Oil Pressure Switches **BLS** Brake Light Switches **TT-RF** Temperature Transmitter and Radiator Fan Switches **RLS** Reverse Light Switches **VAR** Various

Vehicle		Date	Engine	kW	OPS	BLS	TT-RF	RLS	VAR
1.9 TD CAT	Box (230L)	08/94-04/02	230 A4.000	59		330048, 330051	330120, 330279, 330290, 330314	330249	
	Flatbed / Chassis (230)	08/94-04/02	230 A4.000	59		330048, 330051	330120, 330279, 330290, 330314	330249	
1.9 TD Combinato	Bus (230)	08/94-04/02	230 A4.000	59		330048, 330051	330120, 330279, 330290, 330314	330249	
1.9 TD Panorama/ Combinato	Bus (230)	03/94-04/02	230 A3.000	60		330048, 330051	330120, 330279, 330314	330249	
100 Multijet 2,2 D	Box (250)	07/06-	4HV	74		330081, 330517		330513	
	Bus (250)	07/06-	4HV	74		330081, 330517		330513	
	Flatbed / Chassis (250)	07/06-	4HV	74		330081, 330517		330513	
120 Multijet 2,3 D	Box (250)	07/06-	F1AE0481D	88	330684	330081, 330517	330137	330513	
	Bus (250)	07/06-	F1AE0481D	88	330684	330081, 330517	330137	330513	
	Flatbed / Chassis (250)	07/06-	F1AE0481D	88	330684	330081, 330517	330137	330513	
130 Multijet 2,3 D	Box (250)	01/07-	F1AE3481D	96	330684	330517			
	Flatbed / Chassis (250)	01/07-	F1AE3481D	96	330684	330517			
140 Natural Power	Box (250)	04/09-	F1CE0441A	100			330137		
	Bus (250)	04/09-	F1CE0441A	100	330684	330517	330137		
160 Multijet 3,0 D	Box (250)	07/06-	F1CE3481M	116	330684	330081, 330517	330137		
	Bus (250)	07/06-	F1CE3481M	116	330684	330081, 330517	330137		
	Flatbed / Chassis (250)	07/06-	F1CE3481M	116	330684	330081, 330517	330137		
2.0	Box (280)	01/82-08/90	XN 1T	58		330032	330084	330689	
	Panorama (280)	07/82-05/85	XN 1T	58				330689	
	Panorama (290)	07/90-03/94	170 D	62		330032	330084, 330273	330236	
	Panorama (290)	06/90-05/94	170 D	63		330032	330084, 330273	330236	
	Box (230L)	06/94-12/95	--	74	330023, 330026	330048, 330050, 330064	330122, 330147, 330197, 330279, 330588	330249	
	Bus (230)	06/94-12/95	--	74	330023, 330026	330048, 330050, 330064	330122, 330147, 330197, 330279, 330588	330249	
	Box (230L)	03/94-04/02	RFW	80	330023, 330026	330048, 330050, 330064	330122, 330147, 330197, 330279, 330554, 330588	330249	
	Flatbed / Chassis (230)	06/98-04/02	RFW	80	330023, 330026	330048, 330050, 330064	330122, 330147, 330197, 330279, 330554, 330588	330249	
	Box (244)	04/02-	RFL	81	330026	330081, 330517	330551	330513, 330518	
	Bus (244, Z_)	04/02-	RFL	81	330026	330081, 330517	330551	330513, 330518	
2.0 4x4	Box (290)	06/90-05/94	170 D	63		330032	330086, 330273	330236	
	Box (230L)	11/94-11/01	RFW	80			330588		
	Bus (230)	11/94-11/01	RFW	80	330023, 330026	330048, 330050, 330064	330122, 330147, 330197, 330279, 330588	330249	
	Flatbed / Chassis (230)	06/98-04/02	RFW	80	330023, 330026	330048, 330050, 330064	330122, 330147, 330197, 330279, 330588	330249	
	Box (244)	05/02-07/06	RFL	81		330517			

OPS Oil Pressure Switches **BLS** Brake Light Switches **TT-RF** Temperature Transmitter and Radiator Fan Switches **RLS** Reverse Light Switches **VAR** Various

ERA S.p.A. Moncalieri (TO) Italy - tel: +39 011 6891511 - fax: +39 011 6472862 - www.eranet.it

Vehicle		Date	Engine	kW	OPS	BLS	TT-RF	RLS	VAR
2.0 4x4	Bus (244, Z_)	05/02-07/06	RFL	81		330517			
2.0 Bipower	Box (244)	11/02-	RFL	81		330517			
	Bus (244, Z_)	11/02-	RFL	81		330517			
2.0 JTD	Box (230L)	10/01-04/02	RHV (DW10)	62	330026	330517		330513, 330518	
	Box (244)	04/02-	RHV (DW10)	62	330026	330081, 330517	330742	330513, 330518	
	Bus (230)	10/01-04/02	RHV (DW10)	62	330026	330517		330513, 330518	
	Bus (244, Z_)	04/02-	RHV (DW10)	62	330026	330081, 330517	330742	330513, 330518	
	Flatbed / Chassis (244)	04/02-	RHV (DW10)	62	330026	330081, 330517	330742	330513, 330518	
2.0 Panorama/Combinato	Bus (230)	03/94-04/02	RFW	80	330023, 330026	330048, 330050, 330064	330122, 330147, 330197, 330279, 330554, 330588	330249	
2.3 JTD	Box (244)	04/02-	F1AE0481C	81	330684	330081, 330517	330137, 330148	330513, 330518	
	Bus (244, Z_)	04/02-	F1AE0481C	81	330684	330081, 330517	330137, 330148	330513, 330518	
	Flatbed / Chassis (244)	04/02-	F1AE0481C	81	330684	330081, 330517	330137, 330148	330513, 330518	
2.5 D	Box (280)	01/82-08/90	8144.67, CRD93L (U25-661)	55				330689	
	Box (290)	06/90-05/94	8144.67	55	330000	330032	330082, 330201, 330221	330236, 330689	
	Flatbed / Chassis (280)	07/82-08/90	8144.67, CRD93L (U25-661)	55				330689	
	Flatbed / Chassis (290)	07/90-03/94	8144.67	55				330689	
	Panorama (280)	01/86-08/90	8144.67, CRD93L (U25-661)	55	330345	330032	330201, 330531	330689	
	Panorama (290)	07/90-03/94	8144.67	55	330000	330032	330082, 330201, 330221	330236, 330689	
	Box (230L)	03/94-04/02	8140.67	62		330048, 330051	330148, 330279	330249	
	Flatbed / Chassis (230)	03/94-04/02	8140.67	62		330048, 330051	330148, 330279	330249	
2.5 D 4x4	Box (280)	03/89-08/90	8144.67	55				330689	
	Box (290)	07/90-03/94	8144.67	55	330000	330032	330082, 330201, 330221	330236, 330689	
	Flatbed / Chassis (280)	03/89-08/90	8144.67	55				330689	
	Flatbed / Chassis (290)	07/90-03/94	8144.67	55				330689	
	Panorama (280)	01/87-08/90	8144.67	55				330689	
	Panorama (290)	07/90-03/94	8144.67	55	330000	330032	330082, 330201, 330221	330236, 330689	
	Flatbed / Chassis (230)	03/94-04/02	8140.67	62		330048, 330051	330148, 330279	330249	
2.5 D Combinato	Bus (230)	08/94-04/02	8140.67	62		330048, 330051	330148, 330279	330249	
2.5 TD	Box (290)	07/90-03/94	8140.27	70	330000	330032	330082, 330201, 330221	330236	
	Panorama (290)	08/90-03/94	8140.27	70	330000	330032	330082, 330201, 330221	330236	
2.5 TD 4x4	Box (290)	07/90-03/94	8140.27	70	330000	330032	330082, 330201, 330221	330236	
	Panorama (290)	01/91-03/94	8140.27	70	330000	330032	330082, 330201, 330221	330236	
	Panorama (290)	06/90-05/94	8140.27	70	330000	330032	330082, 330201, 330221	330236	
	Flatbed / Chassis (230)	11/94-04/98	8140.47	80			330120		

OPS Oil Pressure Switches **BLS** Brake Light Switches **TT-RF** Temperature Transmitter and Radiator Fan Switches **RLS** Reverse Light Switches **VAR** Various

Vehicle		Date	Engine	kW	OPS	BLS	TT-RF	RLS	VAR
2.5 TDI	Box (230L)	03/94-04/02	8140.47R	80		330048	330120, 330148, 330279	330249	
	Flatbed / Chassis (230)	03/94-04/02	8140.47R	80		330048	330120, 330148, 330279	330249	
	Flatbed / Chassis (230)	03/94-04/02	8140.47	85		330048, 330051	330120, 330148, 330279	330249	
2.5 TDI 4x4	Box (230L)	05/98-04/02	8140.47	85		330048, 330051	330120, 330148, 330279	330249	
	Bus (230)	04/97-04/02	8140.47	85		330048, 330051	330120, 330148, 330279	330249	
	Flatbed / Chassis (230)	06/98-04/02	8140.47	85		330048, 330051	330148, 330279	330249	
2.5 TDI Combinato	Bus (230)	08/94-04/02	8140.47R	80		330048	330120, 330148, 330279	330249	
2.5 TDI Maxi	Box (230L)	03/94-04/02	8140.47	85		330048, 330051	330120, 330148, 330279	330249	
2.5 TDI Panorama/ Combinato	Bus (230)	07/94-04/02	8140.47R	80		330048	330120, 330148, 330279	330249	
	Bus (230)	03/94-04/02	8140.47	85		330048, 330051	330120, 330148, 330279	330249	
2.8 D	Box (230L)	05/98-04/02	8140.63	64		330051, 330064	330120, 330148, 330279	330249	
	Bus (230)	02/98-04/02	8140.63	64		330051, 330064	330120, 330148, 330279	330249	
	Flatbed / Chassis (230)	02/98-04/02	8140.63	64		330051, 330064	330120, 330148, 330279	330249	
2.8 D 4x4	Box (230L)	08/98-04/02	8140.63	64		330051, 330064	330120, 330148, 330279	330249	
2.8 iDTD 4x4	Flatbed / Chassis (230)	05/98-09/01	8140.43	90		330051, 330064	330120, 330148, 330279, 330295	330249	
2.8 JTD	Flatbed / Chassis (244)	11/03-07/06	8140.43	90		330517	330120		
	Flatbed / Chassis (230)	03/01-11/01	8140.43S	93		330064, 330081, 330517, 330519	330137, 330148	330513, 330518	
	Box (230L)	11/00-04/02	8140.43S	94		330064, 330081, 330517, 330519	330137, 330148	330513, 330518	
	Box (244)	04/02-	8140.43S	94		330064, 330081, 330517, 330519	330137, 330148	330513, 330518	
	Bus (230)	11/00-04/02	8140.43S	94		330064, 330081, 330517, 330519	330137, 330148	330513, 330518	
	Bus (244, Z_)	04/02-	8140.43S	94		330064, 330081, 330517, 330519	330137, 330148	330513, 330518	
	Flatbed / Chassis (230)	11/00-04/02	8140.43S	94		330064, 330081, 330517, 330519	330137, 330148	330513, 330518	
	Flatbed / Chassis (244)	04/02-	8140.43S	94		330064, 330081, 330517, 330519	330137, 330148	330513, 330518	
2.8 JTD 4x4	Flatbed / Chassis (244)	11/03-07/06	8140.43	90		330517			
	Box (230L)	11/00-04/02	8140.43S	94		330064, 330081, 330517, 330519	330137, 330148	330513, 330518	
	Box (244)	07/02-	8140.43S	94		330081, 330517	330137, 330148	330513, 330518, 330681	
	Bus (230)	11/00-04/02	8140.43S	94		330064, 330081, 330517, 330519	330137, 330148	330513, 330518	
	Bus (244, Z_)	07/02-	8140.43S	94		330081, 330517	330137, 330148	330513, 330518, 330681	
	Flatbed / Chassis (244)	10/02-	8140.43S	94		330081, 330517	330137, 330148	330513, 330518, 330681	

OPS Oil Pressure Switches **BLS** Brake Light Switches **TT-RF** Temperature Transmitter and Radiator Fan Switches **RLS** Reverse Light Switches **VAR** Various

ERA S.p.A. Moncalieri (TO) Italy - tel: +39 011 6891511 - fax: +39 011 6472862 - www.eranet.it

Vehicle		Date	Engine	kW	OPS	BLS	TT-RF	RLS	VAR
2.8 TD	Box (244)	11/03-07/06	8140.43	90		330081, 330517	330120, 330148, 330295	330513, 330518	
	Bus (244, Z_)	11/03-07/06	8140.43	90		330517	330120		
2.8 TD 4x4	Flatbed / Chassis (230)	05/98-11/01	8140.63	64			330120		
	Box (244)	11/03-07/06	8140.43	90		330081, 330517	330120, 330148, 330295	330513, 330518	
	Bus (244, Z_)	11/03-07/06	8140.43	90		330517	330120		
2.8 TDI	Box (230L)	10/97-04/02	8140.43	90		330051, 330064	330120, 330148, 330279, 330295	330249	
	Bus (230)	10/97-04/02	8140.43	90		330051, 330064	330120, 330148, 330279, 330295	330249	
	Flatbed / Chassis (230)	12/98-04/02	8140.43	90		330051, 330064	330120, 330148, 330279, 330295	330249	
2.8 TDI 4x4	Box (230L)	06/99-04/02	8140.43	90		330051, 330064	330120, 330148, 330279, 330295	330249	
	Bus (230)	07/99-04/02	8140.43	90		330051, 330064	330120, 330148, 330279, 330295	330249	
DUNA			**01/87 - 12/91**						
60 1.1	(146 B)	01/87-12/91	146 A6.000	43	330000	330032, 330048, 330049, 330336	330082, 330273	330241	
	Weekend (146 B)	01/87-12/91	146 A6.000	43	330000	330032, 330048, 330049, 330336	330082, 330273	330241	
70 1.3	(146 B)	01/87-12/91	146 A5.000	49	330000	330032, 330048, 330049, 330336	330082, 330273	330241	
	Weekend (146 B)	01/87-12/91	146 A5.000	49	330000	330032, 330048, 330049, 330336	330082, 330273	330241	
DS 1.7	(146 B)	01/87-12/91	149 B3.000	44	330000	330032, 330048	330082, 330202	330241	
	Weekend (146 B)	01/87-12/91	149 B3.000	44	330000	330032, 330048	330082, 330202	330241	
ELBA			**04/86 - 08/97**						
1.3	(146_)	04/91-02/95	146 A5.000	49		330048	330082, 330273	330241	
1.4	(146_)	10/93-02/95	146 D5.000	49		330048	330082, 330116, 330228	330243	
1.5	(146_)	01/92-12/96	149 C1.000	55		330048	330082, 330116, 330228	330241	
1.7 D	(146_)	04/89-12/96	146 B2.000	43		330048	330082, 330202	330241, 330243	
FIORINO			**10/77 -**						
1.0	(147)	01/80-12/87	127 A.000	37	330000	330032	330291	330338	
1.0 iE	Box (146 Uno)	11/92-04/96	156 A2.246	33	330000	330050, 330051	330082, 330102, 330116, 330156, 330273	330241, 330258	
1.3 D Multijet	Box Body / Estate (225)	02/08-	199 A9.000	55		330721, 330736			
1.3 Diesel	(147)	03/82-12/87	127 A5.000	33		330032	330082, 330291	330338	
1.4	Box Body / Estate (225)	02/08-	KFT	54		330721, 330736	330624		
1.5	(147)	01/88-08/93	149 C1.000	55	330000	330032, 330048	330082, 330116, 330273	330241	
1.5 iE	Box (146 Uno)	01/88-10/92	149 C1.000	55	330000	330032, 330048	330082, 330116, 330273	330241	
1.7 D	Box (146 Uno)	01/88-10/99	146 B2.000	44	330000	330032, 330048	330082, 330202	330241, 330243	
1.7 Diesel	(147)	12/87-12/90	149 B3.000	44	330000	330032, 330048	330082, 330202	330241	

OPS Oil Pressure Switches **BLS** Brake Light Switches **TT-RF** Temperature Transmitter and Radiator Fan Switches **RLS** Reverse Light Switches **VAR** Various

Vehicle		Date	Engine	kW	OPS	BLS	TT-RF	RLS	VAR
1.7 TD	Box (146 Uno)	11/96-05/00	146 D7.000	46		330032, 330048	330082, 330202, 330641	330243	
1050	(127)	01/80-12/87	127 A.000	37	330000	330032	330291	330338	
60 1.1	Box (146 Uno)	05/88-12/93	146 A9.000	40	330000	330032, 330048	330156, 330273	330241	
60 1.7 D	Box (146 Uno)	05/88-10/96	146 B2.000	42	330000	330032, 330048	330082, 330202	330241, 330243	
	Box (146 Uno)	05/88-05/00	149 B3.000	44	330000	330032, 330048	330082, 330202	330241	
65 1.7 TD	Box (146 Uno)	01/97-05/01	146 D7.000	46		330032, 330048	330082, 330202, 330641	330243	
70 1.3	Box (146 Uno)	01/88-12/94	146 A5.000	49		330032, 330048	330156, 330273	330241	
70 i.e. 1.4	Box (146 Uno)	05/94-05/01	146 C5.000, 146 D5.000	49		330032, 330048	330082, 330116, 330228, 330273	330241, 330243	
75 i.e. 1.5	Box (146 Uno)	05/88-12/93	149 C1.000	55	330000	330032, 330048	330082, 330116, 330273	330241	
75 i.e. 1.6	Box (146 Uno)	10/93-05/01	146 C6.000, 146 D6.000	55		330032, 330048	330082, 330116, 330228	330243	
900	(127)	10/77-12/84	100 GL.000	33	330000	330032	330156, 330291	330338	
FIORINO Pick up			**10/82 - 05/01**						
1.3	(146)	01/88-12/94	146 A5.000	49		330032, 330048	330156, 330273	330241	
1.3 D	(147)	05/84-12/88	127 A5.000	33		330032, 330048	330082, 330202	330241	
1.7 D	(146)	10/93-10/99	146 B2.000	42	330000	330032, 330048	330082, 330202	330241, 330243	
	(146)	05/88-10/99	149 B3.000	44	330000	330032, 330048	330082, 330202	330241	
1.7 TD	(146)	01/97-05/01	146 D7.000	46		330032, 330048	330082, 330202, 330641	330243	
GRANDE PUNTO			**10/05 -**						
1.2	(199)	10/05-	199 A4.000	48		330720, 330721	330553	330258	
1.3 D Multijet	(199)	10/05-	199 A2.000	55		330720, 330721	330142	330243	
	(199)	10/05-	199 A3.000	66		330720, 330721	330142	330243	
1.4	(199)	10/05-	350 A1.000	57		330720, 330721	330553	330258	
1.4 16V	(199)	10/05-	199 A6.000	70		330720, 330721	330553	330258	
1.4 Abarth	(199)	12/07-	199 A8.000	114		330721	330553		
	(199)	12/07-	199 A8.000, 955 A8.000	132		330721			
1.4 T-Jet	(199)	09/07-	198 A4.000	88		330721	330553	330243	
1.9 D Multijet	(199)	10/05-	939 A1.000	88		330720, 330721	330142		
	(199)	10/05-	199 A5.000	96		330720, 330721	330142		
IDEA			**12/03 -**						
1.2 16V		01/04-	188 A5.000	59		330081, 330517	330142	330258	
1.3 D Multijet		10/05-	199 A3.000	66		330081, 330517		330243	
1.3 JTD		01/04-	188 A9.000	51		330081, 330517		330243	
1.4		10/05-	350 A1.000	57		330081, 330517	330553	330258	
		12/03-	192 B2.000	66		330081, 330517	330142, 330553	330258	
1.4 16V		01/04-	843 A1.000	70		330081, 330517	330142, 330553	330258	
1.9 JTD		01/04-	188 B2.000	74		330081, 330517	330142	330244	

OPS Oil Pressure Switches **BLS** Brake Light Switches **TT-RF** Temperature Transmitter and Radiator Fan Switches **RLS** Reverse Light Switches **VAR** Various

ERA S.p.A. Moncalieri (TO) Italy - tel: +39 011 6891511 - fax: +39 011 6472862 - www.eranet.it

Vehicle		Date	Engine	kW	OPS	BLS	TT-RF	RLS	VAR
LINEA		**06/07 -**							
1.3 D Multijet	(323)	06/07-	199 A3.000	66		330081, 330492, 330517	330495	330243	
1.4	(323)	06/07-	350 A1.000	57		330081, 330492, 330517	330553	330258	
1.4 T-Jet	(323)	09/07-	198 A4.000	88		330081, 330517	330553	330243	
1.6 D Multijet	(323)	06/09-	198 A3.000	77		330517			
MAREA		**09/96 -**							
1.2 16V	(185)	10/98-	182 B2.000	60				330258, 330515	
	Weekend (185)	10/98-	182 B2.000	60				330258, 330515	
1.4 80 12V	(185)	09/96-	182 A3.000	59			330082, 330116, 330293, 330295	330258, 330515	
	Weekend (185)	09/96-	182 A3.000	59			330082, 330116, 330293, 330295	330258, 330515	
1.6	Weekend (185)	09/00-08/02	182 B6.000	76			330495	330243, 330258, 330515	
1.6 100 16V	(185)	09/96-	182 A4.000	76			330082, 330143, 330293, 330295, 330555	330243, 330515	
	Weekend (185)	09/96-	182 A4.000	76			330082, 330143, 330293, 330295, 330555	330243, 330515	
1.6 100 16V Bipower	(185)	04/99-	185 A3.000, 186 A4.000	76			330082, 330293, 330295, 330555, 330561	330243, 330515	
1.6 SX	(185)	09/00-08/02	182 B5.098	72			330082, 330293, 330295, 330555	330243, 330515	
1.8 115 16V	(185)	09/96-	182 A2.000	83			330082, 330121, 330143, 330293, 330295	330243, 330515	
	Weekend (185)	09/96-	182 A2.000	83			330082, 330121, 330143, 330293, 330295	330243, 330515	
1.9 JTD 105	(185)	04/99-01/01	182 B4.000	77		330050	330137, 330143	330243, 330515	
	Weekend (185)	04/99-	182 B4.000	77		330050	330137, 330143	330243, 330515	
1.9 JTD 110	(185)	01/01-	186 A6.000	81		330050	330495	330243, 330515	
	Weekend (185)	01/01-	186 A6.000	81		330050	330495	330243, 330515	
1.9 TD 100	(185)	09/96-	182 A7.000	74		330050	330082, 330121, 330279, 330295	330243, 330515	
	Weekend (185)	09/96-	182 A7.000	74		330050	330082, 330121, 330279, 330295	330243, 330515	
1.9 TD 75	(185)	09/96-	182 A8.000	55		330050	330082, 330120, 330295, 330641	330243, 330515	
	Weekend (185)	09/96-	182 A8.000	55		330050	330082, 330295, 330641	330243, 330515	
2.0 150 20V	(185)	09/96-04/99	182 A1.000	108			330082, 330116, 330293, 330295	330243, 330515	
	Weekend (185)	09/96-04/99	182 A1.000	108			330082, 330116, 330293, 330295	330243, 330515	
	(185)	01/01-	185 A8.000	110		330050	330495	330243, 330515	
	Weekend (185)	01/01-	185 A8.000	110		330050	330495	330243, 330515	

OPS Oil Pressure Switches **BLS** Brake Light Switches **TT-RF** Temperature Transmitter and Radiator Fan Switches **RLS** Reverse Light Switches **VAR** Various

Vehicle		Date	Engine	kW	OPS	BLS	TT-RF	RLS	VAR
2.0 155 20V	(185)	04/99-01/01	182 B7.000	113		330050	330143	330243, 330515	
	Weekend (185)	04/99-01/01	182 B7.000	113		330050	330120, 330143	330243, 330515	
2.4 JTD 130	(185)	04/99-	185 A6.000, 839 A5.000	96		330050	330137, 330143, 330279, 330561	330260, 330515	
	Weekend (185)	04/99-	185 A6.000, 839 A5.000	96		330050	330137, 330143, 330279, 330561	330260, 330515	
2.4 TD 125	(185)	09/96-04/99	185 A2.000	91		330051	330082, 330121, 330143, 330279, 330295	330260, 330515	
	Weekend (185)	09/96-04/99	185 A2.000	91		330051	330082, 330121, 330143, 330279, 330295	330260, 330515	
MULTIPLA			**04/99 -**						
1.6	(186)	05/04-08/05	182 B6.000	68		330064, 330081, 330517	330495	330243	
1.6	(186)	03/01-08/05	182 B6.000	74		330064, 330081, 330517	330495	330243	
	(186)	09/00-	182 B6.000	76		330517			
1.6 100 16V	(186)	04/99-	182 A4.000	76		330064, 330081, 330517	330561	330243	
1.6 16V	(186)	04/02-	182 B6.000	70		330064, 330081, 330517	330495	330243	
1.6 16V Bipower	(186)	04/99-	186 A4.000	76		330064, 330081, 330517	330561	330243	
	(186)	10/01-	182 B6.000	76		330064, 330081, 330517	330495	330243	
1.6 16V Blupower	(186)	04/99-	186 A3.000	70		330064, 330081, 330517	330495, 330561	330243	
1.9 JTD	(186)	04/02-	186 A9.000	88		330064, 330081, 330517, 330520, 330618	330495	330243	
1.9 JTD 105	(186)	04/99-	182 B4.000	77		330064, 330081, 330517, 330520, 330618	330137, 330143	330243	
1.9 JTD 110	(186)	03/01-07/02	186 A6.000	81		330064, 330081, 330517, 330520, 330618	330495	330243	
1.9 JTD 115	(186)	07/02-	186 A8.000	85		330064, 330081, 330517, 330520, 330618	330495	330243	
PALIO			**04/96 -**						
1.2	(178BX)	07/97-08/02	178 B7.045, 188 A4.000	44		330064, 330492	330082, 330228, 330273, 330279, 330559	330243, 330258, 330515	
	Weekend (178DX)	02/01-	188 A4.000	44		330064, 330492	330279	330258	
	(178BX)	06/99-10/00	178 E2.000	50		330064	330082, 330124, 330156, 330228, 330273, 330560	330243	
	(178BX)	06/98-	176 A8.000, 178 E2.000	54		330064	330082, 330124, 330156, 330228, 330273, 330560	330243	
	Weekend (178DX)	04/96-02/01	178 B5.000	54		330064	330082, 330124, 330156, 330228, 330273, 330560	330243, 330258, 330515	

OPS Oil Pressure Switches **BLS** Brake Light Switches **TT-RF** Temperature Transmitter and Radiator Fan Switches **RLS** Reverse Light Switches **VAR** Various

ERA S.p.A. Moncalieri (TO) Italy - tel: +39 011 6891511 - fax: +39 011 6472862 - www.eranet.it

Vehicle		Date	Engine	kW	OPS	BLS	TT-RF	RLS	VAR
1.2	(178BX)	09/01-	188 A5.000	59		330064, 330492	330142, 330279	330258	
	Weekend (178DX)	09/01-	188 A5.000	59		330064, 330492	330142, 330279	330258	
1.3	(178BX)	06/03-	--	53		330517			
1.3 JTD Multijet	(178BX)	06/03-	188 A9.000	51		330064, 330081, 330492, 330517		330243	
1.4	(178BX)	04/96-	178 B2.000	51		330064	330082, 330228, 330273	330243, 330258, 330515	
	Weekend (178DX)	07/97-08/01	178 B2.000	51		330064	330082, 330228, 330273	330243, 330258, 330515	
	(178BX)	10/05-	--	57		330517	330693		
	(178BX)	06/03-	834 A1.000	70		330517			
1.4 CAT	(178BX)	04/96-	178 B2.016	51		330064	330082, 330228, 330273	330243, 330258, 330515	
1.5	(178BX)	06/04-	178 E5.022	62		330064	330142	330243	
	Weekend (178DX)	02/02-	178 E5.022	62		330064	330142	330243	
1.6	(178BX)	07/97-10/00	178 D2..011	68		330064, 330492	330082, 330143, 330228, 330273	330243, 330258, 330515	
	Weekend (178DX)	07/97-10/03	178 C7.098, 178 D2..011	68		330064, 330492	330082, 330143, 330228, 330273, 330555	330243, 330258, 330515	
	Weekend (178DX)	07/97-	178 C7.098	70		330064	330082, 330143, 330228, 330273, 330555	330243, 330515	
1.6 16V	(178BX)	04/96-	178 B3.000	74		330064	330082, 330143, 330228, 330273, 330555	330243, 330258, 330515	
	Weekend (178DX)	04/96-02/01	178 B3.000	74		330064	330082, 330143, 330228, 330273, 330555	330243, 330258, 330515	
	Weekend (178DX)	02/01-	182 B6.000	76		330064, 330492	330142, 330495	330258	
1.7 TD	Weekend (178DX)	04/96-03/01	176 A3.000	51		330064, 330081, 330492, 330517	330228, 330641	330243, 330258	
1.9 D	(178BX)	09/00-	223 A6.000	46		330064, 330492	330495	330258	
	Weekend (178DX)	03/01-	223 A6.000	46		330064, 330492	330495	330258	
1.9 JTD	Weekend (178DX)	09/01-	188 A2.000	59		330064, 330492	330142	330243	
PANDA			**03/80 -**						
1.1	(169)	09/03-	187 A1.000	40		330081, 330517, 330520, 330735	330120, 330693	330258, 330518	
	Van (141_)	09/00-02/04	187 A1.000	40		330517, 330735	330693		
1.1 AWD	Van (141_)	09/00-02/04	187 A1.000	40		330517, 330735	330693		
1.2	(169)	09/03-	188 A4.000	44		330081, 330517, 330520, 330735	330693	330258, 330518	
	Van (169)	09/04-	188 A4.000	44		330081, 330517, 330520, 330735	330693	330258, 330518	
1.2 4x4	(169)	10/04-	188 A4.000	44		330081, 330517, 330520, 330735	330693	330258, 330518	
	Van (169)	09/04-	188 A4.000	44		330081, 330517, 330520, 330735	330693	330258, 330518	
1.2 Bi-Power / Natural Power	(169)	01/07-	188 A4.000	44		330081, 330517, 330520, 330735	330693	330258, 330518	
1.2 LPG	(169)	04/09-	188 A4.000	44		330517, 330735	330693		

OPS Oil Pressure Switches **BLS** Brake Light Switches **TT-RF** Temperature Transmitter and Radiator Fan Switches **RLS** Reverse Light Switches **VAR** Various

Vehicle		Date	Engine	kW	OPS	BLS	TT-RF	RLS	VAR
1.3 D Multijet	(169)	09/03-	188 A9.000	51		330081, 330517, 330520, 330735	330142	330258, 330518	
	(169)	06/06-	169 A1.000	55		330517, 330735			
1.3 D Multijet 4x4	(169)	10/04-	188 A9.000	51		330081, 330517, 330520, 330735	330142	330258, 330518	
1.3 JTD	Van (169)	03/04-	188 A9.000	51		330517, 330735			
	Van (169)	01/06-	169 A1.000	55		330517, 330735			
1.4	(169)	10/06-	169 A3.000	74		330081, 330517, 330520, 330735		330258, 330518	
1000	(141A_)	01/86-04/92	156 A2.100	32	330000	330032	330082, 330156, 330273	330241	
	Van (141_)	01/86-02/92	156 A2.100, 156 A3.100	32	330000	330032	330102, 330273	330241	
	(141A_)	01/85-12/92	156 A3.000	37	330000	330032	330102, 330273	330241	
1000 4x4	(141A_)	01/86-07/89	156 A2.100, 156 A3.100	32	330000	330032	330102, 330273	330241	
	(141A_)	05/86-12/94	141 C2.000, 156 A2.246	33	330000	330032	330102, 330116, 330273	330241	
	(141A_)	01/86-12/92	156 A3.000	37	330000	330032	330102, 330273	330241	
1000 i.e	Van (141_)	08/92-02/04	156 A2.246	33	330000	330032	330082, 330116, 330156, 330273	330241	
1000 i.e. CAT	(141A_)	10/87-08/98	141 C2.000, 156 A2.246	33	330000	330032	330082, 330102, 330116, 330120, 330156, 330273	330241	
1100	(141A_)	05/91-12/99	156 C.046	37	330000	330032	330082, 330116, 330120, 330156, 330273	330241	
	(141A_)	02/95-09/03	176 B2.000, 187 A1.000	40		330032, 330064	330082, 330120, 330156, 330273, 330682, 330693	330241	
1100 4x4	(141A_)	02/95-07/04	176 B2.000	40		330032	330120, 330156, 330206	330241	
1100 Trekking 4x4	(141A_)	10/91-07/04	156 C.046	37	330000	330032	330116, 330120, 330156, 330206	330241	
1300 D	(141A_)	04/86-12/92	156 A5.000	27		330032	330156, 330206	330241	
650	(141A_)	01/82-07/04	141 A.000	22	330001	330032			
	(141A_)	01/82-07/04	--	22	330001	330032			
750	(141A_)	01/86-01/95	156 A4.000	25	330000	330032	330082, 330102, 330156, 330273	330241	
	(141A_)	01/95-12/97	156 A4.048	25	330000	330032	330082, 330156, 330273	330241	
	(141A_)	01/86-01/95	141 B.000	25	330001	330032	330082, 330156, 330273	330241	
	Van (141_)	01/86-07/92	141 B.000	25	330001	330032	330082, 330156, 330273	330241	
800	(141A_)	02/81-12/85	--	25	330001	330032	330156, 330483		
900	(141A_)	04/92-12/96	1170 A1.046	29		330032	330082, 330120, 330156, 330273	330241	
	(141A_)	10/80-06/94	100 GL3.000, 146 A.000	33	330001	330032	330156, 330483		
950	(141A_)	09/82-08/83	A 112 B1.054	35	330001	330032	330082, 330483		
950 4x4	(141A_)	09/83-12/86	A 112 B1.054	35	330001	330032	330082, 330483		

OPS Oil Pressure Switches **BLS** Brake Light Switches **TT-RF** Temperature Transmitter and Radiator Fan Switches **RLS** Reverse Light Switches **VAR** Various

ERA S.p.A. Moncalieri (TO) Italy - tel: +39 011 6891511 - fax: +39 011 6472862 - www.eranet.it

Vehicle		Date	Engine	kW	OPS	BLS	TT-RF	RLS	VAR
PUNTO			**09/93 -**						
1.1	Van (176L)	04/96-02/00	176 B2.000	40			330156, 330293	330258, 330515	
1.2 16V 80	(188)	09/99-	188 A5.000	59		330346, 330491	330142	330258	
1.2 60	(188)	09/99-	188 A4.000	44		330081, 330346, 330517	330682, 330693	330258, 330518	
	Van (188AX)	02/00-	188 A4.000	44		330081, 330346, 330517	330682, 330693	330258, 330518	
1.2 Natural Power	(188)	09/03-	188 A4.000	44		330081, 330514, 330517	330682, 330693	330258, 330518	
1.3 JTD	Van (188AX)	06/03-10/05	188 A9.000	51		330081, 330514, 330517	330142	330243	
1.3 JTD 16V	(188)	06/03-	188 A9.000	51		330081, 330514, 330517	330142	330243	
1.4	(188)	09/03-	843 A1.000	70		330081, 330514, 330517	330142, 330553	330258	
1.4 GT Turbo	(176)	09/96-09/99	176 B6.000	96		330064	330082, 330116, 330279	330243, 330515	
	(176)	01/94-09/96	176 A4.000	98		330064	330082, 330116, 330279	330243, 330515	
1.7 D	(176)	04/94-09/97	176 B3.000	42		330064	330082, 330156, 330279, 330641	330258, 330515	
	Van (176L)	04/96-02/00	176 B3.000	42		330064	330082, 330156, 330279, 330641	330258, 330515	
1.7 TD	(176)	01/94-09/99	176 A3.000	51		330064	330082, 330279, 330641	330243, 330515	
	(176)	01/94-09/99	176 A5.000	52		330064	330082, 330156, 330279, 330641	330243, 330515	
	Van (176L)	04/96-02/00	176 A5.000	52		330064	330082, 330156, 330279, 330641	330243, 330515	
1.8 130 HGT	(188)	09/99-	183 A1.000, 188 A6.000	96		330346	330143	330243, 330518	
1.9 D 60	Van (188AX)	02/00-	188 A3.000	44		330346, 330491	330142	330243	
1.9 DS 60	(188)	09/99-	188 A3.000	44		330346, 330491	330142	330243	
1.9 JTD	(188)	10/01-	188 A7.000	63		330081, 330514, 330517	330142	330243, 330518	
	Van (188AX)	02/00-	188 A7.000	63		330081, 330514, 330517	330142	330243, 330518	
	(188)	06/03-	188 B2.000	74		330081, 330514, 330517	330142	330244	
1.9 JTD 80	(188)	09/99-	188 A2.000	59		330346, 330491	330142	330243	
55 1.1	(176)	09/93-09/99	176 A6.000, 176 B2.000	40			330082, 330156, 330293, 330314	330258, 330515	
60 1.2	(176)	01/94-09/99	176 A7.000	43		330064	330082, 330156, 330293, 330314	330258, 330515	
	Convertible (176C)	04/94-06/00	176 A7.000	43		330064	330156, 330293	330258, 330515	
	(176)	03/94-09/99	176 B1.000, 176 B4.000	44		330064	330082, 330156, 330221, 330293, 330295, 330314	330258, 330515	
	Convertible (176C)	05/95-06/00	176 B1.000, 176 B4.000	44		330064	330082, 330156, 330221, 330293, 330295	330258, 330515	
60 TD 1.7	(176)	09/96-09/99	176 B7.000	46		330064	330082, 330156, 330279, 330641	330243, 330515	

FIAT

OPS Oil Pressure Switches **BLS** Brake Light Switches **TT-RF** Temperature Transmitter and Radiator Fan Switches **RLS** Reverse Light Switches **VAR** Various

Vehicle		Date	Engine	kW	OPS	BLS	TT-RF	RLS	VAR
75 1.2	(176)	10/93-09/99	176 A8.000	54		330064	330082, 330124, 330156, 330293, 330295, 330314, 330559	330258, 330515	
85 16V 1.2	(176)	04/97-09/99	176 B9.000	63		330064	330082, 330143, 330293, 330295	330258, 330515	
	Convertible (176C)	04/97-06/00	176 B9.000	63		330064	330082, 330143, 330293, 330295	330258, 330515	
90 1.6	(176)	01/94-04/97	176 A9.000	65		330064	330082, 330107, 330293, 330295	330258, 330515	
	Convertible (176C)	04/94-04/97	176 A9.000	65		330064	330082, 330107, 330293, 330295	330258, 330515	
QUBO			**09/08 -**						
1.3 D Multijet		09/08-	199 A2.000	55		330721, 330736			
1.4		09/08-	KFT	54		330721, 330736	330624		
1.4 Natural Power		10/09-	350 A1.000	57		330721, 330736			
REGATA			**09/83 - 06/91**						
100 Super 1.6	(138)	10/83-12/90	149 A2.000, 149 A4.000	74	330000	330032, 330336	330082, 330179	330241	
60 Diesel 1.7	(138)	05/85-03/89	149 B3.000	44	330000	330032, 330048	330082, 330202	330241	
	Weekend	01/84-12/89	149 B3.000	44	330000	330032, 330048	330082, 330202	330241	
65 Diesel 1.9	(138)	04/84-07/89	149 A1.000	48	330000	330032, 330336	330082, 330200	330241, 330335	
	Weekend	04/84-07/89	149 A1.000	48	330000	330032, 330336	330082, 330200	330241, 330335	
70 1.3	(138)	09/83-07/89	149 A3.000, 149 A7.000	48	330000	330032, 330049, 330336	330082, 330483	330243, 330335	
	(138)	09/83-07/86	138 B2.000	50	330000	330032, 330049, 330336	330082, 330483	330243, 330335	
	Weekend	01/84-07/89	138 B2.000	50	330000	330032, 330049, 330336	330082, 330483	330243, 330335	
80 Turbo Diesel 1.9	(138)	05/86-07/89	831 D1.000	59	330000	330336	330082, 330200	330241, 330335	
	Weekend	05/86-07/89	831 D1.000	59	330000	330336	330082, 330200	330241, 330335	
85 1.5	(138)	05/85-12/87	149 A5.000	58	330000	330032, 330049	330082, 330273	330241	
RITMO			**01/78 - 12/88**						
100 1.6	II (138A)	01/83-12/87	149 A4.000	74	330000	330336	330082, 330179	330241	
105 1.6	II (138A)	01/83-12/87	138 AR.000	77		330032	330082	330335	
60 1.1	II (138A)	04/85-12/87	146 A4.048	43	330000	330032, 330336	330082, 330273	330241	
60 Diesel 1.7	II (138A)	10/82-10/85	138 B6.000	43	330000	330032	330082, 330156, 330200, 330201	330241, 330335	
	II (138A)	05/85-12/87	138 C.000, 149 B3.000	44	330000	330032, 330048	330082, 330202	330241	
70 1.3	I (138A)	11/83-08/85	149 A3.000, 149 A7.000	48	330000	330032, 330336	330082, 330273	330241	
75 1.5	II (138A)	09/85-12/88	138 A2.000	55	330000	330032, 330336	330082, 330273	330241	
75 i.e. 1.5	I (138A)	10/85-05/87	138 C2.048, 149 C1.000	55	330000	330032, 330336	330082, 330178	330241	
SCUDO			**02/96 -**						
1.6	Box (220L)	02/96-	220 A 2.000	58		330060, 330074	330116, 330188	330251, 330681	
	Combinato (220P)	02/96-	220 A 2.000	58		330060, 330074	330116, 330188	330251, 330681	

OPS Oil Pressure Switches **BLS** Brake Light Switches **TT-RF** Temperature Transmitter and Radiator Fan Switches **RLS** Reverse Light Switches **VAR** Various

ERA S.p.A. Moncalieri (TO) Italy - tel: +39 011 6891511 - fax: +39 011 6472862 - www.eranet.it

Vehicle		Date	Engine	kW	OPS	BLS	TT-RF	RLS	VAR
1.6 D Multijet	(270_)	01/07-	9HU	66	330026	330629, 330715	330502	330681	
	Box (270_)	01/07-	9HU	66	330026	330629, 330715	330502	330681	
	Flatbed / Chassis (270_)	01/07-	9HU	66	330026	330629, 330715	330502	330681	
1.9 D	Box (220L)	02/96-	D9B	51	330023	330060, 330074	330109, 330134, 330272, 330588	330251, 330681	
	Box (220L)	04/98-	WJZ (DW8)	51	330026	330060, 330074	330155, 330272	330251, 330681	
	Combinato (220P)	02/96-04/98	D9B	51	330023	330060, 330074	330109, 330134, 330272, 330588	330251, 330681	
	Combinato (220P)	04/98-	WJZ (DW8)	51	330026	330060, 330074	330155, 330272	330251, 330681	
1.9 TD	Box (220L)	02/96-	DHX (XUD9TF/L)	66	330023, 330026	330060, 330074	330109, 330134, 330272, 330575, 330588	330249, 330513	
	Box (220L)	02/98-	D8B	68	330023, 330026	330060, 330074, 330715	330109, 330272, 330575, 330588	330249, 330513	
	Combinato (220P)	02/96-	D8B	68	330023, 330026	330060, 330074, 330715	330109, 330272, 330575, 330588	330249, 330513	
1.9 TD Eco	Combinato (220P)	02/96-	DHX (XUD9TF/L)	66	330023, 330026	330060, 330074	330109, 330134, 330272, 330575, 330588	330249, 330513	
2.0	Box (220L)	05/00-	RFN	100	330026	330060, 330074	330624	330681	
2.0 16V	Combinato (220P)	06/00-	RFN	100	330026	330060, 330074	330624	330681	
2.0 D Multijet	(270_)	01/07-	RHK	88	330026	330629, 330715	330502	330513	
	Box (270_)	01/07-	RHK	88	330026	330629, 330715	330502	330513	
	Flatbed / Chassis (270_)	01/07-	RHK	88	330026	330629, 330715	330502	330513	
	(270_)	01/07-	RHR	100	330026	330629, 330715	330502	330513	
	Box (270_)	01/07-	RHR	100	330026	330629, 330715	330502	330513	
	Flatbed / Chassis (270_)	01/07-	RHR	100	330026	330629, 330715	330502	330513	
2.0 JTD	Box (220L)	12/99-	RHX	69	330026	330060, 330074	330624	330513	
	Box (220L)	12/02-	RHZ	80	330026	330060, 330074	330624	330513	
	Combinato (220P)	12/99-	RHZ	80	330026	330060, 330074	330624	330513	
SEDICI			**06/06 -**						
1.6 16V		06/06-	M16A	79		330720, 330723		330745	
1.6 16V 4x4		06/06-	M16A	79	330015	330720, 330723		330745	
1.9 D Multijet		06/06-	D19AA	88		330720, 330723	330142	330745	
SEICENTO			**01/98 -**						
0.9	(187)	01/98-	1170 A1.046	29		330064	330082, 330179, 330561	330241	
	Van (187)	01/98-	1170 A1.046	29		330064	330082, 330179, 330561	330241	
1.1	(187)	01/98-	176 B2.000, 187 A1.000	40		330064	330120, 330142, 330179, 330682, 330693	330241, 330258	
	Van (187)	01/98-	176 B2.000	40		330064	330120, 330179, 330682	330241, 330258	
Elektra	(187)	01/99-	--	30		330064			
Elettrica	(187)	06/98-02/00	--	21		330064			
	(187)	03/00-10/02	--	22		330064			

OPS Oil Pressure Switches **BLS** Brake Light Switches **TT-RF** Temperature Transmitter and Radiator Fan Switches **RLS** Reverse Light Switches **VAR** Various

Vehicle		Date	Engine	kW	OPS	BLS	TT-RF	RLS	VAR
SIENA		**04/96 -**							
1.2	(178_)	09/01-	188 A4.000	44		330064, 330517	330082, 330156, 330228, 330273, 330560	330243, 330258	
	(178_)	09/98-	178 B5.000	54		330064, 330517	330082, 330124, 330156, 330228, 330273	330243, 330258, 330515	
	(178_)	06/02-	188 A5.000	57		330517			
	(178_)	09/01-	188 A5.000	59		330064, 330492, 330517	330142	330258	
1.3 JTD	(178_)	09/03-	188 A9.000	51		330517			
1.4	(178_)	04/96-	178 B2.000	51		330064	330082, 330228, 330273	330243	
	(178_)	01/07-	199 A1.000	57		330517	330693		
1.4 CAT	(178_)	04/96-	178 B2.016	51		330064	330082, 330228, 330273	330243, 330258	
1.5	(178_)	06/04-	178 E5.022	62		330064, 330517	330142	330243	
1.6	(178_)	11/00-	182 B6.000	76		330064	330082, 330228, 330273, 330495	330258, 330515	
1.6 16V	(178_)	09/98-	178 B3.000	78		330064, 330517	330082, 330143, 330228, 330273, 330555	330243, 330258, 330515	
1.7 TD	(178_)	02/06-	176 A3.000	51		330064, 330517	330228, 330641	330243	
1.9 D	(178_)	11/00-	223 A6.000	46		330517			
STILO		**10/01 -**							
1.2 16V	(192)	02/02-	188 A5.000	59		330081, 330517	330142	330258	
1.4 16V	(192)	03/05-	192 B2.000	66		330081, 330517	330553	330258	
	Multi Wagon (192)	03/05-	192 B2.000	66		330081, 330517	330553	330258	
	(192)	01/04-	843 A1.000	70		330081, 330517	330142, 330553	330258	
	Multi Wagon (192)	01/04-	843 A1.000	70		330081, 330517	330142, 330553	330258	
1.6	(192)	04/05-	--	100		330517			
1.6 16V	(192)	10/01-	182 B6.000	76		330081, 330517	330142	330508	
	Multi Wagon (192)	01/03-	182 B6.000	76		330081, 330517	330142	330508	
	(192)	05/05-	192 B30	77		330517		330508	
1.8 16V	(192)	10/01-	192 A4.000	98		330081, 330517	330495	330243	
	Multi Wagon (192)	01/03-	192 A4.000	98		330081, 330517	330495	330243	
1.9 D	Multi Wagon (192)	09/04-	192 B5.000	66		330081, 330517	330142	330244	
1.9 D Multijet	(192)	09/05-	192 A9.000	74		330081, 330517	330142	330243	
	Multi Wagon (192)	09/05-	192 A9.000	74		330081, 330517	330142	330243	
	(192)	09/05-	192 A8.000	88		330081, 330517	330142	330244, 330260	
	Multi Wagon (192)	09/05-	192 A8.000	88		330081, 330517	330142	330244, 330260	
	(192)	09/05-	937 A5.000	110		330081, 330517	330142	330260	
	Multi Wagon (192)	09/05-	937 A5.000	110		330081, 330517	330142	330260	
1.9 JTD	(192)	02/02-	192 A3.000	59		330081, 330517	330142	330243	
	Multi Wagon (192)	01/03-	192 A3.000	59		330081, 330517	330142	330243	

OPS Oil Pressure Switches **BLS** Brake Light Switches **TT-RF** Temperature Transmitter and Radiator Fan Switches **RLS** Reverse Light Switches **VAR** Various

ERA S.p.A. Moncalieri (TO) Italy - tel: +39 011 6891511 - fax: +39 011 6472862 - www.eranet.it

Vehicle		Date	Engine	kW	OPS	BLS	TT-RF	RLS	VAR
1.9 JTD	(192)	09/04-	192 B5.000	66		330081, 330517	330142	330244	
	(192)	10/01-	192 A1.000, 937 A7.000	85		330081, 330517	330142	330244	
	Multi Wagon (192)	01/03-	192 A1.000	85		330081, 330517	330142	330244	
	(192)	09/03-	937 A4.000	93		330081, 330517	330142	330260	
	Multi Wagon (192)	09/03-	937 A4.000	93		330081, 330517	330142	330260	
	(192)	04/04-	192 B1.000	100		330081, 330517	330142	330260	
	Multi Wagon (192)	04/04-	192 B1.000	100		330081, 330517	330142	330260	
	(192)	01/04-	192 A5.000	103		330081, 330517	330142	330260	
	Multi Wagon (192)	01/04-	192 A5.000	103		330081, 330517	330142	330260	
2.4 20V	(192)	10/01-	192 A2.000	125		330081, 330517	330495	330260	
STRADA			**06/99 -**						
1.2	(178E)	04/03-	188 A4.000	44		330064	330228, 330273, 330495, 330693	330243, 330515	
	(178E)	06/99-	178 B5.000	54		330064	330156, 330228, 330273, 330560	330243, 330515	
1.3 D Multijet	(178E)	05/06-	223 A9.000	62		330064	330142	330243	
1.7 TD	(178E)	06/99-	176 A3.000	51		330064	330120, 330156, 330228, 330273, 330641	330243, 330515	
1.9 D	(178E)	12/00-	223 A6.000	46		330064, 330492	330273, 330495	330243, 330515	
1.9 JTD	(178E)	04/03-	188 A2.000	59		330064, 330492	330142	330243, 330515	
TALENTO			**03/89 - 03/94**						
1.9 D	Box (290)	03/89-03/94	149 B1.000	52	330000	330032	330201, 330221, 330314	330236	
	Bus (290)	03/89-03/94	149 B1.000	52	330000	330032	330201, 330221, 330314	330236	
	Flatbed / Chassis (290)	03/89-03/94	149 B1.000	52	330000	330032	330201, 330221, 330314	330236	
2.0	Box (290)	03/89-03/94	170 B	55		330032	330086, 330273	330236	
	Bus (290)	03/89-03/94	170 B	55		330032	330086, 330273	330236	
	Flatbed / Chassis (290)	03/89-03/94	170 B	55		330032	330086, 330273	330236	
TEMPRA			**03/90 - 08/97**						
1.4 i.e.	(159)	03/92-08/96	160 A1.046, 836 A4.000	51	330000	330050, 330051	330082, 330228, 330273, 330656	330243	
	S.W. (159)	10/92-08/96	160 A1.046, 836 A4.000	51	330000	330050, 330051	330082, 330228, 330273, 330656	330243	
	(159)	03/91-08/96	159 A2.000	57	330000	330050, 330051	330082, 330228, 330273, 330293, 330656	330243	
	S.W. (159)	03/91-08/96	159 A2.000	57	330000	330050, 330051	330082, 330228, 330273, 330293, 330656	330243	
1.6	(159)	04/90-06/93	159 A3.048	51	330000	330050, 330051	330082, 330228, 330273, 330656	330243	
	S.W. (159)	07/93-07/96	159 A3.048	51	330000	330050, 330051	330082, 330228, 330273, 330656	330243	
	(159)	03/90-04/93	159 A3.000	63	330000	330050, 330051	330082, 330228, 330273, 330293	330243	

OPS Oil Pressure Switches **BLS** Brake Light Switches **TT-RF** Temperature Transmitter and Radiator Fan Switches **RLS** Reverse Light Switches **VAR** Various

Vehicle		Date	Engine	kW	OPS	BLS	TT-RF	RLS	VAR
1.6	S.W. (159)	12/90-04/93	159 A3.000	63	330000	330050, 330051	330082, 330228, 330273, 330293	330243	
1.6 i.e.	(159)	06/92-08/96	159 A3.048, 835 C1.000	55	330000	330050, 330051	330082, 330228, 330273, 330656	330243	
	S.W. (159)	10/92-08/96	159 A3.048, 835 C1.000	55	330000	330050, 330051	330082, 330228, 330273, 330656	330243	
	(159)	06/90-07/92	159 A3.046	57	330000	330050, 330051	330082, 330228, 330273, 330656	330243	
	S.W. (159)	10/90-08/96	159 A3.046, 835 C1.000	57	330000	330050, 330051	330082, 330228, 330273, 330656	330243	
	(159)	06/94-08/96	159 B9.000	63		330050, 330051	330107, 330228, 330273	330243	
	(159)	06/94-08/96	159 B9.000	66		330050, 330051	330107, 330228, 330273	330243	
	S.W. (159)	06/94-08/96	159 B9.000	66		330050, 330051	330107, 330228, 330273	330243	
1.8 i.e.	(159)	09/93-08/96	835 C4.000	66		330051	330082, 330273	330243	
	S.W. (159)	09/93-08/96	835 C4.000	66		330051	330082, 330273	330243	
	(159)	10/94-08/96	836 A5.000	74		330051	330082, 330273	330243	
	S.W. (159)	10/94-08/96	836 A5.000	74		330051	330082, 330273	330243	
	(159)	09/93-08/96	835 C2.000	76		330051	330082, 330273	330243	
	S.W. (159)	09/93-08/96	835 C2.000	76		330051	330082, 330273	330243	
	(159)	03/92-08/96	159 A4.046	77	330000	330051	330082, 330273	330243	
	S.W. (159)	03/92-12/93	159 A4.046	77	330000	330051	330082, 330273	330243	
1.9 D	(159)	07/91-08/96	160 A7.000	48	330000	330050, 330051	330082	330243	
	S.W. (159)	07/91-08/96	160 A7.000	48	330000	330050, 330051	330082	330243	
1.9 TD	(159)	07/92-08/96	160 B6.046	59	330000	330050, 330051	330082, 330290	330243	
	S.W. (159)	03/92-06/93	160 B6.046	59	330000	330050, 330051	330082, 330290	330243	
	(159)	05/90-08/96	160 A6.000, 160 D1.000	66		330050, 330051	330082, 330290, 330641	330243	
	S.W. (159)	07/91-02/95	160 A6.000, 160 D1.000	66		330050, 330051	330082, 330290, 330641	330243	
2.0 i.e.	(159)	10/90-08/96	159 A6.046	83	330000	330050, 330051	330082, 330228, 330273	330243	
	S.W. (159)	01/91-03/95	159 A6.046	83	330000	330050, 330051	330082, 330228, 330273	330243	
2.0 i.e. 4x4	S.W. (159)	03/92-03/95	159 A6.046	83		330051	330082, 330228	330343	
TIPO			**07/87 - 04/95**						
1.1	(160)	01/88-10/91	160 A3.000	41	330000	330050	330082, 330102, 330205, 330228, 330273, 330293	330243	
1.4	(160)	07/87-12/89	160 A1.000, 160 A1.048	52	330000	330050, 330051	330082, 330162, 330205, 330228, 330273	330243	
1.4 i.e.	(160)	05/89-04/95	160 A1.046, 836 A4.000	51	330000	330050, 330051	330082, 330116, 330205, 330228, 330273, 330293, 330656	330243	
	(160)	05/89-04/95	159 A2.000	57	330000	330050, 330051	330082, 330205, 330228, 330273, 330293	330243	

OPS Oil Pressure Switches **BLS** Brake Light Switches **TT-RF** Temperature Transmitter and Radiator Fan Switches **RLS** Reverse Light Switches **VAR** Various

ERA S.p.A. Moncalieri (TO) Italy - tel: +39 011 6891511 - fax: +39 011 6472862 - www.eranet.it

Vehicle		Date	Engine	kW	OPS	BLS	TT-RF	RLS	VAR
1.6	(160)	01/88-10/91	160 A2.000	61	330000	330050, 330051	330082, 330205, 330228, 330273	330243	
1.6 i.e.	(160)	10/92-04/95	159 A3.048, 835 C1.000	55	330000	330050, 330051	330082, 330205, 330228, 330273, 330293, 330656	330243	
	(160)	07/90-01/93	159 A3.046	57	330000	330050, 330051	330082, 330116, 330205, 330228, 330273, 330656	330243	
1.7 D	(160)	01/88-10/94	149 B4.000	43	330000	330050	330082, 330206	330243	
1.8 i.e.	(160)	09/93-04/95	835 C4.000	66		330051	330082, 330228, 330273	330243	
	(160)	04/93-04/95	835 C2.000	76		330051	330082, 330228, 330273	330243	
	(160)	10/90-06/93	159 A4.046	77	330000	330051	330082, 330228, 330273	330243	
1.8 i.e.16V Sport	(160)	11/89-06/92	160 A5.000	100	330000	330051	330082, 330205, 330273	330243	
1.9 D	(160)	07/91-08/96	160 A7.000	48	330000	330051	330082, 330206	330243	
1.9 TD	(160)	03/92-06/93	160 B6.046	59	330000	330050, 330051	330082, 330206, 330290	330243	
	(160)	09/90-04/95	160 A6.000, 160 A6.046, 160 D1.000	66	330000	330051	330082, 330206, 330290, 330641	330243	
2.0 16V	(160)	07/91-04/95	160 A8.046	107		330051	330082, 330205, 330228	330243	
2.0 i.e.	(160)	06/90-03/92	159 A5.046	80	330000	330051	330082, 330228, 330273	330243	
	(160)	03/90-04/95	159 A6.046	83		330051	330082, 330228, 330273	330243	
2.0 i.e. 16V Sport	(160)	03/93-04/95	836 A3.000	102		330051	330082, 330228	330243	
ULYSSE			**06/94 -**						
1.8	(220)	05/97-08/02	LFW	73	330023	330060, 330074	330109, 330122, 330147, 330188, 330588, 330624	330251, 330681	
1.9 TD	(220)	02/95-08/02	DHX (XUD9TF/L)	66	330023, 330026	330060, 330074	330109, 330134, 330147, 330272, 330575, 330588	330249	
2.0	(220)	06/94-08/02	RFU (XU10J2C)	89	330023, 330026	330060, 330074	330109, 330122, 330147, 330188, 330576, 330588	330251, 330681	
	(179AX)	08/02-	RFN(EW10J4)	100	330026	330629, 330704, 330713, 330715	330624	330681	
2.0 16V	(220)	05/98-09/00	RFV	97	330026	330060, 330074	330109, 330122, 330588, 330624	330249	
	(220)	09/00-08/02	RFN	100	330026	330060, 330074	330624	330681	
2.0 D Multijet	(179AX)	05/06-	RHK	88	330026	330629, 330704, 330713, 330715	330502		
	(179AX)	05/06-	RHR	100	330026	330629, 330704, 330713, 330715	330502		
2.0 JTD	(179AX)	05/03-	RHM (DW10ATED4)	79	330026	330629, 330704, 330713	330502, 330551		
	(179AX)	08/02-	RHW (DW10ATED4)	80	330026	330629, 330704, 330713, 330715	330502, 330551		
	(220)	10/99-08/02	RHZ	80	330026	330060, 330074	330624	330249, 330513	

OPS Oil Pressure Switches **BLS** Brake Light Switches **TT-RF** Temperature Transmitter and Radiator Fan Switches **RLS** Reverse Light Switches **VAR** Various

Vehicle		Date	Engine	kW	OPS	BLS	TT-RF	RLS	VAR
2.0 Turbo	(220)	06/94-08/02	RGX (XU10J2CTE)	108	330023, 330026	330060, 330074	330271	330249	
2.1 TD	(220)	03/96-10/99	P8C	80	330023	330060, 330074	330109, 330134, 330147, 330272, 330588	330249	
2.2 D Multijet	(179AX)	03/08-	4HT (DW12BTED4)	125	330026	330629, 330704, 330713, 330715	330502		
2.2 JTD	(179AX)	08/02-	4HW (DW12ATED4)	94	330026	330629, 330704, 330713, 330715	330502		
3.0 V6	(179AX)	08/02-	XFW	150	330026	330629, 330704, 330713	330624		
UNO		**01/83 - 08/00**							
1.0	(146A/E)	06/89-02/92	156 A2.000	31	330000	330050, 330051	330156, 330273	330243	
	(146A/E)	11/94-08/00	146 A2.166	35	330000	330050, 330051	330082, 330102, 330156, 330273		
1.3 Super Diesel	(146A/E)	06/83-03/92	127 A5.000, 146 B1.000	33	330000	330032, 330048	330082, 330202	330241, 330338	
1.3 Turbo i.e.	(146A/E)	09/89-03/91	146 A2.246	74	330000	330050	330116, 330202	330243	
	(146A/E)	04/85-08/89	146 A2.000	77	330000	330032	330202	330241	
1.4 Turbo i.e.	(146A/E)	09/89-09/93	146 A8.046	82	330000	330050	330082, 330116, 330202	330243	
	(146A/E)	12/89-12/96	146 A8.000	87	330000	330050	330082, 330116, 330202	330243	
1.9 D	(146A/E)	09/89-03/94	149 B5.046	44	330000	330050	330082, 330202	330243	
45 0.9	(146A/E)	03/83-09/92	146 A.000, 146 A.1000	33	330001	330032, 330048, 330049, 330336	330082, 330156, 330484	330241, 330338	
45 1.0	(146A/E)	06/86-12/93	156 A2.048, 156 A2.100	32	330000	330050, 330051	330082, 330102, 330156, 330273	330241	
45 i.e. 1.0	(146A/E)	04/84-10/95	156 A2.246	33	330000	330050, 330051	330082, 330102, 330116, 330156, 330273	330241, 330258	
50 1.1	(146A/E)	01/90-12/93	156 C.046	37	330000	330050, 330051	330082, 330102, 330116, 330156, 330273	330241, 330243, 330258	
50 i.e. 1.1	(146A/E)	06/92-12/93	146 C3.000	36	330000	330050, 330051	330082, 330102, 330116, 330156, 330273	330258	
55 1.1	(146A/E)	01/83-08/89	138 B.000	40	330000	330032	330082, 330484	330338	
60 1.1	(146A/E)	04/89-12/92	160 A3.000	42	330000	330050, 330051	330082, 330102, 330156, 330273	330241	
	(146A/E)	05/85-08/89	146 A4.048	43	330000	330032, 330048	330082, 330273	330241	
60 Diesel 1.7	(146A/E)	09/89-12/93	146 B2.000	42	330000	330050	330082, 330202	330243	
	(146A/E)	07/86-08/89	149 B3.000	44		330032, 330048	330082, 330202	330241	
70 i.e. 1.4	(146A/E)	09/89-12/93	160 A1.046	51	330000	330050, 330051	330082, 330228, 330273, 330656	330243, 330258	
	(146A/E)	09/89-12/93	146 C1.000	53			330656		
70 S 1.4	(146A/E)	09/89-10/92	160 A1.048	52	330000	330050, 330051	330082, 330228, 330273, 330656	330243	
70 TD 1.4	(146A/E)	10/86-10/90	146 B.000, 146 B3.000	52	330000	330032, 330048, 330050	330082, 330202	330241, 330243, 330338	

OPS Oil Pressure Switches **BLS** Brake Light Switches **TT-RF** Temperature Transmitter and Radiator Fan Switches **RLS** Reverse Light Switches **VAR** Various

ERA S.p.A. Moncalieri (TO) Italy - tel: +39 011 6891511 - fax: +39 011 6472862 - www.eranet.it

Vehicle		Date	Engine	kW	OPS	BLS	TT-RF	RLS	VAR
75 i.e. 1.5	(146A/E)	10/85-12/93	138 C2.048, 149 C1.000	55	330000	330032, 330048, 330049, 330050, 330051, 330336	330082, 330116, 330156, 330202, 330228, 330273, 330484	330241, 330243, 330258, 330338	
X 1/9			**11/72 - 12/89**						
1.3	(128 AS)	10/75-06/78	128 AS.000	54	330000	330032	330082, 330291	330338	
FORD									
C-MAX			**02/07 -**						
1.6		02/07-	HWDA	74	330029	330597, 330726, 330733, 330734, 330740	330144, 330585	330593, 330611, 330751	
1.6 TDCi		02/07-	HHDA	66	330026	330597, 330726, 330733, 330734, 330740	330502	330593, 330611, 330751	
		02/07-	G8DA	80	330026	330597, 330726, 330733, 330734, 330740	330502	330593, 330611, 330751	
1.8		02/07-	QQDA	92	330029	330597, 330726, 330733, 330734, 330740	330585, 330640	330593, 330611, 330751	
1.8 Flexifuel		02/07-	Q7DA	92	330029	330597, 330726, 330733, 330734, 330740	330585, 330640	330593, 330611, 330751	
1.8 TDCi		02/07-	KKDA	85	330029	330597, 330726, 330733, 330734, 330740		330593, 330611, 330751	
2.0		02/07-	AODA	107	330029	330597, 330726, 330733, 330734, 330740	330585, 330640	330593, 330611, 330751	
2.0 CNG		04/09-	SYDA	107		330726, 330733, 330734, 330740		330751	
2.0 LPG		06/08-	SYDA	107		330726, 330733, 330734, 330740		330751	
2.0 TDCi		02/08-	IXDA	81	330026	330597, 330726, 330733, 330734, 330740	330502	330593, 330611, 330751	
		02/07-	G6DA	100	330026	330597, 330726, 330733, 330734, 330740	330502	330593, 330611, 330751	
CAPRI			**01/78 - 04/87**						
1.3	III (GECP)	01/78-06/85	J1E	40	330005	330033	330088	330232	
CORTINA			**10/62 - 03/72**						
1300		10/70-03/72	KL 13 H	42	330005	330033	330088, 330185		
COUGAR			**08/98 - 12/01**						
2.0 16V	(EC_)	08/98-12/01	EDBA, EDBB, EDBC, EDBD	96	330028, 330595	330077, 330549	330605, 330609	330602, 330611	
2.5 ST 200	(EC_)	01/00-12/01	SGA	151		330077, 330549	330144, 330585	330611	
2.5 V6 24V	(EC_)	08/98-12/01	LCBA	125	330595	330077, 330549	330144, 330585, 330605, 330609	330611	
	(EC_)	06/00-12/01	LCBB, LCBC, LCBE	125		330077, 330549	330144, 330585, 330607	330611	

OPS Oil Pressure Switches **BLS** Brake Light Switches **TT-RF** Temperature Transmitter and Radiator Fan Switches **RLS** Reverse Light Switches **VAR** Various

Vehicle		Date	Engine	kW	OPS	BLS	TT-RF	RLS	VAR
ESCORT		**09/80 -**							
1.1	'86 Express (AVF)	05/86-07/90	GSG	37			330185		
	III (GAA)	08/83-12/85	GSE	37	330005		330088, 330091, 330096, 330101, 330119, 330168, 330303		
	III Estate (AWA)	08/83-12/85	GSE	37	330005		330088, 330091, 330096, 330101, 330119, 330168, 330303		
	IV (GAF, AWF, ABFT)	12/85-07/90	GSG	37	330005		330119, 330185	330250	
1.3	IV (GAF, AWF, ABFT)	01/86-07/90	JBB, JLA, JLB	44	330005		330088, 330091, 330096, 330101, 330119, 330168, 330303, 330550		
	IV Estate (AWF, AVF)	01/86-07/90	JBB, JLA, JLB	44	330005		330088, 330091, 330096, 330101, 330119, 330168, 330303, 330550		
	V (GAL)	07/90-09/92	J4B, J6A	44	330005	330066	330119, 330185	330250	
	V Estate (GAL, AVL)	09/91-09/92	J4B, J6A	44	330005	330066	330119, 330185	330250	
	VI (GAL)	09/92-01/95	J4B, J6A	44	330005	330066	330119, 330185	330250	
	VI Estate (GAL)	09/92-01/95	J4B, J6A	44	330005	330066	330119, 330185	330250	
	VI Saloon (GAL)	08/93-01/95	J4B, J6A	44	330005	330066	330119, 330185	330250	
	VII (GAL, AAL, ABL)	01/95-10/98	J4B, J6A	44	330005	330066	330119, 330144	330263	
	VII Estate (GAL, ANL)	01/95-10/98	J4B, J6A	44	330005	330066	330119, 330144	330263	
	VII Saloon (GAL, AFL)	01/95-02/99	J4B, J6A	44	330005	330066	330119, 330144	330263	
	IV (GAF, AWF, ABFT)	07/88-10/90	JBA	46			330550		
	III (GAA)	09/80-12/85	JPA	51	330005		330096, 330303		
	III Convertible (ALD)	09/83-12/85	JPA	51	330005		330096, 330303		
	III Estate (AWA)	03/81-12/85	JPA	51	330005		330096, 330303		
	IV (GAF, AWF, ABFT)	11/86-07/88	--	51			330550		
	IV Estate (AWF, AVF)	11/86-07/88	--	51			330550		
1.4	IV (GAF, AWF, ABFT)	10/85-10/90	FUAA	51			330550		
	IV Estate (AWF, AVF)	10/85-10/90	FUAA	51			330550		
	'91 Express (AVL)	07/90-12/94	F6F, F6G	52			330185		
	V (GAL)	07/90-09/92	F6F, F6G	52	330005	330066	330101, 330119, 330185, 330211, 330622	330250	
	V Convertible (ALL)	07/90-12/92	F6F, F6G	52	330005	330066	330101, 330119, 330185, 330211, 330622	330250	
	V Estate (GAL, AVL)	07/90-09/92	F6F, F6G	52	330005	330066	330101, 330119, 330185, 330211, 330622	330250	
	VI (GAL)	09/92-01/95	F6F, F6G	52	330005	330066	330119, 330185, 330211, 330622	330250	
	VI Convertible (ALL)	12/92-04/94	F6F, F6G	52	330005	330066	330119, 330185, 330211, 330622	330250	

OPS Oil Pressure Switches **BLS** Brake Light Switches **TT-RF** Temperature Transmitter and Radiator Fan Switches **RLS** Reverse Light Switches **VAR** Various

ERA S.p.A. Moncalieri (TO) Italy - tel: +39 011 6891511 - fax: +39 011 6472862 - www.eranet.it

Vehicle		Date	Engine	kW	OPS	BLS	TT-RF	RLS	VAR
1.4	VI Estate (GAL)	09/92-01/94	F6F, F6G	52	330005	330066	330119, 330185, 330211, 330622	330250	
	VI Saloon (GAL)	08/93-04/94	F6F, F6G	52	330005	330066	330119, 330185, 330211, 330622	330250	
	'95 Box (AVL)	01/95-	F4B	54			330185		
	IV (GAF, AWF, ABFT)	01/86-07/90	F6B, F6D, FUC	54	330005		330113, 330550	330232	
	IV Convertible (ALF)	02/87-07/90	F6B, F6D, FUC	54	330005		330113, 330550	330232	
	IV Estate (AWF, AVF)	01/86-07/90	F6B, F6D, FUC	54	330005		330113, 330550	330232	
	IV (GAF, AWF, ABFT)	01/86-07/90	FUA	55			330550		
	IV Convertible (ALF)	01/86-07/90	FUA	55			330550		
	IV Estate (AWF, AVF)	01/86-07/90	FUA	55			330550		
	VI (GAL)	01/94-01/95	FUH	55	330005	330066	330101, 330119, 330185, 330211	330250	
	VI Estate (GAL)	01/94-01/95	F4B	55	330005	330066	330119, 330185, 330211, 330622	330263	
	VI Saloon (GAL)	08/93-01/95	F4B	55	330005	330066	330119, 330185, 330211, 330622	330263	
	VII Convertible (ALL)	02/95-08/98	F4B	55	330005	330066	330119, 330185, 330211, 330622	330263	
1.4 i	VI Convertible (ALL)	07/93-01/95	F4B	55	330005	330066	330119, 330185, 330211, 330622	330263	
1.6	IV (GAF, AWF, ABFT)	01/86-12/88	LP2	58			330550		
	IV Convertible (ALF)	01/86-12/87	LP2	58			330550		
	IV Estate (AWF, AVF)	01/86-07/90	LP2	58			330550		
	IV (GAF, AWF, ABFT)	04/89-07/90	LUG	65			330550		
	V (GAL)	07/90-08/92	LUJ, LUK	66	330005	330066	330101, 330119, 330185, 330211, 330622	330250	
	V Estate (GAL, AVL)	07/90-08/92	LUJ, LUK	66	330005	330066	330101, 330119, 330185, 330211, 330622	330250	
	V (GAL)	07/90-12/92	LJF	77	330005	330066	330101, 330119, 330185, 330211, 330622	330250	
	V Convertible (ALL)	07/90-12/92	LJF	77	330005	330066	330101, 330119, 330185, 330211, 330622	330250	
	V Estate (GAL, AVL)	07/90-09/92	LJF	77	330005	330066	330101, 330119, 330185, 330211, 330622	330250	
1.6 16V	VII (GAL, AAL, ABL)	01/95-10/98	L1E	66	330005	330066	330125, 330144, 330185, 330211, 330229, 330599, 330613, 330640	330263, 330590	
	VII Estate (GAL, ANL)	01/95-02/99	L1E	66	330005	330066	330125, 330144, 330185, 330211, 330229, 330599, 330613, 330640	330263, 330590	
1.6 16V 4x4	VII (GAL, AAL, ABL)	01/95-10/98	L1E	66	330005	330066	330125, 330144, 330185, 330211, 330229, 330599, 330613, 330640	330263, 330590	

OPS Oil Pressure Switches **BLS** Brake Light Switches **TT-RF** Temperature Transmitter and Radiator Fan Switches **RLS** Reverse Light Switches **VAR** Various

Vehicle		Date	Engine	kW	OPS	BLS	TT-RF	RLS	VAR
1.6 16V XR3i	VII Convertible (ALL)	02/95-12/96	L1H	65	330005	330066	330125, 330144, 330185, 330211, 330229, 330599, 330613, 330640	330263, 330590	
	VI Convertible (ALL)	12/92-01/95	L1E	66	330005	330066	330125, 330185, 330211	330250, 330601	
	VII Convertible (ALL)	02/95-09/99	L1E	66	330005	330066	330125, 330144, 330185, 330211, 330229, 330599, 330613, 330640	330263, 330590	
1.6 i	IV (GAF, AWF, ABFT)	01/86-05/90	L4B	66			330550		
	IV Convertible (ALF)	01/86-07/90	L4B	66			330550		
	IV Estate (AWF, AVF)	01/86-07/90	L4B	66			330550		
	IV (GAF, AWF, ABFT)	08/89-07/90	LJB	75			330550		
	IV Convertible (ALF)	08/89-07/90	LJB	75			330550		
	III Convertible (ALD)	09/83-12/85	LR1, LRA	77	330005		330096, 330303		
1.6 i 16V	VI (GAL)	01/94-01/95	L1H	65	330005	330066	330125, 330185, 330211	330250, 330601	
	VI Convertible (ALL)	02/94-01/95	L1H	65				330601	
	VI Estate (GAL)	01/94-01/95	L1H	65				330601	
	VI Saloon (GAL)	01/94-01/95	L1H	65				330601	
	VII (GAL, AAL, ABL)	01/95-08/95	L1H	65			330613	330590	
	VII Estate (GAL, ANL)	01/95-08/95	L1H	65			330613	330590	
	VII Saloon (GAL, AFL)	01/95-08/95	L1H	65			330613	330590	
	VI (GAL)	09/92-01/95	L1E	66	330005	330066	330125, 330185, 330211	330250, 330601	
	VI Estate (GAL)	09/92-01/95	L1E	66	330005	330066	330125, 330185, 330211	330250, 330601	
	VI Saloon (GAL)	08/93-01/95	L1E, L1K	66	330005	330066	330125, 330185, 330211	330250, 330601	
	VII Saloon (GAL, AFL)	01/95-02/99	L1E, L1K	66	330005	330066	330125, 330144, 330185, 330211, 330229, 330599, 330640	330263, 330590	
1.6 Turbo RS	IV (GAF, AWF, ABFT)	01/86-07/90	LNB	97	330005		330101, 330115, 330303, 330550	330232	
1.6 XR3i	III (GAA)	10/82-12/85	LR1, LRA	77	330005		330096, 330303		
	IV (GAF, AWF, ABFT)	01/86-08/89	LR2, LRB	77	330005		330101, 330182, 330550		
	IV Convertible (ALF)	01/86-07/90	LR2, LRB	77	330005		330101, 330182, 330550		
1.8 16V	V Estate (GAL, AVL)	02/92-12/92	RDA	77	330005	330066	330125, 330185, 330211	330250, 330601	
	VII (GAL, AAL, ABL)	01/95-08/95	RDA	77	330005, 330028	330066	330125, 330144, 330182, 330185, 330211, 330229, 330599, 330613, 330640	330263, 330601	
	VII Estate (GAL, ANL)	01/95-08/95	RDA	77	330005, 330028	330066	330125, 330144, 330182, 330185, 330211, 330229, 330599, 330613, 330640	330263, 330601	

OPS Oil Pressure Switches **BLS** Brake Light Switches **TT-RF** Temperature Transmitter and Radiator Fan Switches **RLS** Reverse Light Switches **VAR** Various

ERA S.p.A. Moncalieri (TO) Italy - tel: +39 011 6891511 - fax: +39 011 6472862 - www.eranet.it

Vehicle		Date	Engine	kW	OPS	BLS	TT-RF	RLS	VAR
1.8 16V	VII Saloon (GAL, AFL)	01/95-08/95	RDA	77	330005, 330028	330066	330125, 330144, 330182, 330185, 330211, 330229, 330599, 330613, 330640	330263, 330601	
	VII (GAL, AAL, ABL)	01/95-10/98	RKC	85	330005, 330028	330066	330125, 330144, 330182, 330185, 330211, 330229, 330599, 330613, 330640	330263, 330590	
	VII Estate (GAL, ANL)	01/95-02/99	RKC	85	330005, 330028	330066	330125, 330144, 330182, 330185, 330211, 330229, 330599, 330613, 330640	330263, 330590	
	VII Saloon (GAL, AFL)	01/95-02/99	RKC	85	330005, 330028	330066	330125, 330144, 330182, 330185, 330211, 330229, 330599, 330613, 330640	330263, 330590	
1.8 16V XR3i	V (GAL)	02/92-12/92	RDA	77	330005	330066	330125, 330185, 330211, 330613	330250, 330601	
	V Convertible (ALL)	02/92-12/92	RDA	77	330005	330066	330125, 330185, 330211	330250, 330601	
	VI Convertible (ALL)	12/92-01/95	RDA	77	330005	330066	330125, 330185, 330211, 330613	330250, 330601	
	VII Convertible (ALL)	02/95-08/98	RDA	77	330005, 330028	330066	330125, 330144, 330182, 330185, 330211, 330229, 330599, 330613, 330640	330263, 330601	
	VII Convertible (ALL)	10/95-08/98	RKC	85	330005, 330028	330066	330125, 330144, 330182, 330185, 330211, 330229, 330599, 330640	330263, 330590	
	V (GAL)	02/92-12/92	RQB	96	330005	330066	330125, 330185, 330211, 330613	330250, 330590, 330601	
	V Convertible (ALL)	02/92-12/92	RQB	96	330005	330066	330125, 330185, 330211, 330613	330250, 330601	
	VI (GAL)	09/92-01/95	RQB	96	330005	330066	330125, 330185, 330211, 330613	330250, 330590, 330601	
	VI Convertible (ALL)	12/92-01/95	RQB	96	330005	330066	330125, 330185, 330211, 330613	330250, 330601	
	VII Convertible (ALL)	02/95-08/00	RQB	96			330613	330601	
1.8 D	'91 Express (AVL)	07/90-12/94	RTH	44				330601	
	IV (GAF, AWF, ABFT)	01/89-07/90	RTA, RTB	44	330005	330033	330101, 330182, 330550	330441	
	IV Estate (AWF, AVF)	01/89-07/90	RTA, RTB	44	330005	330033	330101, 330182, 330550	330441	
	V (GAL)	07/90-12/92	RTE, RTF, RTH	44	330005	330066	330113, 330182, 330229, 330591	330250, 330601	
	V Estate (GAL, AVL)	07/90-12/92	RTE, RTF, RTH	44	330005	330066	330113, 330182, 330229, 330591	330250, 330601	
	VI (GAL)	09/92-01/95	RTE, RTF, RTH	44	330005	330066	330113, 330182, 330229, 330591	330250, 330601	
	VI Estate (GAL)	09/92-01/95	RTH	44	330005	330066	330113, 330182, 330229, 330591	330250, 330601	

OPS Oil Pressure Switches **BLS** Brake Light Switches **TT-RF** Temperature Transmitter and Radiator Fan Switches **RLS** Reverse Light Switches **VAR** Various

Vehicle		Date	Engine	kW	OPS	BLS	TT-RF	RLS	VAR
1.8 D	VI Saloon (GAL)	08/93-01/95	RTE, RTF, RTH	44	330005	330066	330113, 330182, 330229, 330591	330250, 330601	
	VII (GAL, AAL, ABL)	01/95-12/96	RTE, RTF, RTH	44	330005	330066	330113, 330182, 330229, 330591	330263, 330601	
	VII Estate (GAL, ANL)	01/95-02/99	RTH	44				330601	
	VII Saloon (GAL, AFL)	01/95-12/96	RTE, RTF, RTH	44	330005	330066	330113, 330182, 330229, 330591	330263, 330601	
1.8 i 16V	VI (GAL)	09/92-01/95	RDA	77	330005	330066	330125, 330185, 330211, 330613	330250, 330601	
	VI Estate (GAL)	01/93-01/95	RDA	77	330005	330066	330125, 330185, 330211, 330613	330250, 330601	
	VI Saloon (GAL)	08/93-01/95	RDA	77	330005	330066	330125, 330185, 330211, 330613	330250	
	VI Estate (GAL)	02/93-01/95	RQB	96	330005	330066	330125, 330185, 330211, 330613	330250, 330601	
1.8 TD	VI (GAL)	02/93-01/95	RFD, RFK, RFS	66	330005	330066	330113, 330182, 330229, 330591	330250, 330601	
	VI Estate (GAL)	02/93-01/95	RFD, RFK	66	330005	330066	330113, 330182, 330229, 330591	330250, 330601	
	VI Saloon (GAL)	08/93-01/95	RFD, RFK	66	330005	330066	330113, 330182, 330229, 330591	330250, 330601	
	VII (GAL, AAL, ABL)	01/95-10/98	RFD, RFK	66	330005	330066	330113, 330144, 330182, 330229, 330591	330263	
	VII Convertible (ALL)	09/95-08/98	RFD, RFK	66	330005	330066	330113, 330144, 330182, 330229, 330591	330263	
	VII Estate (GAL, ANL)	01/95-02/99	RFD, RFK	66	330005	330066	330113, 330144, 330182, 330229, 330591	330263	
	VII Saloon (GAL, AFL)	01/95-10/98	RFD, RFK	66	330005	330066	330113, 330144, 330182, 330229, 330591	330263	
1.8 Turbo D	VII (GAL, AAL, ABL)	12/95-10/98	RVA	51	330005	330066	330113, 330144, 330229, 330591	330263	
	VII Convertible (ALL)	10/96-08/99	RVA	51	330005	330066	330113, 330144, 330229, 330591	330263	
	VII Estate (GAL, ANL)	12/95-02/99	RVA	51	330005	330066	330113, 330144, 330229, 330591	330263	
	VII Saloon (GAL, AFL)	12/95-02/99	RVA	51	330005	330066	330113, 330144, 330229, 330591	330263	
1.8 XR3i 16V 4x4	VI (GAL)	08/93-01/95	RDA	77	330005	330066	330125, 330185, 330211, 330613	330250, 330601	
	VI (GAL)	08/93-01/95	RQB	96	330005	330066	330125, 330185, 330211, 330613	330250, 330601	
RS 2000	V (GAL)	05/91-12/92	N7A	110	330005	330066	330125, 330185, 330613	330250	
	VI (GAL)	09/92-01/95	N7A	110			330613		
	VII (GAL, AAL, ABL)	02/95-02/98	N7A	110	330005	330066	330185, 330613		
RS 2000 4x4	VI (GAL)	08/93-01/95	N7A	110			330613		
	VII (GAL, AAL, ABL)	02/95-10/98	N7A	110	330005	330066	330185, 330613		
RS Cosworth 4x4	VI (GAL)	09/92-01/95	N5F	162			330113, 330120, 330229	330250	
	VII (GAL, AAL, ABL)	02/95-10/98	N5F	162			330113, 330229		

OPS Oil Pressure Switches **BLS** Brake Light Switches **TT-RF** Temperature Transmitter and Radiator Fan Switches **RLS** Reverse Light Switches **VAR** Various

ERA S.p.A. Moncalieri (TO) Italy - tel: +39 011 6891511 - fax: +39 011 6472862 - www.eranet.it

Vehicle		Date	Engine	kW	OPS	BLS	TT-RF	RLS	VAR
ESCORT CLASSIC		**10/98 - 07/00**							
1.6 16V	(AAL, ABL)	10/98-07/00	L1E	66	330005, 330028	330066	330125, 330144, 330182, 330229, 330599, 330613, 330640	330263, 330590	
	Turnier (ANL)	02/99-07/00	L1E	66	330005, 330028	330066	330125, 330144, 330182, 330229, 330599, 330613, 330640	330263, 330590	
1.8 TD	(AAL, ABL)	10/98-07/00	RFD, RFK	66	330005	330066	330113, 330144, 330182, 330229, 330591	330263	
	Turnier (ANL)	02/99-07/00	RFD, RFK	66	330005	330066	330113, 330144, 330182, 330229, 330591	330263	
FIESTA		**05/76 -**							
0.9	I (GFBT)	05/76-08/83	TKA, TKW	29	330005	330033	330088, 330091, 330168	330441	
	I (GFBT)	05/76-08/83	TLA	33	330005	330033	330088, 330091, 330168	330441	
1.0	II (FBD)	09/83-02/89	TKB	33			330550		
	II (FBD)	09/83-11/89	--	33			330550		
	III (GFJ)	03/89-12/95	TLB	33	330005	330066	330119, 330185, 330550	330250	
1.0 i	IV (JA_, JB_)	02/97-09/99	--	38	330005	330066	330144	330263	
1.1	II (FBD)	05/86-02/89	GSH	36	330005		330088, 330091, 330101, 330119, 330182, 330550	330441	
	II (FBD)	09/83-02/89	GLC, GSF	37	330005		330088, 330091, 330096, 330168, 330303, 330550	330441	
	III (GFJ)	03/89-12/95	G6A	37	330005	330066	330144, 330185, 330550	330250	
	I (GFBT)	05/76-08/83	GLA	39	330005	330033	330088, 330091, 330168, 330303	330441	
	I (GFBT)	02/81-08/83	GLW	40	330005	330033	330088, 330091, 330168, 330303	330441	
	III (GFJ)	03/89-12/95	GUD, GUE	40	330005	330066	330101, 330119, 330185, 330550	330250	
1.25	VI	10/08-	STJA	44	330029	330597, 330726, 330734, 330740	330585	330751	
	Van	01/09-	SNJA	60		330597, 330726, 330734, 330740		330751	
	VI	10/08-	SNJA	60	330029	330597, 330726, 330734, 330740	330585	330751	
1.25 16V	V (JH_, JD_)	03/03-	M7JA, M7JB	51	330005	330077, 330549, 330597, 330734	330144, 330585	330263	
	V (JH_, JD_)	05/02-	FUJA, FUJB	55	330005	330077, 330549, 330597, 330734	330144, 330585	330263	
1.25 i 16V	IV (JA_, JB_)	08/95-01/02	DHA, DHB, DHC, DHD, DHE, DHF, DHG	55	330005	330066	330119, 330144, 330598	330263, 330590	
1.3	Box (F3L, F5L)	09/91-02/96	J6B	44	330005	330066	330119, 330144, 330185	330250	

OPS Oil Pressure Switches **BLS** Brake Light Switches **TT-RF** Temperature Transmitter and Radiator Fan Switches **RLS** Reverse Light Switches **VAR** Various

Vehicle		Date	Engine	kW	OPS	BLS	TT-RF	RLS	VAR
1.3	Box (J5_, J3_)	02/96-	J4C	44	330005	330066	330119, 330144, 330612	330263	
	III (GFJ)	03/89-12/92	JBC	44		330066	330119, 330144, 330185, 330550	330250	
	V (JH_, JD_)	11/01-	BAJA	44	330028	330077, 330549, 330597, 330734	330586	330263	
	I (GFBT)	08/77-08/83	J3E	49	330005	330033	330091, 330168	330441	
	II (FBD)	09/83-01/87	JPC	51	330005		330091, 330168, 330550	330441	
	V (JH_, JD_)	11/01-	A9JA, A9JB	51	330028	330077, 330549, 330597, 330734	330586	330263	
	Van	10/03-	A9JA	51	330028	330077, 330549, 330597, 330734	330586	330263	
1.3 CAT	III (GFJ)	05/91-01/97	J6B	44	330005	330066	330119, 330144, 330185, 330550	330250	
1.3 i	IV (JA_, JB_)	08/95-01/02	JJA, JJC, JJE, JJJ, JJK, JJM	37	330005	330066	330119, 330144, 330598, 330612	330263	
	IV (JA_, JB_)	08/95-01/02	J4C, J4J, J4L, J4Q, J4R, J4T	44	330005	330066	330119, 330144, 330598, 330612	330263	
1.4	II (FBD)	10/86-02/89	F6A, F6C	52			330550		
	III (GFJ)	03/89-12/95	F6E	52	330005, 330695	330066	330113, 330185, 330211, 330550	330250	
	II (FBD)	02/87-02/89	FUD	54	330005		330113, 330182, 330550		
	III (GFJ)	03/89-12/95	FUG, FUJ	54	330005	330066	330101, 330113, 330119, 330182, 330185, 330211, 330550	330250	
	II (FBD)	10/85-11/89	FUB	55	330005		330113, 330182, 330550		
	VI	10/08-	SPJA	71	330029	330597, 330726, 330734, 330740	330585	330592, 330751	
1.4 CAT	III (GFJ)	03/89-12/95	F4A	54	330005	330066	330119, 330185, 330211, 330550	330250	
1.4 16V	V (JH_, JD_)	11/01-	FXJA, FXJB	59	330005	330077, 330549, 330597, 330734	330144, 330585	330263, 330592, 330751	
1.4 i 16V	IV (JA_, JB_)	04/96-01/02	FHA, FHE	66	330005	330066	330119, 330144, 330598	330263	
1.4 LPG	VI	01/09-	RTJA	71		330597, 330726, 330734, 330740		330751	
1.4 TDCi	V (JH_, JD_)	11/01-	F6JA, F6JB	50	330026	330077, 330549, 330597, 330734	330502	330263, 330592, 330751	
	Van	10/03-	F6JA	50	330026	330077, 330549, 330597, 330734	330502	330263, 330751	
	Van	01/09-	F6JB	50		330597, 330726, 330734, 330740		330751	
	VI	01/09-	F6JB	50		330597, 330726, 330734, 330740		330751	
1.6	III (GFJ)	01/89-01/94	LUH	65	330005	330066	330101, 330119, 330185, 330211, 330550	330250	
1.6 16V	V (JH_, JD_)	11/01-	FYJA	74	330005	330077, 330549, 330597, 330734	330144, 330585	330263	
1.6 16V Sport	IV (JA_, JB_)	02/00-01/02	L1T, L1V	76	330005	330066, 330077, 330549	330119, 330144, 330598	330263	

OPS Oil Pressure Switches **BLS** Brake Light Switches **TT-RF** Temperature Transmitter and Radiator Fan Switches **RLS** Reverse Light Switches **VAR** Various

ERA S.p.A. Moncalieri (TO) Italy - tel: +39 011 6891511 - fax: +39 011 6472862 - www.eranet.it

Vehicle		Date	Engine	kW	OPS	BLS	TT-RF	RLS	VAR
1.6 D	II (FBD)	04/84-02/89	LTB	40	330005		330101, 330182, 330550	330250	
1.6 i 16V	III (GFJ)	01/94-12/95	L1G	65	330005	330066	330125, 330185, 330550, 330599, 330613	330250, 330590	
1.6 TDCi	VI	10/08-	HHJF	55		330597, 330726, 330734, 330740		330751	
	V (JH_, JD_)	11/04-	HHJA, HHJB	66	330026	330597, 330734	330502	330263	
	Van	01/09-	HHJC	66		330597, 330726, 330734, 330740		330751	
	VI	10/08-	HHJD	66	330026	330597, 330726, 330734, 330740	330502	330751	
	VI	02/10-	TZJA	70		330597, 330726, 330734, 330740		330751	
1.6 Ti	VI	10/08-	HXJA	88	330029	330597, 330726, 330734, 330740	330585	330751	
1.6 Turbo	III (GFJ)	03/90-10/92	LHA	96	330005	330066	330101, 330119, 330185, 330211, 330550	330250	
1.6 XR2	I (GFBT)	08/81-08/83	L3E	62	330005		330091, 330168	330441	
	II (FBD)	03/84-02/89	LUD	70	330005		330096, 330182, 330550		
	II (FBD)	04/84-02/89	LUB	71	330005		330096, 330182, 330550		
1.6 XR2i	III (GFJ)	03/89-03/93	LJD	76	330005	330066	330101, 330119, 330185, 330211, 330550	330250	
	III (GFJ)	03/89-01/94	LJC	81	330005	330066	330101, 330119, 330185, 330211, 330550	330250	
1.8 16V	III (GFJ)	02/92-12/95	RDB	77		330066	330125, 330185, 330550, 330599, 330613	330250, 330590	
1.8 D	Box (FVD)	03/89-12/95	RTC, RTD, RTG	43	330005	330066	330113, 330182	330250	
	Box (F3L, F5L)	09/91-02/96	RTC, RTD, RTG	44	330005	330066	330113, 330182	330250	
	Box (J5_, J3_)	02/96-	RTK	44	330005	330066	330113, 330144, 330182	330263	
	III (GFJ)	03/89-12/95	RTC, RTD, RTG	44	330005	330066	330113, 330182, 330550	330250	
	IV (JA_, JB_)	08/95-04/00	RTJ, RTK	44	330005	330066	330113, 330144, 330182, 330598	330263	
1.8 DI	Box (J5_, J3_)	09/00-	RTP	55	330028	330066		330263	
	IV (JA_, JB_)	04/00-01/02	RTN, RTP, RTQ	55	330028	330066	330598, 330606	330263	
1.8 TD	III (GFJ)	03/93-12/95	RFL	57			330550		
1.8 XR2i 16V	III (GFJ)	02/92-12/95	RQC	96		330066	330125, 330185, 330550, 330599, 330613	330250, 330590	
D 1.8	Box (JV_)	05/98-	RTJ, RTK	44	330005	330066	330113, 330144, 330182	330263	
ST150	V (JH_, JD_)	03/05-	N4JB	110	330029	330597, 330734	330585, 330640	330263	

FORD

OPS Oil Pressure Switches **BLS** Brake Light Switches **TT-RF** Temperature Transmitter and Radiator Fan Switches **RLS** Reverse Light Switches **VAR** Various

FOCUS 10/98 -

Vehicle		Date	Engine	kW	OPS	BLS	TT-RF	RLS	VAR
1.4	II (DA_)	11/04-	ASDA, ASDB	59	330029	330597, 330726, 330733, 330734, 330740	330144	330263, 330603, 330611, 330751	
	II Estate (DAW_)	11/04-	ASDA, ASDB	59	330029	330597, 330726, 330733, 330734, 330740	330144	330263, 330603, 330611, 330751	
	II Saloon (DA_)	04/05-	ASDA, ASDB	59	330029	330597, 330726, 330733, 330734, 330740	330144	330263, 330603, 330611, 330751	
1.4 16V	(DAW, DBW)	10/98-11/04	FXDA, FXDB, FXDC, FXDD	55	330005	330077, 330549	330144, 330584	330263, 330525, 330526, 330611	
	Estate (DNW)	02/99-11/04	FXDA, FXDB, FXDC, FXDD	55	330005	330077, 330549	330144, 330584	330263, 330611	
	Saloon (DFW)	02/99-11/04	FXDA, FXDB, FXDC, FXDD	55	330005	330077, 330549	330144, 330584	330263, 330611	
1.6	II (DA_)	11/04-	HWDA, HWDB	74	330029	330597, 330726, 330733, 330734, 330740	330144, 330585	330263, 330603, 330611, 330751	
	II Convertible	10/06-	HWDA	74	330029	330597, 330726, 330733, 330734, 330740	330144, 330585	330263, 330603, 330751	
	II Estate (DAW_)	11/04-	HWDA, HWDB	74	330029	330597, 330726, 330733, 330734, 330740	330144, 330585	330263, 330603, 330611, 330751	
	II Saloon (DA_)	04/05-	HWDA, HWDB	74	330029	330597, 330726, 330733, 330734, 330740	330144, 330585	330263, 330603, 330611, 330751	
1.6 16V	(DAW, DBW)	10/98-11/04	FYDA, FYDB, FYDC, FYDD	74	330005	330077, 330549	330144, 330584	330263, 330525, 330526, 330602, 330611	
	Estate (DNW)	02/99-11/04	FYDA, FYDB, FYDC, FYDD	74	330005	330077, 330549	330144, 330584	330263, 330602, 330611	
	Saloon (DFW)	02/99-11/04	FYDA, FYDB, FYDC, FYDD	74	330005	330077, 330549	330144, 330584	330263, 330602, 330611	
1.6 TDCi	II (DA_)	01/05-	HHDA, HHDB	66	330026	330597, 330726, 330733, 330734, 330740	330502	330263, 330603, 330611, 330751	
	II Estate (DAW_)	11/04-	HHDA, HHDB	66	330026	330597, 330726, 330733, 330734, 330740	330502	330263, 330603, 330611, 330751	
	II Saloon (DA_)	04/05-	HHDA, HHDB	66	330026	330597, 330726, 330733, 330734, 330740	330502	330263, 330603, 330611, 330751	
	II (DA_)	11/04-	G8DA, G8DB	80	330026	330597, 330726, 330733, 330734, 330740	330502	330263, 330603, 330611, 330751	
	II Estate (DAW_)	11/04-	G8DA, G8DB	80	330026	330597, 330726, 330733, 330734, 330740	330502	330263, 330603, 330611, 330751	
	II Saloon (DA_)	04/05-	G8DA, G8DB	80	330026	330597, 330726, 330733, 330734, 330740	330502	330263, 330603, 330611, 330751	
1.6 Ti	II (DA_)	11/04-	HXDA	85	330029	330597, 330726, 330733, 330734, 330740	330144, 330585	330263, 330603, 330611, 330751	

OPS Oil Pressure Switches **BLS** Brake Light Switches **TT-RF** Temperature Transmitter and Radiator Fan Switches **RLS** Reverse Light Switches **VAR** Various

ERA S.p.A. Moncalieri (TO) Italy - tel: +39 011 6891511 - fax: +39 011 6472862 - www.eranet.it

Vehicle		Date	Engine	kW	OPS	BLS	TT-RF	RLS	VAR
1.6 Ti	II Estate (DAW_)	11/04-	HXDA	85	330029	330597, 330726, 330733, 330734, 330740	330144, 330585	330263, 330603, 330611, 330751	
	II Saloon (DA_)	04/05-	HXDA	85	330029	330597, 330726, 330733, 330734, 330740	330144, 330585	330263, 330603, 330611, 330751	
1.8	II (DA_)	03/06-	QQDB	92		330597, 330726, 330733, 330734, 330740		330611, 330751	
	II Estate (DAW_)	03/06-	Q7DA	92		330597, 330726, 330733, 330734, 330740		330611, 330751	
	II Saloon (DA_)	03/06-	QQDB	92		330597, 330726, 330733, 330734, 330740		330611, 330751	
1.8 16V	(DAW, DBW)	10/98-11/04	EYDB, EYDC, EYDD, EYDE, EYDF	85	330028	330077, 330549	330185	330263, 330525, 330526, 330602, 330611	
	Estate (DNW)	02/99-11/04	EYDB, EYDC, EYDD, EYDE, EYDF, EYDG, EYDI, EYDJ, EYDL	85	330028	330077, 330549	330185	330263, 330602, 330611	
	Saloon (DFW)	02/99-11/04	EYDB, EYDC, EYDD, EYDE, EYDF, EYDL	85	330028	330077, 330549	330185	330263, 330602, 330611	
1.8 BiFuel	Estate (DNW)	02/03-01/05	--	82			330613		
1.8 DI / TDDi	(DAW, DBW)	08/99-11/04	BHDA, BHDB	55	330028, 330029	330077, 330549		330263, 330611	
	Estate (DNW)	08/99-11/04	BHDA, BHDB	55	330028, 330029	330077, 330549		330263, 330611	
1.8 Flexifuel	II (DA_)	01/06-	Q7DA	92	330029	330597, 330726, 330733, 330734, 330740	330585	330263, 330603, 330611, 330751	
	II Estate (DAW_)	01/06-	Q7DA	92	330029	330597, 330726, 330733, 330734, 330740	330585	330263, 330603, 330611, 330751	
	II Saloon (DA_)	06/06-	Q7DA	92	330029	330597, 330726, 330733, 330734, 330740	330585	330263, 330603, 330611, 330751	
	II (DA_)	12/05-	QQDD	96		330597, 330726, 330733, 330734, 330740		330611, 330751	
	II Saloon (DA_)	12/05-	--	96		330597, 330726, 330733, 330734, 330740		330611, 330751	
	II Estate (DAW_)	12/05-	--	97		330597, 330726, 330733, 330734, 330740		330611, 330751	
1.8 TDCi	(DAW, DBW)	08/02-11/04	FFDA	74	330029	330077, 330549		330263, 330611	
	Estate (DNW)	08/02-11/04	FFDA	74	330029	330077, 330549		330263, 330611	
	Saloon (DFW)	08/02-11/04	FFDA	74	330029	330077, 330549		330263, 330611	
	(DAW, DBW)	03/01-11/04	F9DA, F9DB	85	330029	330077, 330549		330263, 330611	
	Estate (DNW)	03/01-11/04	F9DA, F9DB	85	330029	330077, 330549		330263, 330611	
	II (DA_)	01/05-	KKDA	85	330029	330597, 330726, 330733, 330734, 330740		330263, 330603, 330611, 330751	

OPS Oil Pressure Switches **BLS** Brake Light Switches **TT-RF** Temperature Transmitter and Radiator Fan Switches **RLS** Reverse Light Switches **VAR** Various

Vehicle		Date	Engine	kW	OPS	BLS	TT-RF	RLS	VAR
1.8 TDCi	II Estate (DAW_)	11/04-	KKDA	85	330029	330597, 330726, 330733, 330734, 330740		330263, 330603, 330611, 330751	
	II Saloon (DA_)	04/05-	KKDA	85	330029	330597, 330726, 330733, 330734, 330740		330263, 330603, 330611, 330751	
	Saloon (DFW)	03/01-11/04	F9DA, F9DB	85	330029	330077, 330549		330263, 330611	
1.8 Turbo DI / TDDi	Saloon (DFW)	08/01-03/05	BHDA	55				330611	
	(DAW, DBW)	10/98-11/04	C9DA, C9DB, C9DC	66	330028, 330029	330077, 330549		330263, 330525, 330526, 330611	
	Estate (DNW)	02/99-11/04	C9DA, C9DB, C9DC	66	330028, 330029	330077, 330549		330263, 330611	
	Saloon (DFW)	02/99-11/04	C9DA, C9DB, C9DC	66	330028, 330029	330077, 330549		330263, 330611	
2.0	II (DA_)	11/04-	AODA, AODB	107	330029	330597, 330726, 330733, 330734, 330740	330585	330263, 330603, 330611, 330751	
	II Convertible	10/06-	AODA	107	330029	330597, 330726, 330733, 330734, 330740	330585	330263, 330593, 330603, 330611, 330751	
	II Estate (DAW_)	11/04-	AODA, AODB	107	330029	330597, 330726, 330733, 330734, 330740	330585	330263, 330603, 330611, 330751	
	II Saloon (DA_)	04/05-	AODA, AODB	107	330029	330597, 330726, 330733, 330734, 330740	330585	330263, 330603, 330611, 330751	
2.0 16V	(DAW, DBW)	10/98-11/04	EDDB, EDDC, EDDD, EDDF	96	330028	330077, 330549	330185	330263, 330525, 330526, 330602, 330611	
	Estate (DNW)	02/99-11/04	EDDB, EDDC, EDDD, EDDF	96	330028	330077, 330549	330185	330263, 330602, 330611	
	Saloon (DFW)	02/99-11/04	EDDB, EDDC, EDDD, EDDF	96	330028	330077, 330549	330185	330263, 330602, 330611	
2.0 CNG	II (DA_)	04/09-	SYDA	107		330597, 330726, 330733, 330734		330611, 330751	
2.0 LPG	II (DA_)	06/08-	SYDA	107		330597, 330726, 330733, 330734		330611, 330751	
	II Estate (DAW_)	06/08-	SYDA	107		330597, 330726, 330733, 330734		330611, 330751	
2.0 TDCi	II (DA_)	02/08-	IXDA	81		330597, 330726, 330733, 330734		330593, 330611, 330751	
	II Estate (DAW_)	02/08-	IXDA	81		330597, 330726, 330733, 330734		330593, 330611, 330751	
	II Saloon (DA_)	02/08-	IXDA	81		330597, 330726, 330733, 330734		330593, 330611, 330751	
	II (DA_)	11/04-	G6DA, G6DB	100	330026	330597, 330726, 330733, 330734, 330740	330502	330263, 330603, 330611, 330751	
	II Convertible	10/06-	G6DA	100	330026	330597, 330726, 330733, 330734, 330740	330502	330263, 330603, 330751	
	II Estate (DAW_)	11/04-	G6DA, G6DB	100	330026	330597, 330726, 330733, 330734, 330740	330502	330263, 330603, 330611, 330751	
	II Saloon (DA_)	04/05-	G6DA, G6DB	100	330026	330597, 330726, 330733, 330734, 330740	330502	330263, 330603, 330611, 330751	

OPS Oil Pressure Switches **BLS** Brake Light Switches **TT-RF** Temperature Transmitter and Radiator Fan Switches **RLS** Reverse Light Switches **VAR** Various

ERA S.p.A. Moncalieri (TO) Italy - tel: +39 011 6891511 - fax: +39 011 6472862 - www.eranet.it

Vehicle		Date	Engine	kW	OPS	BLS	TT-RF	RLS	VAR
2.5 RS	II (DA_)	01/09-	JZDA	224		330597, 330726, 330733, 330734		330611, 330751	
2.5 ST	II (DA_)	10/05-	HYDA	166	330351	330597, 330726, 330733, 330734, 330740		330263, 330603, 330611, 330751	
RS	(DAW, DBW)	10/02-11/04	HMDA	158	330028	330077, 330549	330185	330263, 330611	
ST170	(DAW, DBW)	03/02-11/04	ALDA	127	330028	330077, 330549	330185, 330585	330263, 330611	
	Estate (DNW)	08/02-11/04	ALDA	127	330028	330077, 330549	330185, 330585	330263, 330611	
FOCUS C-MAX		**10/03 - 03/07**							
1.6		10/03-03/07	HWDA	74	330029	330597, 330726, 330734, 330740	330144, 330585	330263, 330603, 330611, 330751	
1.6 TDCi		02/05-03/07	HHDA, HHDB	66	330026	330597, 330726, 330734, 330740	330502	330263, 330603, 330611, 330751	
		10/03-03/07	G8DA	80	330026	330597, 330726, 330734, 330740	330502	330263, 330603, 330611, 330751	
1.6 Ti		08/04-03/07	HXDA	85	330029	330597, 330726, 330734, 330740	330144, 330585	330263, 330603, 330611, 330751	
1.8		10/03-03/07	CSDA, CSDB	88	330029	330597, 330726, 330734, 330740	330585, 330640	330263, 330603, 330611, 330751	
		04/04-03/07	Q7DA, QQDA, QQDB	92	330029	330597, 330726, 330734, 330740	330585, 330640	330263, 330603, 330611, 330751	
1.8 Flexifuel		01/06-03/07	Q7DA	92	330029	330597, 330726, 330734, 330740	330585, 330640	330263, 330603, 330611, 330751	
1.8 TDCi		01/05-03/07	KKDA	85	330029	330597, 330726, 330734, 330740		330263, 330603, 330611, 330751	
2.0		03/04-03/07	AODA, AODB	107	330029	330597, 330726, 330734, 330740	330585, 330640	330263, 330603, 330611, 330751	
2.0 TDCi		10/03-03/07	G6DD	100	330026	330597, 330726, 330734, 330740	330502	330263, 330603, 330611, 330751	
FUSION		**08/02 -**							
1.25	(JU_)	08/04-	FUJA, FUJB	55	330005	330077, 330549, 330597, 330734	330144, 330585	330263	
1.3	(JU_)	11/02-	--	44	330028	330077, 330549, 330597, 330734	330586	330263	
1.4	(JU_)	08/02-	FXJA, FXJB	59	330005	330077, 330549, 330597, 330734	330144, 330585	330263, 330592, 330751	
1.4 TDCi	(JU_)	08/02-	F6JA	50	330026	330077, 330549, 330597, 330734	330502	330263, 330592, 330751	
1.6	(JU_)	08/02-	FYJA	74	330005	330077, 330549, 330597, 330734	330144, 330585	330263	
1.6 TDCi	(JU_)	11/04-	HHJA, HHJB	66	330026	330597, 330734	330502	330263	
GALAXY		**03/95 -**							
1.8 TDCi		05/06-	FFWA	74	330029	330597, 330726, 330733, 330734, 330740		330603, 330611	
		05/06-	QYWA	92	330029	330597, 330726, 330733, 330734, 330740		330603, 330611	
1.9 TDI	(WGR)	03/95-05/06	1Z, AHU, ANU	66	330321, 330325, 330341, 330342	330440, 330705, 330706, 330725	330123, 330141, 330280, 330287, 330496, 330546	330544, 330579	

OPS Oil Pressure Switches **BLS** Brake Light Switches **TT-RF** Temperature Transmitter and Radiator Fan Switches **RLS** Reverse Light Switches **VAR** Various

Vehicle		Date	Engine	kW	OPS	BLS	TT-RF	RLS	VAR
1.9 TDI	(WGR)	08/97-04/00	AFN, AVG	81	330341, 330342	330440, 330705, 330706	330123, 330162, 330163, 330164, 330287, 330288	330544	
	(WGR)	04/00-05/06	AUY	85	330325	330706, 330725	330141, 330280, 330496, 330546	330544, 330579	
	(WGR)	02/03-05/06	ASZ	96	330325	330725	330280, 330546	330544, 330579	
	(WGR)	05/05-05/06	BTB	110	330325	330725	330280, 330546	330544, 330579	
2.0		05/06-	AOWB	107	330029	330597, 330726, 330733, 330734, 330740	330585, 330640	330603, 330611	
2.0 Flexifuel		05/06-	TBWA	107		330726, 330733, 330734, 330740			
2.0 i	(WGR)	11/95-05/06	NSE, ZVSA	85	330005	330440	330125, 330144, 330163, 330164, 330550, 330613	330579	
2.0 SCTi		03/10-	TNWA	149		330726, 330733, 330734			
2.0 TDCi		11/07-	TYWA	85	330026	330597, 330726, 330733, 330734, 330740	330502	330603, 330611	
		05/06-	AZWA	96	330026	330597, 330726, 330733, 330734, 330740	330502	330603, 330611	
		05/06-	QXWA	103	330026	330597, 330726, 330733, 330734, 330740	330502	330603, 330611	
		03/10-	--	120		330726, 330733, 330734			
2.2 TDCi		03/08-	Q4BA	129	330026	330597, 330726, 330733, 330734	330502	330603, 330611	
2.3		07/07-	SEWA	118	330029	330597, 330726, 330733, 330734	330585, 330640	330603, 330611	
2.3 16V	(WGR)	09/01-05/06	E5SB	103	330005	330440	330144, 330613	330579	
	(WGR)	01/97-05/06	E5SA, Y5B	107	330005	330440	330125, 330144, 330163, 330550, 330613	330579	
2.8 i V6	(WGR)	11/95-04/00	AAA, AMY	128	330318, 330322, 330324, 330342	330440	330103, 330123, 330151, 330152, 330164, 330280, 330286, 330550		
2.8 i V6 4x4	(WGR)	04/96-04/00	AAA, AMY	128	330318, 330322, 330324, 330342	330440	330103, 330123, 330151, 330152, 330164, 330280, 330286, 330550		
2.8 V6	(WGR)	04/00-05/06	AYL	150	330324	330706, 330725	330280, 330546, 330550	330544, 330579	
GRANADA			**08/77 - 08/85**						
2.5 D	(GU)	08/82-08/85	STP	51			330183		
	Estate (GNU)	08/82-08/85	STP	51			330183		
KA			**09/96 -**						
1.2		10/08-	FP4	51		330517			
1.3 i	(RB_)	06/98-11/08	JJD, JJF, JJG, JJH, JJL	36	330005	330066	330119, 330144	330263	

OPS Oil Pressure Switches **BLS** Brake Light Switches **TT-RF** Temperature Transmitter and Radiator Fan Switches **RLS** Reverse Light Switches **VAR** Various

ERA S.p.A. Moncalieri (TO) Italy - tel: +39 011 6891511 - fax: +39 011 6472862 - www.eranet.it

Vehicle		Date	Engine	kW	OPS	BLS	TT-RF	RLS	VAR
1.3 i	(RB_)	09/96-10/02	JJB	37	330005	330066	330119, 330144	330263	
	(RB_)	09/96-11/08	BAA, J4D, J4K, J4M, J4N, J4P, J4S	44	330005, 330028	330066	330119, 330144, 330586	330263	
	(RB_)	08/02-11/08	A9A, A9B	51	330028	330066	330586	330263	
1.3 TDCi		10/08-	FD4	55		330517			
1.6 i	(RB_)	07/03-11/08	CDB, CDC	70	330028	330066	330586	330263	
KUGA			**03/08 -**						
2.0 TDCi		03/08-	G6DG	100	330026	330597, 330726, 330733, 330734	330502		
		03/10-	UFDA	103		330726, 330733, 330734			
2.0 TDCi 4x4		03/08-	G6DG	100	330026	330597, 330726, 330733, 330734	330502		
		03/10-	UFDA	103		330726, 330733, 330734			
		03/10-	--	120		330726, 330733, 330734			
2.5 4x4		03/09-	HYDB	147		330597, 330726, 330733, 330734			
MAVERICK			**02/93 -**						
2.0 16V		02/01-	YF	91	330028				
2.3 16V		03/04-	GZ	110	330029			330746	
2.4 i	(UDS, UNS)	09/96-04/98	KA-24	85	330359	330044			
	(UDS, UNS)	09/96-04/98	KA-24	87	330359	330044			
	(UDS, UNS)	02/93-08/96	KA24-E	91	330359	330044	330655		
2.7 TD	(UDS, UNS)	02/93-08/96	TD27	74	330359	330044	330691		
	(UDS, UNS)	09/96-04/98	TD27E	92	330359	330044			
3.0 V6 24V		02/01-	AJ	145	330623		330585	330746	
		03/04-	AJ	149	330623		330585	330746	
MONDEO			**01/93 -**						
1.6 i	II (BAP)	09/96-11/00	L1J	66	330005, 330028, 330595	330077, 330549	330125, 330144, 330550, 330585, 330608, 330613, 330640	330602, 330611	
	II Estate (BNP)	09/96-11/00	L1J	66	330005, 330028	330077, 330549	330125, 330144, 330550, 330585, 330608, 330613, 330640	330611	
	II Saloon (BFP)	09/96-11/00	L1J	66	330005, 330028	330077, 330549	330125, 330144, 330550, 330585, 330608, 330613, 330640	330601, 330602, 330611	
1.6 i 16V	I (GBP)	07/94-08/96	L1J	65	330005	330079, 330549	330125, 330144, 330550, 330608, 330613	330601	
	I Estate (BNP)	07/94-08/96	L1J	65	330005	330079, 330549	330125, 330144, 330550, 330608, 330613	330601	

OPS Oil Pressure Switches **BLS** Brake Light Switches **TT-RF** Temperature Transmitter and Radiator Fan Switches **RLS** Reverse Light Switches **VAR** Various

Vehicle		Date	Engine	kW	OPS	BLS	TT-RF	RLS	VAR
1.6 i 16V	I Saloon (GBP)	07/94-08/96	L1J	65	330005	330079, 330549	330125, 330144, 330550, 330608, 330613	330601	
	I (GBP)	02/93-08/96	L1F	66	330005	330079, 330549	330125, 330144, 330550, 330613	330601	
	I Estate (BNP)	04/93-08/96	L1F	66	330005	330079, 330549	330125, 330144, 330550, 330613	330601	
	I Saloon (GBP)	02/93-08/96	L1F	66	330005	330079, 330549	330125, 330144, 330550, 330613	330601	
	II (BAP)	05/98-11/00	L1L, L1N, L1Q	70	330028, 330595	330077, 330549	330125, 330144, 330550, 330585, 330605, 330607, 330609, 330640	330601, 330602, 330611	
	II Estate (BNP)	05/98-11/00	L1L, L1N, L1Q	70	330028	330077, 330549	330125, 330144, 330550, 330585, 330605, 330640	330601, 330611	
	II Saloon (BFP)	05/98-11/00	L1L, L1N, L1Q	70	330028	330077, 330549	330125, 330144, 330550, 330585, 330605, 330607, 330640	330601, 330602, 330611	
1.6 Ti	IV	03/07-	RHBA	81	330029	330597, 330621, 330726, 330733, 330734	330585	330603, 330604, 330611, 330751	
	IV Saloon	03/07-	RHBA	81		330726, 330733, 330734		330751	
	IV Turnier	03/07-	RHBA	81	330029	330597, 330621, 330726, 330733, 330734	330585	330603, 330604, 330611, 330751	
	IV	03/07-	PNBA	92	330029	330597, 330621, 330726, 330733, 330734	330585	330603, 330604, 330611, 330751	
	IV Turnier	03/07-	PNBA	92	330029	330597, 330621, 330726, 330733, 330734	330585	330603, 330604, 330611, 330751	
1.8 4x4	I Saloon (GBP)	02/93-08/96	RKA	85			330613		
1.8 16V	III (B5Y)	11/00-08/07	CGBA, CGBB	81	330029	330077, 330549	330607, 330640	330611	
	III Estate (BWY)	11/00-08/07	CGBA, CGBB	81	330029	330077, 330549	330640	330611	
	III Saloon (B4Y)	11/00-08/07	CGBA, CGBB	81	330029	330077, 330549	330607, 330640	330611	
	III (B5Y)	11/00-08/07	CHBA, CHBB	92	330029	330077, 330549	330607, 330640	330611	
	III Estate (BWY)	11/00-08/07	CHBA, CHBB	92	330029	330077, 330549	330640	330611	
	III Saloon (B4Y)	11/00-08/07	CHBA, CHBB	92	330029	330077, 330549	330607, 330640	330611	
1.8 i	II (BAP)	09/96-11/00	RKB, RKF, RKH, RKJ, RKK	85	330005, 330028, 330595	330077, 330549	330125, 330144, 330550, 330585, 330608, 330613, 330640	330601, 330602, 330611	
	II Estate (BNP)	09/96-11/00	RKB, RKF, RKH, RKJ, RKK	85	330005, 330028	330077, 330549	330125, 330144, 330550, 330585, 330608, 330613, 330640	330601, 330611	
	II Saloon (BFP)	09/96-11/00	RKB, RKF, RKH, RKJ, RKK	85	330005, 330028	330077, 330549	330125, 330144, 330550, 330585, 330608, 330613, 330640	330601, 330602, 330611	
1.8 i 16V	I (GBP)	07/94-08/96	RKB	82	330005	330079, 330549	330125, 330144, 330550, 330608, 330613	330601, 330602	

OPS Oil Pressure Switches **BLS** Brake Light Switches **TT-RF** Temperature Transmitter and Radiator Fan Switches **RLS** Reverse Light Switches **VAR** Various

ERA S.p.A. Moncalieri (TO) Italy - tel: +39 011 6891511 - fax: +39 011 6472862 - www.eranet.it

Vehicle		Date	Engine	kW	OPS	BLS	TT-RF	RLS	VAR
1.8 i 16V	I Estate (BNP)	07/94-08/96	RKB	82	330005	330079, 330549	330125, 330144, 330550, 330608, 330613	330601	
	I Saloon (GBP)	01/94-08/96	RKB	82	330005	330079, 330549	330125, 330144, 330550, 330608, 330613	330601, 330602	
	I (GBP)	02/93-08/96	RKA	85	330005	330079, 330549	330125, 330144, 330550	330601, 330602	
	I Estate (BNP)	04/93-08/96	RKA	85	330005	330079, 330549	330125, 330144, 330550, 330613	330601	
	I Saloon (GBP)	02/93-08/96	RKA	85	330005	330079, 330549	330125, 330144, 330550, 330613	330601, 330602	
1.8 i 16V 4x4	I (GBP)	02/93-08/96	RKA	85	330005	330079, 330549	330125, 330144, 330550, 330613	330601, 330602	
	I Estate (BNP)	04/93-08/96	RKA	85	330005	330079, 330549	330125, 330144, 330550, 330613	330601	
1.8 SCi	III (B5Y)	06/03-08/07	CFBA	96	330029	330077, 330549	330640	330611	
	III Estate (BWY)	06/03-08/07	CFBA	96	330029	330077, 330549	330640	330611	
	III Saloon (B4Y)	06/03-08/07	CFBA	96	330029	330077, 330549	330640	330611	
1.8 TD	I (GBP)	06/93-08/96	RFM, RFN	65	330005	330078, 330079, 330549	330113, 330182, 330229, 330550	330601	
	I Estate (BNP)	06/93-08/96	RFM, RFN	65	330005	330078, 330079, 330549	330113, 330182, 330229, 330550	330601	
	I Saloon (GBP)	06/93-08/96	RFM, RFN	65	330005	330078, 330079, 330549	330113, 330182, 330229, 330550	330601	
	I (GBP)	10/95-08/96	RFM, RFN	66	330005	330078, 330079, 330549	330113, 330182, 330229, 330550	330601	
	I Estate (BNP)	11/95-08/96	RFM, RFN	66	330005	330078, 330079, 330549	330113, 330182, 330229, 330550	330601	
	I Saloon (GBP)	10/95-08/96	RFM, RFN	66	330005	330078, 330079, 330549	330113, 330182, 330229, 330550	330601	
	II (BAP)	09/96-11/00	RFN	66	330005, 330595	330077, 330549	330113, 330144, 330182, 330229, 330550, 330606	330601, 330611	
	II Estate (BNP)	09/96-11/00	RFN	66	330005	330077, 330549	330113, 330144, 330182, 330229, 330550, 330606	330601, 330611	
	II Saloon (BFP)	09/96-11/00	RFN	66	330005	330077, 330549	330113, 330144, 330182, 330229, 330550, 330606	330601, 330611	
1.8 TDCi	IV	03/07-	FFBA	74	330029	330597, 330621, 330726, 330733, 330734		330603, 330604, 330611, 330751	
	IV Saloon	03/07-	FFBA	74		330726, 330733, 330734		330751	
	IV Turnier	03/07-	FFBA	74	330029	330597, 330621, 330726, 330733, 330734		330603, 330604, 330611, 330751	
	IV	06/07-	KHBA, QYBA	92		330597, 330726, 330733, 330734		330611, 330751	
	IV Saloon	06/07-	KHBA, QYBA	92		330726, 330733, 330734		330751	
	IV Turnier	06/07-	KHBA, QYBA	92		330726, 330733, 330734		330751	

OPS Oil Pressure Switches **BLS** Brake Light Switches **TT-RF** Temperature Transmitter and Radiator Fan Switches **RLS** Reverse Light Switches **VAR** Various

Vehicle		Date	Engine	kW	OPS	BLS	TT-RF	RLS	VAR
2.0	IV	03/07-	AOBA	107	330029	330597, 330621, 330726, 330733, 330734	330585, 330640	330611, 330751	
	IV Saloon	03/07-	AOBA	107	330029	330597, 330621, 330726, 330733, 330734	330585, 330640	330611, 330751	
	IV Turnier	03/07-	AOBA	107	330029	330597, 330621, 330726, 330733, 330734	330585, 330640	330611, 330751	
2.0 16V	III (B5Y)	11/00-08/07	CJBA, CJBB	107	330029	330077, 330549	330607, 330640	330611	
	III Estate (BWY)	11/00-08/07	CJBA, CJBB	107	330029	330077, 330549	330640	330611	
	III Saloon (B4Y)	11/00-08/07	CJBA, CJBB	107	330029	330077, 330549	330607, 330640	330611	
2.0 16V DI / TDDi / TDCi	III (B5Y)	11/00-08/07	D5BA, SDBA	66	330028	330077, 330549		330611	
	III Estate (BWY)	11/00-08/07	D5BA, SDBA	66	330028	330077, 330549		330611	
	III Saloon (B4Y)	11/00-08/07	D5BA, SDBA	66	330028	330077, 330549		330611	
2.0 16V TDDi / TDCi	III (B5Y)	11/00-08/07	D6BA, HJBA, HJBB, HJBC	85	330028	330077, 330549		330611	
	III Estate (BWY)	11/00-08/07	D6BA, HJBA, HJBB, HJBC	85	330028	330077, 330549		330611	
	III Saloon (B4Y)	11/00-08/07	D6BA, HJBA, HJBB, HJBC	85	330028	330077, 330549		330611	
2.0 Flexifuel	IV	03/07-	TBBA	107	330029	330597, 330621, 330726, 330733, 330734	330585, 330640	330611, 330751	
	IV Saloon	03/07-	TBBA	107		330597, 330726, 330733, 330734	330640	330611, 330751	
	IV Turnier	03/07-	TBBA	107		330597, 330621, 330726, 330733, 330734	330640	330611, 330751	
2.0 i	II (BAP)	09/96-11/00	NGA, NGB, NGC, NGD	96	330005, 330028, 330595	330077, 330549	330125, 330144, 330550, 330585, 330608, 330613, 330640	330601, 330602, 330611	
	II Estate (BNP)	09/96-11/00	NGA, NGB, NGC, NGD	96	330005, 330028	330077, 330549	330125, 330144, 330550, 330585, 330608, 330613, 330640	330601, 330611	
	II Saloon (BFP)	09/96-11/00	NGA, NGB, NGC, NGD	96	330005, 330028	330077, 330549	330125, 330144, 330550, 330585, 330608, 330613, 330640	330601, 330602, 330611	
2.0 i 16V	I (GBP)	12/94-08/96	NGA	97		330704	330550, 330613		
	I Estate (BNP)	01/93-08/96	NGA	97		330704	330550		
	I (GBP)	02/93-08/96	NGA	100	330005	330079, 330549, 330704	330125, 330144, 330550, 330613	330601	
	I Estate (BNP)	04/93-08/96	NGA	100	330005	330079, 330549, 330704	330125, 330144, 330550, 330613	330601	
	I Saloon (GBP)	02/93-08/96	NGA	100	330005	330079, 330549, 330704	330125, 330144, 330550, 330613	330601	
2.0 i 16V 4x4	I (GBP)	12/94-08/96	NGA	97	330005	330079, 330549, 330704	330125, 330144, 330550, 330608, 330613	330601	
	I Estate (BNP)	12/94-08/96	NGA	97	330005	330079, 330549, 330704	330125, 330144, 330550, 330608, 330613	330601	

OPS Oil Pressure Switches **BLS** Brake Light Switches **TT-RF** Temperature Transmitter and Radiator Fan Switches **RLS** Reverse Light Switches **VAR** Various

ERA S.p.A. Moncalieri (TO) Italy - tel: +39 011 6891511 - fax: +39 011 6472862 - www.eranet.it

Vehicle		Date	Engine	kW	OPS	BLS	TT-RF	RLS	VAR
2.0 i 16V 4x4	I Saloon (GBP)	12/94-08/96	NGA	97	330005	330079, 330549, 330704	330125, 330144, 330550, 330608, 330613	330601	
	I Estate (BNP)	04/93-08/96	NGA	100	330005	330079, 330549, 330704	330125, 330144, 330550, 330613	330601	
2.0 SCTi	IV	03/10-	TNBA	149		330726, 330733, 330734		330751	
	IV Turnier	03/10-	TNBA	149		330726, 330733, 330734		330751	
2.0 TDCi	IV	11/07-	KLBA	85	330026	330597, 330621, 330726, 330733, 330734	330502	330603, 330604, 330611, 330751	
	IV Saloon	11/07-	KLBA	85	330026	330597, 330621, 330726, 330733, 330734	330502	330603, 330604, 330611, 330751	
	IV Turnier	11/07-	KLBA	85	330026	330597, 330621, 330726, 330733, 330734	330502	330603, 330604, 330611, 330751	
	III (B5Y)	02/03-06/05	--	92	330028	330077, 330549		330611	
	III Saloon (B4Y)	02/03-06/05	--	92	330028	330077, 330549		330611	
	III (B5Y)	10/01-08/07	FMBA, N7BA	96	330028	330077, 330549		330611	
	III Estate (BWY)	10/01-08/07	FMBA, N7BA	96	330028	330077, 330549		330611	
	III Saloon (B4Y)	10/01-08/07	FMBA, N7BA	96	330028	330077, 330549		330611	
	IV	03/07-	AZBA	96	330026	330597, 330621, 330726, 330733, 330734	330502	330611, 330751	
	IV Saloon	03/07-	AZBA	96	330026	330597, 330621, 330726, 330733, 330734	330502	330611, 330751	
	IV Turnier	03/07-	AZBA	96	330026	330597, 330621, 330726, 330733, 330734	330502	330611, 330751	
	IV	03/07-	QXBB	103	330026	330597, 330621, 330726, 330733, 330734	330502	330611, 330751	
	IV Saloon	03/07-	QXBB	103	330026	330597, 330621, 330726, 330733, 330734	330502	330611, 330751	
	IV Turnier	03/07-	QXBB	103	330026	330597, 330621, 330726, 330733, 330734	330502	330611, 330751	
	IV	03/10-	TXBA	120		330726, 330733, 330734		330751	
	IV Turnier	03/10-	TXBA	120		330726, 330733, 330734		330751	
2.2 TDCi	III (B5Y)	09/04-08/07	QJBA, QJBB	114	330028	330077, 330549		330611	
	III Estate (BWY)	09/04-08/07	QJBA, QJBB	114	330028	330077, 330549		330611	
	III Saloon (B4Y)	09/04-08/07	QJBA, QJBB	114	330028	330077, 330549		330611	
	IV	03/08-	Q4BA	129	330026	330597, 330621, 330726, 330733, 330734	330502	330603, 330604, 330611, 330751	
	IV Saloon	03/08-	Q4BA	129	330026	330597, 330621, 330726, 330733, 330734	330502	330603, 330604, 330611, 330751	

OPS Oil Pressure Switches **BLS** Brake Light Switches **TT-RF** Temperature Transmitter and Radiator Fan Switches **RLS** Reverse Light Switches **VAR** Various

Vehicle		Date	Engine	kW	OPS	BLS	TT-RF	RLS	VAR
2.2 TDCi	IV Turnier	03/08-	Q4BA	129	330026	330597, 330621, 330726, 330733, 330734	330502	330603, 330604, 330611, 330751	
2.3	IV	07/07-	SEBA	118	330029	330597, 330621, 330726, 330733, 330734	330640	330603, 330604, 330611, 330751	
	IV Saloon	07/07-	SEBA	118	330029	330597, 330621, 330726, 330733, 330734	330640	330603, 330604, 330611, 330751	
	IV Turnier	07/07-	SEBA	118	330029	330597, 330621, 330726, 330733, 330734	330640	330603, 330604, 330611, 330751	
2.5	IV	03/07-	HUBA	162		330597, 330621, 330726, 330733, 330734		330611, 330751	
	IV Saloon	03/07-	HUBA	162		330597, 330621, 330726, 330733, 330734		330611, 330751	
	IV Turnier	03/07-	HUBA	162		330597, 330621, 330726, 330733, 330734		330611, 330751	
2.5 24V	II (BAP)	09/96-11/00	SEA	125	330595	330077, 330549	330144, 330550, 330608	330611	
	II (BAP)	06/00-11/00	SEB	125	330595	330077, 330549	330144, 330550, 330605, 330609	330611	
	II Estate (BNP)	09/96-11/00	SEA	125		330077, 330549	330144, 330550, 330608	330611	
	II Estate (BNP)	10/99-11/00	SEB	125		330077, 330549	330144, 330550, 330605	330611	
	II Saloon (BFP)	09/96-11/00	SEA	125		330077, 330549	330144, 330550, 330608	330611	
	II Saloon (BFP)	06/00-11/00	SEB	125		330077, 330549	330144, 330550, 330605	330611	
2.5 i 24V	I (GBP)	07/94-08/96	SEA	125	330005		330144, 330550, 330608		
	I Estate (BNP)	07/94-08/96	SEA	125	330005		330144, 330550, 330608		
	I Saloon (GBP)	07/94-08/96	SEA	125	330005		330144, 330550, 330608		
2.5 ST 200	II (BAP)	05/99-11/00	SGA	151	330595, 330623	330077, 330549	330144, 330550, 330605, 330609	330611	
	II Estate (BNP)	05/99-11/00	SGA	151	330623	330077, 330549	330144, 330550, 330605	330611	
	II Saloon (BFP)	05/99-11/00	SGA	151	330623	330077, 330549	330144, 330550, 330605	330611	
2.5 V6 24V	III (B5Y)	11/00-08/07	LCBD	125		330077, 330549	330585	330611	
	III Estate (BWY)	11/00-08/07	LCBD	125		330077, 330549	330585	330611	
	III Saloon (B4Y)	11/00-08/07	LCBD	125		330077, 330549	330585, 330607	330611	
3.0 V6 24V	III (B5Y)	09/04-08/07	REBA	150		330077, 330549	330585	330611	
	III Estate (BWY)	09/04-08/07	REBA	150		330077, 330549	330585	330611	
	III Saloon (B4Y)	09/04-08/07	REBA	150		330077, 330549	330585	330611	
ST220	III (B5Y)	04/02-08/07	MEBA	166		330077, 330549	330585	330611	
	III Estate (BWY)	04/02-08/07	MEBA	166		330077, 330549	330585	330611	
	III Saloon (B4Y)	04/02-08/07	MEBA	166		330077, 330549	330585	330611	

OPS Oil Pressure Switches **BLS** Brake Light Switches **TT-RF** Temperature Transmitter and Radiator Fan Switches **RLS** Reverse Light Switches **VAR** Various

ERA S.p.A. Moncalieri (TO) Italy - tel: +39 011 6891511 - fax: +39 011 6472862 - www.eranet.it

Vehicle		Date	Engine	kW	OPS	BLS	TT-RF	RLS	VAR
ORION		**07/83 - 10/94**							
1.3	II (AFF)	12/85-07/90	JBB, JLA, JLB	44	330005		330088, 330091, 330096, 330101, 330119, 330168, 330303, 330550		
	III (GAL)	07/90-12/93	J4B, J6A	44	330005	330066	330119, 330144, 330185, 330550	330250	
	I (AFD)	07/83-03/86	JPA	51	330005		330096, 330303		
	II (AFF)	11/86-07/88	--	51	330005		330088, 330091, 330096, 330101, 330119, 330168, 330303, 330550		
1.4	II (AFF)	03/86-07/90	FUAA	52			330550		
	III (GAL)	07/90-12/93	F6F, F6G	52	330005	330066	330101, 330119, 330185, 330211, 330550, 330622	330250	
	II (AFF)	01/86-07/90	FUC	54			330550		
	III (GAL)	07/90-12/93	FUH	54			330550		
	II (AFF)	12/85-07/90	FUA	55			330550		
1.4 CAT	II (AFF)	02/87-07/90	F6B, F6D	54	330005		330113, 330550	330232	
1.6	II (AFF)	12/85-07/90	LUC	66			330550		
	III (GAL)	07/90-12/92	LUJ, LUK	66	330005	330066	330101, 330119, 330185, 330211, 330550	330250	
1.6 i	II (AFF)	08/89-07/90	LJB	75			330550		
	I (AFD)	07/83-03/86	LR1, LRA	77	330005		330096, 330303		
	II (AFF)	03/86-07/90	LRB	77	330005		330101, 330182, 330550		
	III (GAL)	07/90-09/92	LJF	77	330005	330066	330101, 330119, 330185, 330211, 330550, 330622	330250	
1.6 i 16V	III (GAL)	07/92-12/93	L1E, L1K	66	330005	330066	330125, 330185, 330211, 330550	330250	
1.6 i CAT	II (AFF)	03/86-07/90	L4B	66			330550		
1.8 D	II (AFF)	01/89-07/90	RTA, RTB	44	330005	330033	330101, 330182, 330550	330441	
	III (GAL)	11/90-12/93	RTE, RTF, RTH	44	330005	330066	330113, 330182, 330229, 330550, 330591	330250	
1.8 i 16V	III (GAL)	02/92-12/93	RDA	77	330005	330066	330125, 330185, 330211, 330613	330250	
	III (GAL)	01/92-12/93	RQB	96	330005	330066	330125, 330185, 330211	330250	
1.8 TD	III (GAL)	03/92-12/93	RFD, RFK	66	330005	330066	330113, 330229, 330591	330250	
P 100		**10/87 - 12/92**							
1.8 TD	II	10/87-12/92	RFA	55	330005		330113, 330182, 330185	330232	
2.0	II	10/87-	NAE	57	330005		330088	330232	

OPS Oil Pressure Switches **BLS** Brake Light Switches **TT-RF** Temperature Transmitter and Radiator Fan Switches **RLS** Reverse Light Switches **VAR** Various

Vehicle		Date	Engine	kW	OPS	BLS	TT-RF	RLS	VAR
PUMA			**03/97 - 06/02**						
1.4 16V	(EC_)	11/97-10/00	FHD, FHF	66	330005	330066	330119, 330144	330263	
1.6 16V	(EC_)	08/00-	L1W	76	330005	330066	330119, 330144, 330584	330263	
1.7 16V	(EC_)	03/97-	MHA, MHB	92	330005	330066	330119, 330144	330263	
RANGER			**06/99 -**						
1.8	(TU_)	06/99-02/02	--	85		330081			
2.5 D	(TU_)	10/99-04/02	WL	57	330009, 330567	330081	330130		
2.5 D 4x4	(TU_)	10/99-04/02	WL	57	330009, 330567	330081	330130		
2.5 TD	(TU_)	04/02-	--	62	330009, 330567	330081	330130		
2.5 TD 4x4	(TU_)	04/02-	--	62	330009, 330567	330081	330130		
	(TU_)	10/99-	WL-T	80	330009, 330567	330081	330130		
2.5 TDdi	(TU_)	04/02-09/05	--	86	330009, 330567	330081	330130		
	(TU_)	05/05-	--	105		330081			
2.5 TDdi 4x4	(TU_)	04/02-09/05	--	86	330009, 330567	330081	330130		
2.5 TDdi 4x4	(TU_)	05/05-	--	105		330081			
2.6	(TU_)	10/02-09/04	--	80	330008	330081			
2.9 D	(TU_)	06/99-02/02	--	70		330081			
3.0 TDCi	(TU_)	05/05-	--	115	330009, 330567	330081			
3.0 TDCi 4x4	(TU_)	05/05-	--	115	330009, 330567	330081			
4.0	(TU_)	10/05-	--	152		330081	330585		
4.0 4x4	(TU_)	10/05-	--	152		330081	330585		
S-MAX			**05/06 -**						
1.8 TDCi		01/07-	FFWA	74		330726, 330733, 330734, 330740			
		05/06-	QYWA	92	330029	330597, 330726, 330733, 330734, 330740		330603, 330604, 330611	
2.0		05/06-	AOWA	107	330029	330597, 330726, 330733, 330734, 330740	330585, 330640	330603, 330604, 330611	
2.0 Flexifuel		05/06-	TBWA	107	330029	330597, 330726, 330733, 330734, 330740	330585, 330640	330611	
2.0 SCTi		03/10-	TNWA	149		330726, 330733, 330734			
2.0 TDCi		11/07-	KLWA	85	330026	330597, 330726, 330733, 330734, 330740	330502	330603, 330604, 330611	
		05/06-	AZWA	96	330026	330597, 330726, 330733, 330734, 330740	330502	330603, 330604, 330611	
		05/06-	QXWA	103	330026	330597, 330726, 330733, 330734, 330740	330502	330603, 330604, 330611	
		03/10-	--	120		330726, 330733, 330734			

OPS Oil Pressure Switches **BLS** Brake Light Switches **TT-RF** Temperature Transmitter and Radiator Fan Switches **RLS** Reverse Light Switches **VAR** Various

ERA S.p.A. Moncalieri (TO) Italy - tel: +39 011 6891511 - fax: +39 011 6472862 - www.eranet.it

Vehicle		Date	Engine	kW	OPS	BLS	TT-RF	RLS	VAR
2.2 TDCi		03/08-	Q4WA	129	330026	330597, 330726, 330733, 330734	330502	330603, 330604, 330611	
2.3		07/07-	SEWA	118	330029	330597, 330726, 330733, 330734	330585, 330640	330603, 330604, 330611	
2.5 ST		05/06-	HUWA	162		330597, 330726, 330733, 330734, 330740		330603, 330604, 330611	
SCORPIO			**04/85 - 08/98**						
2.0 i	I (GAE, GGE)	02/92-09/94	NRA, NRI	85	330005		330119, 330185, 330211, 330610		
	I Estate (GGE)	09/91-09/94	N9F	85	330005		330119, 330185, 330211, 330550, 330610		
	I Saloon (GGE)	02/92-09/94	N9F	85	330005		330119, 330185, 330211, 330550, 330610		
	II (GFR, GGR)	10/94-08/98	NSD	85	330005	330077, 330596	330125, 330613		
	II Estate (GNR, GGR)	10/94-08/98	NSD	85	330005	330077	330125, 330613		
	I (GAE, GGE)	05/89-09/94	N9D	88	330005		330119, 330185, 330211, 330610		
	I Estate (GGE)	09/91-09/94	N9D	88	330005		330119, 330185, 330211, 330550, 330610		
	I Saloon (GGE)	05/89-09/94	N9D	88	330005		330119, 330185, 330211, 330550, 330610		
	I Saloon (GGE)	05/89-02/92	--	92			330550		
2.0 i 16V	II (GFR, GGR)	10/94-08/98	N3A	100	330005	330077, 330596	330131, 330144		
	II Estate (GNR, GGR)	10/94-08/98	N3A	100	330005	330077	330131, 330144		
2.3 i 16V	II (GFR, GGR)	06/96-08/98	Y5A	108	330005	330077, 330596	330125, 330144		
	II Estate (GNR, GGR)	06/96-08/98	Y5A	108	330005	330077	330125, 330144		
2.4 i	I Estate (GGE)	09/91-09/94	ARD	92			330550		
	I Saloon (GGE)	10/88-10/94	ARD	92			330550		
	I (GAE, GGE)	09/86-09/88	ARC	96	330005		330119, 330185, 330610		
2.5 D	I (GAE, GGE)	12/85-02/92	STR	51	330010		330158, 330183, 330527		
	I Estate (GGE)	10/90-08/92	STR	51			330183		
	I Saloon (GGE)	12/89-12/94	STR	51			330183		
2.5 TD	I (GAE, GGE)	06/88-07/93	SFA, SFB	68	330010		330158, 330183, 330527		
	I Estate (GGE)	09/91-07/93	SFA, SFB	68	330010		330158, 330183, 330527		
	I Saloon (GGE)	06/88-07/93	SFA, SFB	68	330010		330158, 330183, 330527		
	I (GAE, GGE)	08/93-09/94	SCB	85	330024		330121, 330125, 330183		
	I Estate (GGE)	08/93-09/94	SCB	85	330024		330121, 330125, 330183		
	I Saloon (GGE)	08/93-09/94	SCB	85	330024		330121, 330125, 330183		

OPS Oil Pressure Switches **BLS** Brake Light Switches **TT-RF** Temperature Transmitter and Radiator Fan Switches **RLS** Reverse Light Switches **VAR** Various

Vehicle		Date	Engine	kW	OPS	BLS	TT-RF	RLS	VAR
2.5 TD	II (GFR, GGR)	10/94-08/98	SCC	85	330024	330077, 330596	330121, 330125, 330183, 330229		
	II Estate (GNR, GGR)	10/94-08/98	SCC	85	330024	330077	330121, 330125, 330183, 330229		
	II (GFR, GGR)	09/96-08/98	VM	92	330024	330077, 330596	330121, 330125, 330183, 330229		
	II Estate (GNR, GGR)	09/96-08/98	VM	92	330024	330077	330121, 330125, 330183, 330229		
2.9 24V	I Estate (GGE)	08/93-09/94	BOA	143	330005		330113, 330185, 330550, 330610		
2.9 i	I (GAE, GGE)	09/86-09/94	BRD, BRE, BRF	107	330005		330119, 330185, 330610		
	I Estate (GGE)	09/91-09/94	BRD, BRE, BRF	107	330005		330119, 330185, 330550, 330610		
	I Saloon (GGE)	09/86-12/94	BRD, BRE, BRF	107	330005		330119, 330185, 330550, 330610		
	I (GAE, GGE)	09/86-09/94	BRC	110	330005		330119, 330185, 330610		
	II (GFR, GGR)	02/95-08/98	BRG	110	330005	330077, 330596	330119, 330229		
	II Estate (GNR, GGR)	02/95-08/98	BRG	110	330005	330077	330119, 330229		
2.9 i 24V	I (GAE, GGE)	04/91-09/94	BOA	143	330005		330113, 330185, 330610		
	I Saloon (GGE)	04/91-09/94	BOA	143	330005		330113, 330185, 330550, 330610		
	II (GFR, GGR)	10/94-08/98	BOB	152	330005	330077, 330596	330131		
	II Estate (GNR, GGR)	10/94-08/98	BOB	152	330005	330077	330131		
2.9 i 4x4	I (GAE, GGE)	05/88-02/93	BRD, BRE, BRF	107	330005		330119, 330185, 330610		
	I Estate (GGE)	05/88-02/93	BRD, BRE, BRF	107	330005		330119, 330185, 330550, 330610		
	I Saloon (GGE)	12/89-10/94	BRD, BRE, BRF	107	330005		330119, 330185, 330550, 330610		
	I (GAE, GGE)	09/86-09/94	BRC	110	330005		330119, 330185, 330610		
2.9 i CAT	I (GAE, GGE)	10/87-09/94	BRE	107	330005		330119, 330185, 330610		
SIERRA		**08/82 - 03/93**							
1.3	Hatchback (GBC)	08/82-12/86	JCT	44	330005		330185, 330610	330232	
1.6 i	(GBG, GB4)	10/89-02/93	L6B	59	330005		330101	330232	
	Estate (BNG)	10/89-02/93	L6B	59	330005		330101	330232	
	Hatchback (GBC, GBG)	10/89-02/93	L6B	59	330005		330101	330232	
1.8	(GBG, GB4)	10/87-09/89	RED, REF	59			330550		
	Estate (BNG)	10/87-05/88	RED, REF	59			330550		
	Hatchback (GBC, GBG)	10/87-05/88	RED, REF	59			330550		
	(GBG, GB4)	05/88-02/93	R2C, R6A	64	330005		330113, 330182, 330550	330232	
	Estate (BNG)	05/88-02/93	R2C, R6A	64	330005		330113, 330182, 330550	330232	
	Hatchback (GBC, GBG)	05/88-02/93	R2C, R6A	64	330005		330113, 330182, 330550	330232	
	(GBG, GB4)	01/87-05/88	R2A, RED	66			330550		

OPS Oil Pressure Switches **BLS** Brake Light Switches **TT-RF** Temperature Transmitter and Radiator Fan Switches **RLS** Reverse Light Switches **VAR** Various

ERA S.p.A. Moncalieri (TO) Italy - tel: +39 011 6891511 - fax: +39 011 6472862 - www.eranet.it

Vehicle		Date	Engine	kW	OPS	BLS	TT-RF	RLS	VAR
1.8	Estate (BNC)	10/84-12/86	REB	66	330005		330185, 330610	330232	
	Estate (BNG)	01/87-05/88	R2A, RED	66			330550		
	Hatchback (GBC)	10/84-12/86	REB	66	330005		330185, 330610	330232	
	Hatchback (GBC, GBG)	01/87-05/88	R2A, RED	66			330550		
1.8 TD	(GBG, GB4)	08/88-02/93	RFA, RFB, RFL	55	330005		330113, 330182, 330185, 330610	330232	
	Estate (BNG)	08/88-02/93	RFA, RFB, RFL	55	330005		330113, 330182, 330185, 330610	330232	
	Hatchback (GBC, GBG)	08/88-02/93	RFA, RFB, RFL	55	330005		330113, 330182, 330185, 330610	330232	
2.0	(GBG, GB4)	01/87-02/93	N8C, NES	77	330005		330185, 330550, 330610	330232	
	Estate (BNG)	01/87-02/93	N8C, NES	77	330005		330185, 330550, 330610	330232	
	Hatchback (GBC)	08/82-12/86	NET	77	330005		330185, 330610	330232	
	Hatchback (GBC, GBG)	01/87-02/93	N8C, NES	77	330005		330185, 330550, 330610	330232	
2.0 4x4	(GBG, GB4)	01/90-02/93	N9C	88			330550		
	Estate (BNG)	02/90-02/93	N9C	88			330550		
	(GBG, GB4)	01/90-02/93	N9C	92			330550		
	Estate (BNG)	05/89-02/93	N9C	92			330550		
2.0 16V Cosworth 4x4	(GBG, GB4)	01/90-02/93	N5C	162			330183		
	Hatchback (GBC, GBG)	01/90-02/93	N5D	162			330183, 330550		
2.0 16V Cosworth 4x4 CAT	Hatchback (GBC, GBG)	01/90-02/93	N5C	162			330183, 330550		
2.0 i	(GBG, GB4)	01/87-12/89	NE5, NEJ	74			330550		
	Estate (BNG)	01/87-02/93	NE5, NEJ	74			330550		
	Hatchback (GBC, GBG)	01/87-02/93	NE5, NEJ	74			330550		
	Hatchback (GBC, GBG)	06/89-02/93	N8A	80			330550		
	(GBG, GB4)	01/87-02/93	N4A, N4I	85			330550		
	Estate (BNG)	01/87-02/93	N4A, N4I	85			330550		
	Hatchback (GBC)	03/85-12/86	NR2, NRB	85	330005		330185, 330610	330232	
	Hatchback (GBC, GBG)	01/87-02/93	N4A, N4I	85			330550		
	(GBG, GB4)	01/90-02/93	N9C	88			330550		
	Estate (BNG)	05/89-02/93	N9C	88			330550		
	Hatchback (GBC, GBG)	06/89-02/93	N9C	88			330550		
	(GBG, GB4)	01/90-02/93	N9C	92			330550		
	Estate (BNG)	05/89-02/93	N9C	92			330550		
	Hatchback (GBC, GBG)	06/89-02/93	N9B	92	330005		330119, 330185, 330211, 330550, 330610		
2.0 i CAT	(GBG, GB4)	01/87-02/93	N4B	74			330550		
	Estate (BNG)	01/87-02/93	N4B	74			330550		
	Hatchback (GBC, GBG)	01/87-02/93	N4B	74			330550		
2.0 RS Cosworth	(GBG, GB4)	01/87-12/90	N5B	150			330183		
	Hatchback (GBC, GBG)	11/87-01/90	N5B	150			330183, 330550		

OPS Oil Pressure Switches **BLS** Brake Light Switches **TT-RF** Temperature Transmitter and Radiator Fan Switches **RLS** Reverse Light Switches **VAR** Various

Vehicle		Date	Engine	kW	OPS	BLS	TT-RF	RLS	VAR
2.3 D	(GBG, GB4)	01/87-09/89	YTR, YTT	49			330183		
	Estate (BNC)	08/82-12/86	YTT	49			330183		
	Estate (BNG)	01/87-02/93	YTR	49			330183		
	Hatchback (GBC)	08/82-12/86	YTT	49			330183		
	Hatchback (GBC, GBG)	01/87-09/89	YTR	49			330183		
2.8 4x4	Estate (BNG)	01/87-08/88	PRG	110			330550		
2.8 i XR 4x4	Hatchback (GBC, GBG)	01/87-08/88	PRG	110			330550		
2.9	Estate (BNG)	08/88-02/93	B4B, B4C	107			330550		
2.9 4x4	(GBG, GB4)	08/88-02/93	B4B, B4C	107			330550		
	Estate (BNG)	08/88-02/93	B4B, B4C	107			330550		
	(GBG, GB4)	08/88-02/93	B4B, B4C	110			330550		
	Estate (BNG)	08/88-02/93	B4B, B4C	110			330550		
2.9 i	(GBG, GB4)	08/88-02/93	B4B, B4C	107			330550		
	Hatchback (GBC, GBG)	08/88-02/93	B4B, B4C	107			330550		
	(GBG, GB4)	08/88-02/93	B4B, B4C	110			330550		
	Estate (BNG)	08/88-02/93	B4B, B4C	110			330550		
2.9 i XR 4x4	Hatchback (GBC, GBG)	08/88-02/93	B4B, B4C	107			330550		
	Hatchback (GBC, GBG)	08/88-02/93	B4A	110			330550		
STREET KA			**05/03 - 07/05**						
1.6		05/03-07/05	CDRA, CDRB	70	330028	330066	330586	330263	
TAUNUS			**07/79 - 07/82**						
1.6	´80 Turnier (GBNS)	07/79-07/82	LCJ	54	330005	330033	330088	330232	
TOURNEO CONNECT			**06/02 -**						
1.8 16V		06/02-	EYPA, EYPC	85	330028	330549, 330597, 330726	330125	330611	
1.8 Di		06/02-	BHPA	55	330029	330549, 330597, 330726, 330734		330611	
1.8 TDCi		08/06-	RWPA	81	330029	330549, 330597, 330726, 330734		330611	
1.8 Turbo Di		06/02-	HCPA	66	330029	330549, 330597, 330726, 330734		330611	
TRANSIT			**09/85 -**						
1.6	Box (T_ _)	09/85-09/92	LAT	46	330005		330088, 330101	330232, 330259	
	Bus (T_ _)	12/85-01/89	LAT	46	330005		330088, 330101	330232, 330259	
2.0	Box (T_ _)	09/85-09/92	NAT, NAV	57	330005		330088, 330101, 330550	330232, 330259	
	Bus (T_ _)	11/85-09/92	NAT, NAV	57	330005		330088, 330101, 330550	330232, 330259	
	Bus (T_ _)	12/85-09/92	N6T	57	330005		330088, 330101, 330550	330232, 330259	
	Flatbed / Chassis (T_ _)	01/86-09/92	NAT, NAV	57	330005		330088, 330101, 330550	330232, 330259	
	Flatbed / Chassis (T_ _)	11/85-09/92	N6T	57	330005		330088, 330101, 330550	330232, 330259	

OPS Oil Pressure Switches **BLS** Brake Light Switches **TT-RF** Temperature Transmitter and Radiator Fan Switches **RLS** Reverse Light Switches **VAR** Various

ERA S.p.A. Moncalieri (TO) Italy - tel: +39 011 6891511 - fax: +39 011 6472862 - www.eranet.it

Vehicle		Date	Engine	kW	OPS	BLS	TT-RF	RLS	VAR
2.0	Box (E_ _)	09/91-06/94	NBA	66	330005		330088, 330101	330259	
	Bus (E_ _)	09/91-09/94	NBA	66	330005		330088, 330101	330259	
	Flatbed / Chassis (E_ _)	09/91-08/94	NCA	72	330005		330088, 330101	330259	
	Box (E_ _)	06/94-03/00	NSF, NSG	84	330005		330125, 330605, 330613	330259	
	Box (FA_ _)	09/00-03/06	NSF	84			330613		
	Bus (E_ _)	09/95-03/00	NSF, NSG	84	330005		330125, 330605, 330613	330259	
	Bus (FD_ _, FB_ _, FS_ _, FZ_ _, FC_ _)	09/00-03/06	NSF	84			330613		
	Flatbed / Chassis (E_ _)	08/94-03/00	NSF, NSG	84	330005		330125, 330605, 330613	330259	
2.0 CNG	Bus (E_ _)	06/94-03/00	NSH	84	330005		330125, 330605	330259	
2.0 DI	Box (FA_ _)	08/00-05/06	D3FA	55	330028		330116	330594, 330625	
	Bus (FD_ _, FB_ _, FS_ _, FZ_ _, FC_ _)	08/00-05/06	D3FA	55	330028		330116	330594, 330625	
	Flatbed / Chassis (FM_ _, FN_ _)	08/00-05/06	D3FA	55	330028		330116	330594, 330625	
	Box (FA_ _)	08/00-05/06	F3FA	63	330028		330116	330594, 330625	
	Bus (FD_ _, FB_ _, FS_ _, FZ_ _, FC_ _)	08/00-05/06	F3FA	63	330028		330116	330594, 330625	
	Flatbed / Chassis (FM_ _, FN_ _)	08/00-05/06	F3FA	63	330028		330116	330594, 330625	
	Box (FA_ _)	08/00-05/06	ABFA	74	330028		330116	330594, 330625	
	Bus (FD_ _, FB_ _, FS_ _, FZ_ _, FC_ _)	08/00-05/06	ABFA	74	330028		330116	330594, 330625	
	Flatbed / Chassis (FM_ _, FN_ _)	08/00-05/06	ABFA	74	330028		330116	330594, 330625	
2.0 i	Box (E_ _)	09/91-06/94	NCA	72	330005		330088, 330101	330259	
	Bus (E_ _)	09/91-07/94	NCA	72	330005		330088, 330101	330259	
2.0 TDCi	Box (FA_ _)	08/02-05/06	FIFA	92	330028		330116	330594, 330625	
	Bus (FD_ _, FB_ _, FS_ _, FZ_ _, FC_ _)	08/02-05/06	FIFA	92	330028		330116	330594, 330625	
	Flatbed / Chassis (FM_ _, FN_ _)	08/02-05/06	FIFA	92	330028		330116	330594, 330625	
2.2 TDCi	Box	04/06-	P8FA	63	330028	330597, 330734			
	Bus	04/06-	P8FA	63	330028	330597, 330734		330594	
	Flatbed / Chassis	04/06-	P8FA	63	330028	330597, 330734		330594	
	Box	04/06-	QVFA	81	330028	330597, 330734		330594	
	Bus	04/06-	QVFA	81	330028	330597, 330734		330594	
	Flatbed / Chassis	04/06-	QVFA	81	330028	330597, 330734		330594	
	Box	10/08-	SRFA	85		330597, 330734			
	Bus	10/08-	SRFA	85		330734			
	Flatbed / Chassis	10/08-	SRFA	85		330734			
	Box	04/06-	QWFA	96	330028	330597, 330734		330594	
	Bus	04/06-	QWFA	96	330028	330597, 330734		330594	
	Flatbed / Chassis	04/06-	QWFA	96	330028	330597, 330734		330594	
	Box	10/07-	PGFA	103		330597, 330734			
	Bus	10/07-	PGFA	103		330734			
	Flatbed / Chassis	10/07-	PGFA	103		330734			

OPS Oil Pressure Switches **BLS** Brake Light Switches **TT-RF** Temperature Transmitter and Radiator Fan Switches **RLS** Reverse Light Switches **VAR** Various

Vehicle		Date	Engine	kW	OPS	BLS	TT-RF	RLS	VAR
2.3	Box (FA_ _)	03/01-03/06	E5FC	105				330625	
	Flatbed / Chassis (FM_ _, FN_ _)	03/01-03/06	E5FC	105				330625	
	Box (FA_ _)	03/01-03/06	E5FA	107				330625	
2.3 16V	Box	04/06-	GZFA	107	330029	330597, 330734	330640	330594	
	Flatbed / Chassis	04/06-	GZFA	107	330029	330597, 330734	330640	330594	
	Flatbed / Chassis (FM_ _, FN_ _)	04/01-05/06	E5FA	107	330005		330116, 330144, 330605	330625	
2.3 16V [RWD]	Box (FA_ _)	04/01-05/06	E5FA	107	330005		330116, 330144, 330605	330625	
	Bus (FD_ _, FB_ _, FS_ _, FZ_ _, FC_ _)	08/00-05/06	E5FA	107	330005		330116, 330144, 330605	330625	
2.4 DI	Flatbed / Chassis (FM_ _, FN_ _)	01/00-05/06	F4FA	55	330028, 330030		330116	330594, 330625	
	Box (FA_ _)	01/00-05/06	D2FA, D2FE	66	330028, 330030		330116	330594, 330625	
	Bus (FD_ _, FB_ _, FS_ _, FZ_ _, FC_ _)	01/00-05/06	D2FA, D2FB	66	330028, 330030		330116	330594, 330625	
	Flatbed / Chassis (FM_ _, FN_ _)	01/00-05/06	D2FA, D2FE	66	330028, 330030		330116	330594, 330625	
	Flatbed / Chassis (FM_ _, FN_ _)	01/00-05/06	D4FA	88	330028, 330030		330116	330594, 330625	
2.4 DI [RWD]	Box (FA_ _)	01/00-05/06	F4FA	55	330028, 330030		330116	330594, 330625	
	Bus (FD_ _, FB_ _, FS_ _, FZ_ _, FC_ _)	01/00-05/06	F4FA	55	330028, 330030		330116	330594, 330625	
	Box (FA_ _)	01/00-05/06	D4FA	88	330028, 330030		330116	330594, 330625	
	Bus (FD_ _, FB_ _, FS_ _, FZ_ _, FC_ _)	01/00-05/06	D4FA	88	330028, 330030		330116	330594, 330625	
2.4 TD	Box (FA_ _)	08/00-08/03	F4FA	55				330625	
	Bus (FD_ _, FB_ _, FS_ _, FZ_ _, FC_ _)	08/00-08/03	F4FA	55				330625	
2.4 TD All-wheel Drive	Box (FA_ _)	08/00-08/03	F4FA	55	330028, 330030		330116	330625	
2.4 TDCi	Box	04/06-	PHFA	74	330028	330597, 330734		330594	
	Bus	04/06-	PHFA	74	330028	330597, 330734		330594	
	Flatbed / Chassis	04/06-	PHFA	74	330028	330597, 330734		330594	
	Box	04/06-	JXFA	85	330028	330597, 330734		330594	
	Bus	04/06-	JXFA	85	330028	330597, 330734		330594	
	Flatbed / Chassis	04/06-	JXFA	85	330028	330597, 330734		330594	
	Box (FA_ _)	03/04-05/06	H9FA	101	330028		330116	330594, 330625	
	Bus (FD_ _, FB_ _, FS_ _, FZ_ _, FC_ _)	03/04-05/06	H9FA	101	330028		330116	330625	
	Flatbed / Chassis (FM_ _, FN_ _)	03/04-05/06	H9FA	101	330028		330116	330594, 330625	
	Box	04/06-	H9FD	103	330028	330597, 330734		330594	
	Bus	04/06-	H9FD	103	330028	330597, 330734		330594	
	Flatbed / Chassis	04/06-	H9FD	103	330028	330597, 330734		330594	
2.4 TDCi 4x4	Box	11/06-	H9FB	103		330597, 330734			
	Bus	11/06-	H9FB	103	330028	330597, 330734		330594	
	Flatbed / Chassis	11/06-	H9FB	103	330028	330597, 330734		330594	
2.4 TDdi	Bus (FD_ _, FB_ _, FS_ _, FZ_ _, FC_ _)	10/01-03/06	D2FE	66	330028, 330030		330116	330625	
	Box (FA_ _)	08/00-08/03	D4FA	88				330625	
	Bus (FD_ _, FB_ _, FS_ _, FZ_ _, FC_ _)	08/00-08/03	D4FA	88	330028, 330030		330116	330625	

OPS Oil Pressure Switches **BLS** Brake Light Switches **TT-RF** Temperature Transmitter and Radiator Fan Switches **RLS** Reverse Light Switches **VAR** Various

ERA S.p.A. Moncalieri (TO) Italy - tel: +39 011 6891511 - fax: +39 011 6472862 - www.eranet.it

Vehicle		Date	Engine	kW	OPS	BLS	TT-RF	RLS	VAR
2.4 TDdi	Flatbed / Chassis (FM_ _, FN_ _)	08/00-08/03	D4FA	88	330028, 330030		330116	330625	
2.4 TDE	Box (FA_ _)	03/04-05/06	FXFA	85	330028		330116	330594, 330625	
	Bus (FD_ _, FB_ _, FS_ _, FZ_ _, FC_ _)	03/04-05/06	FXFA	85	330028		330116	330594, 330625	
	Flatbed / Chassis (FM_ _, FN_ _)	03/04-05/06	FXFA	85	330028		330116	330594, 330625	
	Box (FA_ _)	07/01-05/06	DOFA	92	330028, 330030		330116	330594, 330625	
	Bus (FD_ _, FB_ _, FS_ _, FZ_ _, FC_ _)	07/01-05/06	DOFA	92	330028, 330030		330116	330594, 330625	
	Flatbed / Chassis (FM_ _, FN_ _)	07/01-05/06	DOFA	92	330028, 330030		330116	330594, 330625	
2.5 D	Box (T_ _)	01/86-09/91	4AB	50	330014		330131	330232, 330259	
	Bus (T_ _)	12/85-01/89	4AB	50	330014		330131	330232, 330259	
	Flatbed / Chassis (T_ _)	01/86-01/89	4AB	50	330014		330131	330232, 330259	
	Box (T_ _)	10/88-09/91	4BA, 4CA	52	330014		330131, 330587, 330612	330232, 330259	
	Bus (T_ _)	09/88-09/92	4BA, 4CA	52	330014		330131, 330587, 330612	330232, 330259	
2.5 DI	Box (E_ _)	05/91-06/94	4BC, 4CC, 4FA	51	330014		330587, 330612	330259	
	Box (E_ _)	06/94-03/00	4FA, 4FB, 4FC, 4FD	51	330014		330144, 330600, 330605	330259	
	Bus (E_ _)	08/91-07/94	4BC, 4CC, 4FA	51	330014		330587, 330612	330259	
	Bus (E_ _)	08/94-03/00	4FA, 4FB, 4FC, 4FD	51	330014		330144, 330600, 330605	330259	
	Flatbed / Chassis (E_ _)	08/94-03/00	4FA, 4FB, 4FC, 4FD	51	330014		330144, 330600, 330605	330259	
	Flatbed / Chassis (E_ _)	09/91-08/94	4BC, 4CC, 4FA	51	330014		330587, 330612	330259	
	Flatbed / Chassis (T_ _)	09/88-09/92	4BA, 4CA	52	330014		330131, 330587, 330612	330232, 330259	
	Box (E_ _)	06/94-03/00	4HB, 4HC	56	330014		330144, 330600, 330605	330259	
	Bus (E_ _)	07/94-03/00	4HB, 4HC	56	330014		330144, 330600, 330605	330259	
	Flatbed / Chassis (E_ _)	08/94-03/00	4HB, 4HC	56	330014		330144, 330600, 330605	330259	
	Box (E_ _)	05/91-06/94	4DA	59	330014		330587, 330612	330259	
	Bus (E_ _)	09/91-07/94	4DA	59	330014		330587, 330612	330259	
	Flatbed / Chassis (E_ _)	09/91-08/94	4DA	59	330014		330587, 330612	330259	
	Box (E_ _)	10/92-06/94	4GA	63	330014		330587, 330612	330259	
	Box (E_ _)	05/99-03/00	4ED	85	330014		330144, 330605	330259	
	Bus (E_ _)	08/97-03/00	4ED	85	330014		330144, 330605	330259	
	Flatbed / Chassis (E_ _)	05/99-03/00	4ED	85	330014		330144, 330605	330259	
2.5 TD	Box (E_ _)	10/98-03/00	4HA, 4HD	55	330014		330144, 330605	330259	
	Bus (E_ _)	08/94-06/00	4HA, 4HD	55	330014		330144, 330605	330259	
	Flatbed / Chassis (E_ _)	10/98-	4HA, 4HD	55	330014		330144, 330605	330259	
	Box (E_ _)	06/94-03/00	4GA, 4GB, 4GC, 4GD, 4GE, 4GF	63	330014		330144, 330605	330259	
	Bus (E_ _)	10/92-07/94	4GA, 4GB, 4GC	63	330014		330587, 330612	330259	
	Bus (E_ _)	01/95-03/00	4GA, 4GB, 4GC, 4GD, 4GE, 4GF	63	330014		330144, 330605	330259	

OPS Oil Pressure Switches **BLS** Brake Light Switches **TT-RF** Temperature Transmitter and Radiator Fan Switches **RLS** Reverse Light Switches **VAR** Various

Vehicle		Date	Engine	kW	OPS	BLS	TT-RF	RLS	VAR
2.5 TD	Flatbed / Chassis (E_ _)	08/94-03/00	4GA, 4GB, 4GC, 4GD, 4GE, 4GF	63	330014		330144, 330605	330259	
	Flatbed / Chassis (E_ _)	11/92-08/94	4GA	63	330014		330587, 330612	330259	
	Box (E_ _)	05/91-06/94	4EA	74	330014		330131, 330587, 330612	330259	
	Bus (E_ _)	09/91-07/94	4EA	74	330014		330131, 330587, 330612	330259	
	Bus (E_ _)	07/94-03/00	4EB, 4EC	74	330014		330144, 330605	330259	
	Flatbed / Chassis (E_ _)	08/94-03/00	4EB, 4EC	74	330014		330144, 330605	330259	
	Flatbed / Chassis (E_ _)	09/91-08/94	4EA	74	330014		330131, 330587, 330612	330259	
2.5 TDI	Box (E_ _)	06/94-03/00	4EB, 4EC	74	330014		330144, 330605	330259	
2.9 i	Bus (E_ _)	01/91-	BRT	107	330005		330101, 330119	330259	
3.2 TDCi	Box	09/07-	SAFA	147	330028	330597, 330734		330594	
	Bus	02/08-	SAFA	147	330028	330597, 330734		330594	
	Flatbed / Chassis	09/07-	SAFA	147	330028	330597, 330734		330594	
TRANSIT CONNECT			**06/02 -**						
1.8 16V	(P65_, P70_, P80_)	06/02-	EYPA, EYPC	85	330028	330549, 330597, 330726	330125, 330613	330525, 330593, 330611	
1.8 Di	(P65_, P70_, P80_)	06/02-	P7PA	55	330029	330549, 330597, 330726, 330734		330525, 330593, 330611	
1.8 TDCi	(P65_, P70_, P80_)	06/02-	HCPA	66	330029	330549, 330597, 330726, 330734		330525, 330593, 330611	
	(P65_, P70_, P80_)	08/06-	RWPA	81	330029	330549, 330597, 330726, 330734		330593, 330611	
TRANSIT TOURNEO			**11/94 -**						
2.0		11/94-12/00	NSH	84			330613		
2.2 TDCi		07/06-	QVFA	81	330028	330597, 330734		330594	
		10/08-	SRFA	85		330734			
		07/06-	QWFA	96	330028	330597, 330734		330594	
		10/07-	PGFA	103		330734			
2.5 DI		11/94-12/00	4FA, 4FB, 4FC, 4FD	51	330014		330144	330259	
		11/94-12/00	4HA, 4HB, 4HC	56	330014		330144	330259	
2.5 TD		11/94-12/00	4GA, 4GB, 4GC	63	330014		330144	330259	
		04/98-12/00	4EB, 4EC	74	330014		330144	330259	
FORD USA									
EXPLORER			**01/93 -**						
4.0 V6 All-wheel Drive	(U2)	03/95-	--	115	330005		330144		
	(U2)	01/93-	--	121	330005		330144		
	(U2)	10/98-	--	150	330005		330640		
	(U2)	05/98-	--	152	330005		330640		
WINDSTAR			**01/95 -**						
3.0 V6	(A3)	03/95-02/99	--	109	330005, 330623		330144		

OPS Oil Pressure Switches **BLS** Brake Light Switches **TT-RF** Temperature Transmitter and Radiator Fan Switches **RLS** Reverse Light Switches **VAR** Various

ERA S.p.A. Moncalieri (TO) Italy - tel: +39 011 6891511 - fax: +39 011 6472862 - www.eranet.it

Vehicle		Date	Engine	kW	OPS	BLS	TT-RF	RLS	VAR
FSO									
126P			**07/72 - 09/00**						
0.6		07/72-07/77	--	17	330000	330032	330082, 330294		
		07/77-12/91	126 A1.048	22	330000	330032	330082, 330294		
POLONEZ			**10/77 - 08/88**						
1.5	I	10/77-08/88	AA	55		330032	330082, 330165		
HOLDEN									
APOLLO			**08/89 - 12/97**						
2.0	Estate (JK)	08/89-08/91	3S-FC	82		330081		330743	
	Saloon (JK)	08/89-07/91	3S-FC	82		330081		330743	
2.0 i	Estate (JK)	08/89-08/91	3S-FE	88		330081		330743	
	Estate (JL)	08/91-02/93	3S-FE	88		330081		330743	
	Saloon (JK)	08/89-08/91	3S-FE	88		330081		330743	
	Saloon (JL)	08/91-02/93	3S-FE	88		330081		330743	
2.2 i	Estate (JM)	03/93-05/95	5S-FE	93		330703		330743	
	Estate (JP)	01/95-05/97	5S-FE	93		330703		330743	
	Saloon (JM)	03/93-05/95	5S-FE	93		330703		330743	
	Saloon (JP)	01/95-05/97	5S-FE	93		330703		330743	
3.0 i	Estate (JM)	03/93-05/95	3VZ-FE	136		330703			
	Estate (JP)	01/95-05/97	3VZ-FE	136		330703			
	Saloon (JM)	03/93-05/95	3VZ-FE	136	330022	330059, 330703	330100, 330130		
	Saloon (JP)	01/95-05/97	3VZ-FE	136		330703			
ASTRA			**08/95 - 09/98**						
2.0 CDX	Saloon (TR)	08/95-01/98	X 20 XEV	100	330364		330116, 330220, 330223, 330298	330244	
2.0 GSi	Hatchback (TR)	08/95-09/98	X 20 XEV	100	330364		330116, 330220, 330223, 330298	330244	
BARINA			**02/89 - 02/01**						
1.3 GL	Hatchback (MF)	02/89-09/91	G13BA	50		330081			
	Hatchback (MH)	10/91-05/94	G13BA	50		330081			
1.6	Hatchback (SB)	05/97-08/00	X 16 XE	78	330364		330085, 330116, 330225, 330277		
HONDA									
ACCORD			**11/85 -**						
1.6 i	VII (CG, CK)	10/98-12/02	D16B6	85		330061	330095, 330116, 330193		
1.6 L	III (CA4, CA5)	11/85-12/89	A16A1	65	330007		330095		
1.8	IV (CB)	01/90-12/91	--	77	330007		330095		
1.8 i	VII (CG, CK)	10/98-12/02	F18B2	100			330095		
	VII Hatchback (CH)	12/99-12/02	F18B2	100			330095		

OPS Oil Pressure Switches **BLS** Brake Light Switches **TT-RF** Temperature Transmitter and Radiator Fan Switches **RLS** Reverse Light Switches **VAR** Various

Vehicle		Date	Engine	kW	OPS	BLS	TT-RF	RLS	VAR
1.9 i	VI (CE, CF)	02/96-10/98	F18A3	85	330007	330701	330095, 330193		
2.0	V Coupe (CD7, CD9)	09/93-12/97	F20B3	100	330007	330701	330095, 330193		
	VII Hatchback (CH)	12/99-12/02	F20B6	108		330061	330095		
	VIII (CL_, CM_)	02/03-	K20A6	114			330648		
	VIII Tourer (CM_)	04/03-	K20A6	114			330648		
2.0 All-wheel Drive	VIII (CL_, CM_)	02/03-	K20A6	114			330648		
2.0 12V	III (CA4, CA5)	01/87-12/89	A20A3	85	330007		330095		
2.0 16V	IV (CB)	01/90-03/93	F20A6	66	330007	330701	330095		
	IV (CB)	01/90-03/93	F20A2	81	330007	330701	330095		
2.0 EX	III (CA4, CA5)	11/85-12/89	A20A1	75	330007		330095		
	III Aerodeck (CA5)	10/87-12/89	A20A1	75	330007		330095		
	III (CA4, CA5)	11/85-12/89	A20A1	76	330007		330095		
	III Aerodeck (CA5)	10/87-12/89	A20A1	76	330007		330095		
	III (CA4, CA5)	11/85-05/89	A20A2	78	330007		330095		
	III Aerodeck (CA5)	11/85-05/89	A20A2	78	330007		330095		
2.0 EXi	III (CA4, CA5)	01/86-12/89	A20A3	85	330007		330095		
	III Aerodeck (CA5)	10/87-12/89	A20A3	85	330007		330095		
	III Aerodeck (CA5)	11/85-12/87	A20A4	90	330007		330095		
2.0 i	V (CC7, CD)	03/93-01/96	F20Z2	85	330007		330095		
	VII (CG, CK)	10/98-01/01	F20B6	108			330095		
2.0 i 16V	III (CA4, CA5)	10/87-12/89	B20A8	98	330007		330095		
	IV (CB)	01/90-03/93	F20A4, F20A8	98	330007	330701	330095		
	IV Aerodeck (CB)	03/93-12/93	F20Z3	98	330007	330701	330095		
	IV Coupe (CC1)	01/92-09/93	F20A7	98	330007	330701	330095		
	VII Coupe (CG)	02/98-06/03	F20B5, F20B7	108	330007		330095, 330193		
2.0 i LS	VI (CE, CF)	02/96-10/98	F20Z1	96	330007	330061, 330701	330095, 330193		
2.0 i LS 16V	V Aerodeck (CE)	09/93-02/98	F20B3	100	330007	330701	330095, 330193		
2.0 i S	V (CC7, CD)	03/93-01/96	F20Z1	96	330007	330701	330095		
2.0 TDi	VI (CE, CF)	04/96-10/98	20T2N	77	330019	330701	330116		
2.0 Turbo DI	VII (CG, CK)	02/99-12/02	20T2N	77	330019, 330356		330116, 330187, 330196		
2.2	IV Aerodeck (CB)	05/92-12/94	F22A6	103		330701			
	VI (CE, CF)	04/96-12/97	F22Z2	103		330701			
	VI (CE, CF)	06/94-06/96	F22B1	107		330701			
2.2 i 16V	IV Aerodeck (CB)	01/91-12/93	F22A8	108	330007	330701	330095		
	IV (CB)	01/90-03/93	F22A3	110	330007	330701	330095		
	IV Aerodeck (CB)	01/91-12/93	F22A7	110	330007	330701	330095		
2.2 i 16V Automatik	IV (CB)	01/90-03/93	F22A3	108	330007	330701	330095		
2.2 i ES	V Aerodeck (CE)	09/93-02/98	F22B5	110	330007	330701	330095, 330193		
	V Coupe (CD7, CD9)	09/93-02/98	F22B5	110	330007	330701	330095, 330193		
2.2 i VTEC	VI (CE, CF)	02/96-10/98	F22Z2	110	330007	330061, 330701	330095, 330193		

OPS Oil Pressure Switches **BLS** Brake Light Switches **TT-RF** Temperature Transmitter and Radiator Fan Switches **RLS** Reverse Light Switches **VAR** Various

ERA S.p.A. Moncalieri (TO) Italy - tel: +39 011 6891511 - fax: +39 011 6472862 - www.eranet.it

Vehicle		Date	Engine	kW	OPS	BLS	TT-RF	RLS	VAR
2.2 i-CTDi	VIII (CL_, CM_)	01/04-	N22A1	103			330137		
	VIII Tourer (CM_)	01/04-	N22A1	103			330137		
2.2 Type-R	VII (CG, CK)	02/99-12/02	H22A7	156	330006	330061	330095		
2.3	VII (CG, CK)	01/01-06/03	F23Z5	113			330095		
	VII Hatchback (CH)	11/00-12/02	F23Z5	113			330095		
2.3 i SR	V (CC7, CD)	03/93-01/96	H23A3	116	330006	330701	330095		
2.3 VTi	VII Coupe (CG)	02/98-10/02	F23A3	113	330007		330095, 330193		
2.4	VIII (CL_, CM_)	02/03-	K24A	140			330648		
	VIII Tourer (CM_)	04/03-	K24A	140			330648		
3.0 V6 24V	VII Coupe (CG)	02/98-06/03	J30A1	147	330007		330095, 330193		
CITY		**05/03 -**							
1.2	Saloon	05/03-09/05	L12A2	58			330648		
1.3	Saloon	10/05-	L13A3	60			330648		
1.5 FF	Saloon	09/04-09/05	L15A1	70			330648		
	Saloon	10/05-	L15A1	79			330648		
CIVIC		**09/87 -**							
1.3	IV Hatchback (EC, ED, EE)	10/87-12/89	D13B1	55	330007		330095		
	IV Saloon (ED)	10/87-12/89	D13B1	55	330007		330095		
	VIII Saloon (FD)	02/06-	--	85			330648		
1.3 16 V	IV Hatchback (EC, ED, EE)	09/89-09/91	D13B2	55	330007		330095		
1.3 16V	IV Hatchback (EG)	10/91-11/95	D13B2	55	330007		330095, 330193		
1.3 Hybrid	VIII Saloon (FD)	01/06-	LDA2	70			330648		
1.3 IMA	VII Saloon (ES)	01/04-09/05	LDA1	61			330648		
1.4	VIII Hatchback (FN, FK)	01/06-	L13A7	61			330648		
	VII Saloon (ES)	02/01-09/05	D14Z5	66	330007		330193, 330648		
	VIII Hatchback (FN, FK)	10/08-	L13Z1	73			330648		
1.4 16V	VI Aerodeck (MB, MC)	04/98-02/01	D14A7	55	330007	330061	330095, 330193		
	VI Fastback (MA)	01/97-02/01	D14A7	55	330007	330061	330095, 330193		
	VI Aerodeck (MB, MC)	04/98-02/01	D14A8	66	330007	330061	330095, 330193		
	VI Fastback (MA)	01/97-02/01	D14A8	66	330007	330061	330095, 330193		
1.4 i	VI Fastback (MA)	09/95-01/97	D14A5	55	330007	330061	330095, 330193		
	VI Hatchback (EJ, EK)	11/95-02/01	D14A3	55	330007	330059	330095, 330193		
	VII Hatchback (EU, EP, EV)	02/01-09/05	D14Z6	55			330648		
	VI Fastback (MA)	09/94-01/97	D14A2	66	330007	330061	330095, 330193		
	VI Saloon (EJ, EK)	11/95-02/01	D14A4	66	330007	330059	330095, 330193		
1.4 i S	VI Hatchback (EJ, EK)	11/95-02/01	D14A4	66	330007	330059	330095, 330193		
1.4 iS	VII Hatchback (EU, EP, EV)	02/01-09/05	D14Z6	66			330193, 330648		
1.4 L	IV Hatchback (EC, ED, EE)	10/87-12/89	D14A1	66	330007		330095		
	IV Saloon (ED)	10/87-12/89	D14A1	66	330007		330095, 330174		
1.5	IV Saloon (ED)	01/88-12/89	D15B1	60	330007		330095		

OPS Oil Pressure Switches **BLS** Brake Light Switches **TT-RF** Temperature Transmitter and Radiator Fan Switches **RLS** Reverse Light Switches **VAR** Various

Vehicle		Date	Engine	kW	OPS	BLS	TT-RF	RLS	VAR
1.5 16V	VI Aerodeck (MB, MC)	04/98-02/01	D15Z8	84	330007	330061	330095, 330193		
	VI Fastback (MA)	01/97-02/01	D15Z8	84	330007	330061	330095, 330193		
1.5 i	VI Hatchback (EJ, EK)	11/95-02/01	D15Z6	84	330007	330059	330095, 330193		
	VI Saloon (EJ, EK)	11/95-02/01	D15Z6	84	330007	330059	330095, 330193		
1.5 i 16V	IV Hatchback (EC, ED, EE)	10/88-09/91	D15B2	66	330007		330095		
	IV Hatchback (EG)	10/91-11/95	D15B2	66	330007		330095, 330193		
	IV Saloon (ED)	10/87-09/91	D15B2	66	330007		330095, 330174		
	IV Hatchback (EC, ED, EE)	10/88-09/91	D15B2	69	330007		330095		
	IV Hatchback (EG)	10/91-11/95	D15B2, D15Z1	69	330007		330095, 330193		
	IV Saloon (ED)	10/87-09/91	D15B2	69	330007		330095, 330174		
	V Saloon (EG, EH)	10/91-11/95	D15B2, D15Z1	69	330007		330095, 330193		
1.5 i LSi	V Coupe (EJ)	01/94-11/95	D15B7	74	330007		330095, 330193		
1.5 i Vtec-E	VI Fastback (MA)	09/94-01/97	D15Z3	66	330007	330061	330095, 330193		
1.6	VII Saloon (ES)	02/01-09/05	D16V1	81			330193, 330648		
	VIII Hatchback (FN, FK)	09/05-	R16A1	84			330648		
	VIII Saloon (FD)	09/05-	R16A1	84			330648		
	VI Fastback (MB)	11/98-10/00	D16W4	92		330061	330095, 330193		
1.6 4x4	V Saloon (EG, EH)	01/92-10/95	D16Z7	92	330007		330095, 330193		
1.6 16V	VI Aerodeck (MB, MC)	04/98-02/01	D16B2	85	330007	330061	330095, 330193		
	VI Fastback (MA)	01/97-02/01	D16B2	85	330007	330061	330095, 330193		
1.6 16V Vtec	IV Hatchback (EG)	10/91-11/95	D16Z6	92	330007		330095, 330193		
	V Saloon (EG, EH)	10/91-11/95	D16Z6, D16Z7	92	330007		330095, 330193		
1.6 EX	V Saloon (EG, EH)	08/93-10/95	D16A7	88	330007		330095, 330193		
1.6 i	VII Coupe (EM2)	02/01-12/05	D16V1	81			330648		
	VII Hatchback (EU, EP, EV)	02/01-09/05	D16V1	81			330193, 330648		
	VI Fastback (MA)	09/94-01/97	D16Y3	83	330007	330061	330095, 330193		
	VI Hatchback (EJ, EK)	11/95-02/01	D16Y5	84	330007	330059	330095, 330193		
1.6 i 16V	IV Saloon (ED)	11/87-09/91	D16A6	80	330007		330095, 330174		
	IV Hatchback (EC, ED, EE)	10/87-09/91	D16Z2	81	330007		330095		
	IV Saloon (ED)	10/87-09/91	D16Z2	81	330007		330095		
	IV Hatchback (EC, ED, EE)	09/87-09/91	D16A7, D16A9	96	330007		330095, 330174		
	IV Saloon (ED)	09/87-09/91	D16A7	96	330007		330095, 330174		
1.6 i Vtec	V Coupe (EJ)	01/94-03/96	D16Y6, D16Z9	92	330007	330059	330095, 330193		
	VI Saloon (EJ, EK)	11/95-02/01	D16Y6, D16Y8	92	330007	330059	330095, 330193		
	VI Fastback (MA)	09/94-01/97	D16Y2	93	330007	330061	330095, 330193		
1.6 VTi	V Saloon (EG, EH)	10/91-11/95	B16A2	118	330007		330095, 330193		
	VI Fastback (MA)	01/97-02/01	B16A2	118	330007	330059	330095, 330193		
	VI Hatchback (EJ, EK)	11/95-02/01	B16A2	118		330059	330095, 330193		
	VI Saloon (EJ, EK)	11/95-02/01	B16A2	118	330007	330059	330095, 330193		
1.6 VTi 16V	IV Hatchback (EG)	10/91-11/95	B16A2	118	330007		330095, 330193		
1.7	VII Saloon (ES)	02/01-09/05	D17A6	85			330648		

OPS Oil Pressure Switches **BLS** Brake Light Switches **TT-RF** Temperature Transmitter and Radiator Fan Switches **RLS** Reverse Light Switches **VAR** Various

ERA S.p.A. Moncalieri (TO) Italy - tel: +39 011 6891511 - fax: +39 011 6472862 - www.eranet.it

Vehicle		Date	Engine	kW	OPS	BLS	TT-RF	RLS	VAR
1.7	VII Hatchback (EU, EP, EV)	01/00-08/05	D17A6	92			330648		
1.7 CTDi	VII Hatchback (EU, EP, EV)	01/02-09/05	4EE-2	74	330007		330137, 330193		
1.7 i	VII Coupe (EM2)	05/01-12/05	D17A8	88			330193, 330648		
1.7 i VTEC	VII Coupe (EM2)	05/01-12/05	D17A5	92			330193, 330648		
1.8	VIII Hatchback (FN, FK)	01/06-	R18A2	103			330648		
	VIII Saloon (FD)	09/05-	R18A1	103			330648		
	VIII Saloon (FD)	02/06-	R18A1	103			330648		
1.8 16V	VI Aerodeck (MB, MC)	04/98-02/01	B18C4	124	330007	330061	330095, 330193		
	VI Fastback (MA)	01/97-02/01	B18C4	124	330007	330061	330095, 330193		
2.0	VIII Hatchback (FN, FK)	12/06-	K20Z4	110			330648		
	VII Saloon (ES)	10/03-09/05	K20A3	118			330648		
2.0 i Sport	VII Hatchback (EU, EP, EV)	01/04-09/05	K20A3	118			330648		
2.0 TDiC	VI Hatchback (EJ, EK)	11/98-10/00	20T2N	77		330059	330095, 330193		
2.0 Type-R	VII Hatchback (EU, EP, EV)	09/01-09/05	K20A2	147	330007		330648		
2.2 CTDi	VIII Hatchback (FN, FK)	01/06-	N22A2	103			330137		
Type R	VIII Hatchback (FN, FK)	09/06-	K20Z4	148			330648		
CONCERTO		**08/89 - 10/96**							
1.4	(HW)	08/89-10/91	D14A1, D14A8	66	330007	330061	330095		
	Saloon (HWW)	08/89-10/91	D14A1, D14A8	66	330007	330061	330095		
1.5 i 16V	(HW)	08/89-03/95	D15B2	66	330007	330061	330095		
	Saloon (HWW)	08/89-05/95	D15B2	66	330007	330061	330095		
1.6 i 16V	(HW)	08/89-03/95	D16Z2	82	330007	330061	330095		
	(HW)	08/89-03/95	D16A8	90	330007	330061	330095		
	Saloon (HWW)	08/89-03/95	D16A8	90	330007	330061	330095		
CR-V		**10/95 -**							
2.0	I (RD)	04/99-02/02	B20Z1	98	330007	330059	330095, 330193		
	II (RD_)	07/02-09/06	K20A4	110			330648		
2.0 16V	I (RD)	01/99-02/02	B20Z1	108	330007	330059	330095, 330193		
2.0 i	III	01/07-	R20A2	110			330648		
2.2 CTDi	II (RD_)	02/05-09/06	N22A2	103			330137		
2.2 i-CTDi	III	01/07-	N22A2	103			330137		
2.4 Vtec All-wheel Drive	II (RD_)	03/02-09/06	K24A1	118			330648		
CRX		**10/87 - 12/98**							
1.6 ESi	III (EH, EG)	03/92-12/98	D16Z6	92	330007		330095, 330193		
1.6 i 16V	II (ED, EE)	10/87-02/92	D16Z5	91	330007		330095		
	II (ED, EE)	10/87-12/89	D16A9	96	330007		330095		
1.6 i 16V Vtec	II (ED, EE)	10/89-02/92	B16A1	110	330007		330095		
1.6 i VTi	III (EH, EG)	03/92-12/98	B16A2	118	330007		330095, 330193		

OPS Oil Pressure Switches **BLS** Brake Light Switches **TT-RF** Temperature Transmitter and Radiator Fan Switches **RLS** Reverse Light Switches **VAR** Various

Vehicle		Date	Engine	kW	OPS	BLS	TT-RF	RLS	VAR
FR-V			**02/05 -**						
1.7	(BE)	02/05-	D17A2	92			330648		
2.0	(BE)	02/05-	K20A9	110			330648		
2.2 i CTDi	(BE)	07/05-	N22A1	103			330137		
HR-V			**03/99 -**						
1.6 16V	(GH)	03/99-	D16W1	77	330007		330095, 330193		
1.6 16V 4WD	(GH)	03/99-	D16W1	77	330007		330095, 330193		
	(GH)	10/99-	D16W5	91	330007		330095, 330193		
INSIGHT			**04/00 - 12/06**						
1.0 Hybrid	(ZE)	04/00-12/06	ECA1	56	330022				
1.0 Vtec	(ZE)	04/00-10/04	ECA1	50	330022				
INTEGRA			**07/93 - 11/01**						
1.8 Type-R	Coupe (DC2, DC4)	11/97-10/01	B18C6	140	330007		330095, 330193		
JAZZ			**10/83 -**						
1.2	II (GD)	03/02-	L12A1	57	330022		330193, 330648		
	III (GE)	07/08-	L12B1	66			330648		
1.4	II (GD)	03/02-07/08	L13A1	61	330022		330193, 330648		
	II (GD)	04/05-	L13A5	65			330648		
1.4 i	III (GE)	07/08-	L13Z1	73			330648		
1.5	II (GD)	04/02-07/08	L15A	81			330648		
45 1.2	I (AA)	02/84-10/86	ER2	33	330006		330174		
LEGEND			**01/86 -**						
2.7 i 24V	I (HS, KA)	01/88-12/90	C27A1	124		330701			
	I Coupe (KA3)	10/87-12/90	C27A1	124	330006	330701	330095		
3.2 i 24V	II (KA7)	01/91-02/96	C32A2	151	330007	330701	330095		
	II Coupe (KA8)	01/91-02/96	C32A2	151	330007	330701	330095		
3.5	III (KA9)	10/04-	C35A8	221			330648		
3.5 i 24V	III (KA9)	02/96-	C35A2	151	330007		330095		
LOGO			**03/99 - 03/02**						
1.3	(GA3)	03/99-03/02	D13B7	48	330007		330193		
NSX			**06/90 - 09/05**						
3.0 24V Vtec	Convertible (NA)	03/95-09/05	C30A3	201		330701			
3.0 24V Vtec	Coupe (NA)	06/90-09/05	C30A3	201	330006	330701	330095		
3.0 24V Vtec Automatic	Convertible (NA)	03/95-09/05	C30A4	188	330006	330701	330095		
3.0 24V Vtec Automatik	Coupe (NA)	06/90-09/05	C30A4	188	330006	330701	330095		
3.2 24V Vtec	Convertible (NA)	01/97-09/05	C32B2	206		330701			
	Coupe (NA)	01/97-09/05	C32B2	206	330006	330701	330095		

OPS Oil Pressure Switches **BLS** Brake Light Switches **TT-RF** Temperature Transmitter and Radiator Fan Switches **RLS** Reverse Light Switches **VAR** Various

ERA S.p.A. Moncalieri (TO) Italy - tel: +39 011 6891511 - fax: +39 011 6472862 - www.eranet.it

Vehicle		Date	Engine	kW	OPS	BLS	TT-RF	RLS	VAR
PRELUDE			**12/91 - 10/00**						
2.0 16V	V (BB)	10/96-10/00	F20A4	98	330007	330059	330095		
2.0 i 16V	IV (BB)	02/92-09/96	F20A4	98	330007		330095		
2.2 16V	V (BB)	10/96-10/00	H22A5	136	330006, 330007		330095		
2.2 i 16V Vtec	IV (BB)	02/93-09/96	H22A2	136	330006	330701	330095		
2.3 i 16V	IV (BB)	02/92-09/96	H23A2	118	330006	330701	330095		
QUINTET			**02/80 - 12/84**						
1.6 EX	(SU)	02/80-12/84	EL	59	330006		330174		
SHUTTLE			**06/94 - 06/04**						
2.2 16V	(RA)	10/94-02/98	F22B8	110	330007		330095, 330193		
2.3 16V	(RA)	10/97-06/04	F23A7	110	330007		330095, 330193		
STREAM			**05/01 -**						
1.7 16V	(RN)	05/01-	D17A2	92	330007		330193, 330648		
2.0 16V	(RN)	05/01-	K20A1	115	330007		330193, 330648		
HYUNDAI									
ACCENT			**10/94 -**						
1.3	I (X-3)	10/94-01/00	G4EH	44	330009, 330567	330081	330100, 330116, 330633	330247	
	Saloon (X-3)	10/94-01/00	G4EH	44	330009, 330567	330081	330100, 330116, 330633	330247	
	I (X-3)	10/94-01/00	G4EH	55	330009, 330567	330081	330100, 330116, 330633	330247	
	II (LC)	01/00-	G4E-A	55	330009, 330567	330081	330632	330569	
	Saloon (LC)	01/00-11/05	G4E-A	55	330009, 330566, 330567	330081	330632	330569	
	Saloon (X-3)	10/94-01/00	G4EH	55	330009, 330567	330081	330100, 330116, 330633	330247	
	II (LC)	01/00-	G4E-A	61	330009, 330567	330081		330569	
	II (LC)	08/02-	--	62	330009, 330567	330081	330632	330569	
	II (LC)	01/00-	G4E-A	63	330009, 330567	330081	330632	330569	
	Saloon (LC)	01/00-11/05	G4E-A	63	330009, 330566, 330567	330081	330632	330569	
1.3 i 12V	I (X-3)	10/94-01/00	G4EH	62	330009, 330567	330081	330100, 330116, 330633	330247	
	Saloon (X-3)	10/94-01/00	G4EH	62	330009, 330567	330081	330100, 330116, 330633	330247	
1.4 GL	III (MC)	11/05-	G4EE	71	330009, 330567				
	Saloon (MC)	11/05-	G4EE	71	330009, 330567				
1.5	II (LC)	01/00-	G4EB	66	330009, 330567	330081	330632	330569	
	Saloon (LC)	01/00-11/05	G4EB	66	330009, 330566, 330567	330081	330574	330569	
	II (LC)	09/00-	G4EC-G	75	330009, 330567	330081	330632	330569	
1.5 CRDi	II (LC)	04/02-	D3-EA	60	330009, 330567		330632	330569	
	Saloon (LC)	01/02-11/05	D3-EA	60	330009, 330567		330632	330569	

OPS Oil Pressure Switches **BLS** Brake Light Switches **TT-RF** Temperature Transmitter and Radiator Fan Switches **RLS** Reverse Light Switches **VAR** Various

Vehicle		Date	Engine	kW	OPS	BLS	TT-RF	RLS	VAR
1.5 i 12V	I (X-3)	10/94-01/00	G4EK	65	330009, 330567	330081	330100, 330116, 330633	330247	
	Saloon (X-3)	10/94-01/00	G4EK	65	330009, 330567	330081	330100, 330116, 330633	330247	
1.5 i 16V	I (X-3)	12/95-01/00	G4ER	73	330009, 330567	330081	330100, 330116, 330633	330247	
	Saloon (X-3)	10/95-01/00	G4ER	73	330009, 330567	330081	330100, 330116, 330633	330247	
1.6	II (LC)	12/02-	G4ED-G	77	330009, 330567	330081	330632	330569	
	Saloon (LC)	12/02-11/05	G4ED-G	77	330009, 330567	330081	330632	330569	
1.6 GLS	III (MC)	11/05-	G4ED	82	330009, 330567				
	Saloon (MC)	11/05-	G4ED	82	330009, 330567				
ATOS			**02/98 -**						
1.0 i	(MX)	02/98-03/02	G4HC	40	330009, 330567	330081	330582, 330665	330262	
	(MX)	03/01-	G4HC-E	43	330009, 330566, 330567	330081	330582, 330665	330262	
1.1	(MX)	08/03-05/05	G4HD	43	330006	330081		330262	
	(MX)	03/04-	G4HG	46		330081			
	(MX)	06/05-	--	46				330262	
ATOS PRIME			**08/99 -**						
1.0 i	(MX)	08/99-	G4HC	40	330009, 330567	330081	330582, 330665	330262	
	(MX)	03/01-	G4HC-E	43	330009, 330566, 330567	330081		330262	
1.1	(MX)	06/03-	G4HD	43	330006, 330566	330081		330262	
	(MX)	09/05-	G4HG	46		330081		330262	
COUPE			**06/96 -**						
1.6 16V	(GK)	03/02-	G4ED-G	77	330009, 330567			330569	
	(GK)	03/02-	G4ED-G	79	330009, 330567			330569	
	(RD)	03/98-04/02	G4GR	85	330009, 330567	330043, 330081	330100, 330116	330247	
1.6 i 16V	(RD)	12/96-04/02	4G61	84	330009, 330567	330043, 330081	330100, 330116, 330574	330247	
2.0	(GK)	08/01-	G4GC-G	100				330569	
	(GK)	03/02-	G4GC-G	102	330009, 330567		330632	330569	
2.0 16V	(RD)	08/96-04/02	G4GF	102	330009, 330567	330043, 330081	330100, 330116	330247	
2.0 GLS	(GK)	02/03-	G4GC-G	105	330009, 330567			330569	
2.7 V6	(GK)	03/02-	G6BA-G	123	330566		330632	330746	
ELANTRA			**06/00 -**						
1.6	(XD)	06/00-07/06	--	66			330574		
	Saloon (XD)	06/00-07/06	--	66	330009, 330567		330574	330569	
	(XD)	05/03-	G4ED-G	77	330009, 330567			330569	
	Saloon (XD)	05/03-	G4ED-G	77	330009, 330567			330569	
	(XD)	06/00-	G4ED-G	79	330009, 330567		330574	330569	
	Saloon (XD)	06/00-	G4ED-G	79	330009, 330567		330574	330569	

OPS Oil Pressure Switches **BLS** Brake Light Switches **TT-RF** Temperature Transmitter and Radiator Fan Switches **RLS** Reverse Light Switches **VAR** Various

ERA S.p.A. Moncalieri (TO) Italy - tel: +39 011 6891511 - fax: +39 011 6472862 - www.eranet.it

Vehicle		Date	Engine	kW	OPS	BLS	TT-RF	RLS	VAR
1.6	(XD)	09/03-	G4GA	82	330009, 330567			330569	
1.8	(XD)	06/00-07/03	--	79	330009, 330567			330569	
	Saloon (XD)	06/00-07/03	--	79	330009, 330567			330569	
	(XD)	06/00-	G4BB	97	330009, 330567			330569	
	Saloon (XD)	06/00-	G4BB	97	330009, 330567			330569	
	(XD)	11/02-	G4GB	98	330009, 330567			330569	
2.0	(XD)	06/00-	G4GC-G	102	330009, 330567			330569	
	Saloon (XD)	06/00-	G4GC-G	102	330009, 330567			330569	
	(XD)	06/00-	G4GC	104	330009, 330567			330569	
	Saloon (XD)	06/00-	G4GC	104	330009, 330567			330569	
	(XD)	10/03-	G4GC	105	330009, 330566, 330567			330569	
	Saloon (XD)	10/03-	G4GC	105	330009, 330566, 330567			330569	
2.0 CRDi	(XD)	04/01-	D4EA	83	330009, 330567			330569	
	Saloon (XD)	04/01-	D4EA	83	330009, 330567			330569	
GALLOPER			**08/98 -**						
2.5 TCi D	II (JK-01)	08/98-	D4BH	77		330081	330680		
2.5 TD	II (JK-01)	08/98-	D4BA	65	330009, 330567	330081	330680		
2.5 TD intercooler	II (JK-01)	08/98-	D4BH	73	330009, 330567	330081			
3.0 V6	II (JK-01)	08/98-	G6AT	104	330009, 330567	330081	330100, 330642		
GETZ			**08/02 -**						
1.1	(TB)	09/02-	G4HD	46	330009, 330566, 330567	330081		330569	
	(TB)	09/05-	G4HD	49		330081		330569	
1.3	(TB)	09/03-	G4E-A	63	330009, 330567	330081		330569	
1.3 i	(TB)	09/02-	G4E-A	60	330009, 330567	330081	330632	330569	
1.4 i	(TB)	08/05-	G4EE	71	330009, 330567	330081		330569	
1.5 CRDi	(TB)	03/03-	D3-EA	60		330081			
1.5 CRDi GLS	(TB)	07/04-08/05	D4FA	75		330081			
1.6	(TB)	09/02-	G4ED-G	77	330009, 330567	330081	330574	330569	
GRANDEUR			**04/05 -**						
2.7	(TG)	05/06-	--	141			330642		
3.3	(TG)	04/05-	G6DB	173			330642		
H-1			**10/97 -**						
2.4	Box	03/00-	G4CS	82	330009, 330567	330081	330642		
	Bus (KMF)	10/97-	G4CS	82	330009, 330567	330081	330642		
	Box	11/01-	--	107	330009, 330567	330081			
	Bus (KMF)	11/01-	--	107		330081			
2.4 4WD	Bus (KMF)	10/97-	G4CS	82	330009, 330567	330081	330642		
2.5 CRDi	Box	08/03-	D4CB	103	330009, 330567	330081			

OPS Oil Pressure Switches **BLS** Brake Light Switches **TT-RF** Temperature Transmitter and Radiator Fan Switches **RLS** Reverse Light Switches **VAR** Various

Vehicle		Date	Engine	kW	OPS	BLS	TT-RF	RLS	VAR
2.5 CRDi	Bus (KMF)	12/02-	--	103	330009, 330566, 330567	330081			
	Flatbed / Chassis	12/02-	--	103	330009, 330567	330081			
2.5 CRDi 4WD	Bus (KMF)	12/02-	--	103	330009, 330566, 330567	330081			
2.5 D	Bus (KMF)	10/97-	D4BB	57	330009, 330567	330081			
	Flatbed / Chassis	06/00-10/05	D4BH	73	330009, 330567	330081			
2.5 TD	Box	03/00-09/00	D4BF	59	330009, 330567	330081			
	Bus (KMF)	10/97-	D4BF	59	330009, 330567	330081			
	Box	03/00-	D4BH	73	330009, 330567	330081			
	Bus (KMF)	10/99-11/01	D4BH	73	330009, 330567	330081			
	Box	10/01-	D4BH	74	330009, 330567	330081	330574		
	Bus (KMF)	11/01-	D4BH	74	330009, 330567	330081	330574		
2.5 TD 4WD	Bus (KMF)	03/01-	D4BH	73	330009, 330567	330081	330574		
	Bus (KMF)	11/01-	D4BH	74	330009, 330567	330081	330574		
H100			**07/93 -**						
2.4	Box	10/97-	G4CS	82	330009, 330567	330040, 330042, 330081	330562, 330642		
	Bus (P)	01/97-03/00	G4CS	84	330009, 330566, 330567	330040, 330042, 330081	330562, 330642, 330679		
	Bus (P)	07/93-03/00	G4CS	90	330009, 330567	330040, 330042, 330081	330562, 330642, 330679		
2.5 D	Box	07/93-12/94	D4BA, D4BX	55	330009, 330567	330040, 330042, 330081	330679		
	Bus (P)	07/93-12/94	D4BA, D4BX	55	330009, 330567	330040, 330042, 330081	330679		
	Box	12/94-03/00	D4BB	57	330009, 330567	330040, 330042, 330081	330679		
	Bus (P)	12/94-03/00	D4BA	57	330009, 330567	330040, 330042, 330081	330679		
2.5 TD	Bus (P)	07/93-03/00	D4BF	59	330009, 330567	330040, 330042, 330081	330679		
i10			**10/07 -**						
1.1		12/07-	G4HG	48	330700				
		01/08-	G4HG	49	330700				
i30			**10/07 -**						
2.0		10/07-	G4GC-G	105	330009, 330567				
LANTRA			**10/90 -**						
1.5 12V	II (J-2)	12/96-09/00	G4EK	65	330009, 330567	330043, 330081	330100, 330116	330247	
	II Wagon (J-2)	04/97-	G4EK	65	330009, 330567	330043, 330081	330100, 330116	330247	
1.5 i.e.	I (J-1)	10/90-11/95	G15B, G4DJ	63	330009, 330567	330043, 330081	330100, 330562, 330633, 330642	330247	
1.6 i	II (J-2)	11/95-09/00	G4GR	66	330009, 330567	330043, 330081	330100, 330116	330247	
	II Wagon (J-2)	02/96-	G4GR	66	330009, 330567	330043, 330081	330100, 330116	330247	
1.6 i.e. 16V	I (J-1)	10/90-11/95	G4CR	78	330009, 330567	330043, 330081	330100, 330562, 330633, 330642	330247	

OPS Oil Pressure Switches **BLS** Brake Light Switches **TT-RF** Temperature Transmitter and Radiator Fan Switches **RLS** Reverse Light Switches **VAR** Various

ERA S.p.A. Moncalieri (TO) Italy - tel: +39 011 6891511 - fax: +39 011 6472862 - www.eranet.it

Vehicle		Date	Engine	kW	OPS	BLS	TT-RF	RLS	VAR
1.6 i.e. 16V	I (J-1)	10/90-11/95	G4CR	84	330009, 330567	330043, 330081	330100, 330562, 330633, 330642	330247	
1.8 16V	II (J-2)	11/95-09/00	G4GM	94	330009, 330567	330043, 330081	330100, 330116	330247	
	II Wagon (J-2)	02/96-	G4GM	94	330009, 330567	330043, 330081	330100, 330116	330247	
1.8 i.e. 16V	I (J-1)	10/90-11/95	G4CN	93	330009, 330567	330043, 330081	330100, 330562, 330633, 330634, 330642	330247	
1.9 D	II (J-2)	03/98-09/00	DJY	50	330023	330043, 330081	330109, 330160, 330639, 330675	330247	
	II Wagon (J-2)	03/98-	DJY	50	330023	330043, 330081	330109, 330160, 330639, 330675	330247	
2.0 16V	II (J-2)	08/96-09/00	G4GF	102	330009, 330567	330043, 330081	330100, 330116	330247	
	II Wagon (J-2)	12/96-	G4GF	102	330009, 330567	330043, 330081	330100, 330116	330247	
MATRIX			**06/01 - 12/05**						
1.5 CRDi	(FC)	10/01-	D3-EA	60	330009, 330566, 330567			330569	
1.6	(FC)	06/01-	G4ED-G	76	330009, 330566, 330567		330574, 330632	330569	
1.8	(FC)	06/01-	G4GB-G	90	330009, 330566, 330567		330632	330569	
PONY			**10/85 - 01/95**						
1.3	(X-2)	10/89-01/95	G4DG	43	330009, 330567		330100, 330562, 330668	330247	
	(X-2)	10/89-01/95	--	49	330009, 330567		330100, 330562, 330668	330247	
		10/85-09/89	G13B	50	330009, 330567				
	Saloon	10/85-09/89	G13B	50	330009, 330567				
1.5		10/85-09/89	G15B, G4DJ	53	330009, 330567				
	(X-2)	10/89-01/95	G15B, G4DJ	53	330009, 330567		330100, 330562, 330668	330247	
	Saloon	10/85-09/89	G15B, G4DJ	53	330009, 330567				
1.5 i	(X-2)	10/89-01/95	G15B, G4DJ	61	330009, 330567		330100, 330562, 330668	330247	
	(X-2)	10/89-01/95	G15B, G4DJ	62	330009, 330567		330100, 330562, 330668	330247	
PONY/EXCEL			**01/90 - 01/95**						
1.3	Saloon (X-2)	01/90-01/95	--	49	330009, 330567		330100, 330562, 330668	330247	
1.5	Saloon (X-2)	01/90-01/95	G15B, G4DJ	53	330009, 330567		330100, 330562, 330668	330247	
1.5 i	Saloon (X-2)	01/90-01/95	G15B, G4DJ	61	330009, 330567		330100, 330562, 330668	330247	
	Saloon (X-2)	01/90-01/95	G15B, G4DJ	62	330009, 330567		330100, 330562, 330668	330247	
S COUPE			**02/90 - 05/96**						
1.5 i	(SLC)	02/90-05/96	G15B, G4DJ	62	330009, 330567	330043, 330081	330100, 330562, 330668	330247	
	(SLC)	04/92-05/96	G4EK	65	330009, 330567	330043, 330081	330100, 330116	330247	
1.5 i Turbo	(SLC)	04/91-05/96	G4EK-TC	85			330100, 330116	330247	

OPS Oil Pressure Switches **BLS** Brake Light Switches **TT-RF** Temperature Transmitter and Radiator Fan Switches **RLS** Reverse Light Switches **VAR** Various

Vehicle		Date	Engine	kW	OPS	BLS	TT-RF	RLS	VAR
SANTA FÉ		**11/00 -**							
2.0	I (SM)	08/01-03/06	G4BP	99	330009, 330566, 330567	330081			
2.0 CRDi	I (SM)	08/01-03/06	D4EA	83	330009, 330567	330081			
2.0 CRDi 4x4	I (SM)	04/01-03/06	D4EA	83	330009, 330567	330081			
	I (SM)	08/03-03/06	D4EA	92	330009, 330566, 330567	330081			
2.4 16V	I (SM)	02/01-03/06	G4JS-G	100	330009, 330567	330081			
	I (SM)	02/01-03/06	G4JS-G	107	330009, 330567	330081			
2.4 16V 4x4	I (SM)	02/01-03/06	G4JS-G	100	330009, 330567	330081			
	I (SM)	02/01-03/06	G4JS-G	107	330009, 330567	330081			
2.7	II (CM)	03/06-	--	125			330642		
	I (SM)	10/05-03/06	G6EA	139			330642		
2.7 4x4	II (CM)	03/06-	--	125			330642		
	I (SM)	10/05-03/06	G6EA	139			330642		
2.7 V6 4x4	I (SM)	02/01-03/06	G6BA-G	127		330081			
2.7 V6 GLS	II (CM)	03/06-	G6EA	139			330642		
2.7 V6 GLS 4x4	II (CM)	03/06-	G6EA	139			330642		
SANTAMO		**10/98 -**							
2.0 16V		05/99-	--	102	330009, 330567		330100, 330642	330247	
2.0 16V 4x4		05/99-	--	102	330009, 330567		330100, 330642	330247	
SONATA		**09/88 -**							
1.8 GLS	III (Y-3)	07/96-05/98	G4DM	63	330009, 330567	330043	330100, 330642	330247	
1.8 i	II (Y-2)	09/88-10/93	4G62	70			330634		
	III (Y-3)	05/93-06/98	G4CM	72	330009, 330567	330043	330100, 330562, 330642	330247	
2.0 16V	IV (EF)	10/01-11/04	G4JP-EG	96	330009, 330567			330569	
	IV (EF)	06/98-10/01	G4JP-G	100	330009, 330567		330100, 330619		
2.0 i	III (Y-3)	08/96-06/98	--	70	330009, 330567	330043	330100, 330642	330247	
	II (Y-2)	09/88-08/91	G4CP	74			330634		
	III (Y-3)	06/94-08/96	G4CP	77	330009, 330567	330043	330100, 330562, 330642	330247	
	II (Y-2)	01/91-10/93	G4CP-U	80			330634		
2.0 i 16V	III (Y-3)	06/96-06/98	G4CP-DM	92	330009, 330567	330043	330100, 330642, 330667	330247	
	II (Y-2)	01/91-10/93	G4CP-D	96			330634		
	III (Y-3)	05/93-06/98	G4CP-D	102	330009, 330567	330043	330100, 330562, 330642, 330667	330247	
2.0 VVTi GLS	V (NF)	05/05-	--	106			330642		
2.4	V (NF)	01/05-	G4KC	119	330566		330642		
2.4 16V	IV (EF)	03/98-10/01	--	105	330009, 330567		330100, 330619		
2.4 i	II (Y-2)	09/88-08/91	G4CS	83			330634		
2.5 V6 24V	IV (EF)	06/98-10/01	G6BV-G	118	330009, 330567		330100, 330619		

OPS Oil Pressure Switches **BLS** Brake Light Switches **TT-RF** Temperature Transmitter and Radiator Fan Switches **RLS** Reverse Light Switches **VAR** Various

ERA S.p.A. Moncalieri (TO) Italy - tel: +39 011 6891511 - fax: +39 011 6472862 - www.eranet.it

Vehicle		Date	Engine	kW	OPS	BLS	TT-RF	RLS	VAR
2.7 V6	IV (EF)	10/01-11/04	G6BA-G	127	330009, 330566, 330567		330100, 330619	330569	
	IV (EF)	11/02-11/04	G6BA	129	330009, 330567		330100, 330619	330569	
3.0 i V6	II (Y-2)	01/91-10/93	G6AT	107			330634		
	III (Y-3)	05/93-06/98	G6AT	107	330672	330043	330100, 330562, 330634, 330642	330247	
3.3	V (NF)	01/05-	G6DB	171			330642		
STAREX			**06/97 -**						
2.4	(H1)	06/97-	G4CS	82	330009, 330567	330081	330642		
	(H1)	02/03-04/04	--	101	330009, 330567	330081			
2.4 4WD	(H1)	02/98-	G4CS	82	330009, 330567	330081	330642		
2.5 CRDi	(H1)	12/02-	--	103	330009, 330567	330081			
2.5 CRDi 4x4	(H1)	12/02-	--	103	330009, 330567	330081			
2.5 TCi	(H1)	10/97-04/04	D4BH	73	330009, 330567	330081			
	(H1)	05/04-	D4BH	74		330081			
2.5 TD	(H1)	06/97-	D4BF	59	330009, 330567	330081			
2.5 TD 4WD	(H1)	02/98-	D4BF	59	330009, 330567	330081			
STELLAR			**10/83 - 12/91**						
1.4	(F31_, SF2_)	10/83-08/86	4G33	50	330009, 330567				
1.6	(F31_, SF2_)	10/83-12/91	G32B	56	330009, 330567				
TERRACAN			**06/01 -**						
2.5 D	(HP)	06/01-10/03	D4BH	59	330009, 330567				
	(HP)	06/01-10/03	--	74	330009, 330567				
2.5 TD	(HP)	12/01-	D4BH	74	330009, 330566, 330567		330680		
2.9 CRDi	(HP)	11/01-07/03	J3	110	330009, 330567	330043			
2.9 CRDi 4WD	(HP)	12/01-	J3	110	330009, 330566, 330567	330043			
	(HP)	11/03-	J3	120	330009, 330567	330043			
3.5 i V6 4WD	(HP)	12/01-	G6CU	143	330566, 330673				
	(HP)	12/01-	G6CU	147	330673				
TRAJET			**03/00 -**						
2.0	(FO)	03/00-	G4JP-G	100	330009, 330566, 330567			330569	
	(FO)	01/04-	G4GC-G	103	330009, 330567			330569	
	(FO)	11/03-	G4GC	104	330009, 330567			330569	
2.0 CRDi	(FO)	04/01-	D4EA	83	330009, 330567				
	(FO)	08/05-	D4EA	92	330009, 330567			330569	
2.7 V6	(FO)	09/00-	G6BA-G	127	330009, 330567				
TUCSON			**08/04 -**						
2.0	(JM)	08/04-	G4GC	104	330009, 330567			330569	

OPS Oil Pressure Switches **BLS** Brake Light Switches **TT-RF** Temperature Transmitter and Radiator Fan Switches **RLS** Reverse Light Switches **VAR** Various

Vehicle		Date	Engine	kW	OPS	BLS	TT-RF	RLS	VAR
2.0 All-wheel Drive	(JM)	08/04-	G4GC	104	330009, 330567			330569	
2.7 All-wheel Drive	(JM)	08/04-	G6BA-G	129	330566				
XG			**12/98 -**						
25		12/98-	--	120	330009, 330567		330100, 330619, 330632	330569	
30/300		12/98-	G6CT-G	138	330006, 330566			330569	
350		04/03-	G6CU	145	330566, 330673			330569	
INFINITI									
FX			**01/03 -**						
3.5		02/03-	VQ35DE	206	330697	330711, 330719			
35		01/03-	VQ35DE	206	330697	330711, 330719			
4.5		02/03-	VK45DE	232	330697	330711, 330719			
45		01/03-	VK45DE	232	330697	330711, 330719			
G20			**01/90 - 12/97**						
2.0		01/90-12/97	SR20DE	85	330359	330044	330098	330257	
J30			**01/92 - 12/97**						
3.0		01/92-12/97	VG30DE	157	330359	330044	330098, 330655		
M30			**01/89 - 12/93**						
3.0	Convertible	01/90-12/93	VG30E	121	330359	330044	330098		
	Coupe	01/89-12/93	VG30E	121	330359	330044	330098		
M35			**01/05 -**						
3.5 Luxury		01/05-	VQ35DE	206	330697	330719			
3.5 Luxury All-wheel Drive		01/05-	VQ35DE	206	330697	330719			
M45			**01/05 -**						
4.5 Luxury		01/05-	VK45DE	250	330697	330719			
Q45			**01/89 - 12/96**						
4.5		01/89-12/93	VH45DE	205	330359	330044	330098, 330655		
INNOCENTI									
ELBA			**08/91 - 12/96**						
1.3	(146)	08/91-	146 A5.000	49		330048	330082, 330273	330241	
1.4 i.e.	(146)	09/94-12/96	146 C5.000, 146 D5.000	49		330048	330082, 330116, 330228	330243	
1.5 i.e.	(146)	08/92-09/94	149 C1.000	55		330048	330082, 330116, 330228	330241	
1.6 i.e.	(146)	09/94-12/96	146 C6.000, 146 D6.000	55		330048	330082, 330116, 330228	330243	
1.7 D	(146)	08/91-12/96	146 B2.000	42		330048	330082, 330202	330241, 330243	

OPS Oil Pressure Switches **BLS** Brake Light Switches **TT-RF** Temperature Transmitter and Radiator Fan Switches **RLS** Reverse Light Switches **VAR** Various

ERA S.p.A. Moncalieri (TO) Italy - tel: +39 011 6891511 - fax: +39 011 6472862 - www.eranet.it

Vehicle		Date	Engine	kW	OPS	BLS	TT-RF	RLS	VAR
ISUZU									
TROOPER		**01/83 - 12/91**							
2.2 D 4x4	(UBS)	05/84-12/89	C223	39		330701			
	Open Off-Road Vehicle (UBS)	05/84-07/89	C223	39		330701			
2.6 4x4	(UBS)	11/86-07/91	4ZE1	85		330701			
2.6 i	Open Off-Road Vehicle (UBS)	10/87-12/91	4ZE1	85		330701			
IVECO									
DAILY I		**01/78 - 05/99**							
30-10	Box Body / Estate	01/97-	8140.23.	76	330000		330148, 330614	330501, 330522	
	Flatbed / Chassis	01/98-05/99	8140.23.	76	330000		330148, 330614	330501, 330522	
30-10 C	Box Body / Estate	01/98-	8140.23.	76	330000		330148, 330614	330501, 330522	
	Box Body / Estate	01/97-	8140.23.	76	330000		330148, 330614	330501, 330522	
30-8	Box Body / Estate	01/78-12/89	8140.61.200	53	330000	330032	330082, 330148	330522	
	Flatbed / Chassis	01/78-12/89	8140.61.200	53	330000	330032	330082, 330148	330522	
	Box Body / Estate	01/89-08/98	8140.07.2700, 8140.07.2712	55	330000	330032	330148, 330614	330501, 330522	
	Box Body / Estate	01/89-08/98	8140.07.2700, 8140.07.2712	55	330000	330032	330148, 330614	330501, 330522	
	Flatbed / Chassis	01/92-08/98	8140.07.2700	55	330000	330032	330148, 330614	330501, 330522	
	Flatbed / Chassis	01/92-08/98	8140.07.2700	55	330000	330032	330148, 330614	330501, 330522	
	Box Body / Estate	01/96-08/98	8140.67F.	60	330000		330148, 330614	330501, 330522	
	Box Body / Estate	01/89-08/98	8140.67F.	60	330000	330032	330148, 330614	330501, 330522	
	Box Body / Estate	01/89-08/98	8140.67F.	60	330000	330032	330148, 330614	330501, 330522	
	Flatbed / Chassis	01/96-08/98	8140.67F.	60	330000		330148, 330614	330501, 330522	
	Flatbed / Chassis	01/92-08/98	8140.67F.	60	330000	330032	330148, 330614	330501, 330522	
	Flatbed / Chassis	01/92-08/98	8140.67F.	60	330000	330032	330148, 330614	330501, 330522	
	Box Body / Estate	09/98-	8140.63.	62	330000		330148, 330614	330501, 330522	
	Flatbed / Chassis	09/98-05/99	8140.63.	62	330000		330148, 330614	330501, 330522	
	Flatbed / Chassis	09/98-05/99	8140.63.	62	330000		330148, 330614	330501, 330522	
30-8 V	Box Body / Estate	09/98-	8140.63.	62	330000		330148, 330614	330501, 330522	
35-10	Box Body / Estate	01/85-12/89	8140.21.200	68	330000	330032	330082	330522	
	Flatbed / Chassis	01/85-12/89	8140.21.200	68	330000	330032	330082	330522	
	Flatbed / Chassis	01/89-12/96	8140.97.2781	68	330000	330032	330116, 330148, 330614	330501, 330522	
	Box Body / Estate	01/89-08/98	8140.47R.2790	76	330000	330032	330116, 330148, 330614	330501, 330522	
	Box Body / Estate	01/96-	8140.23.	76	330000		330148, 330614	330501, 330522	
	Flatbed / Chassis	01/96-05/99	8140.23.	76	330000		330148, 330614	330501, 330522	
	Flatbed / Chassis	01/89-12/96	8140.47R.2790	76	330000	330032	330116, 330148, 330614	330501, 330522	
	Box Body / Estate	01/89-08/98	8140.47R	80	330000	330032	330116, 330148, 330614	330501, 330522	
35-10 K	Dumptruck	01/97-	8140.23.	76	330000		330148, 330614	330501, 330522	
35-12	Box Body / Estate	01/90-04/96	8140.47.2700	85	330000	330032	330148, 330614	330501	

OPS Oil Pressure Switches **BLS** Brake Light Switches **TT-RF** Temperature Transmitter and Radiator Fan Switches **RLS** Reverse Light Switches **VAR** Various

Vehicle		Date	Engine	kW	OPS	BLS	TT-RF	RLS	VAR
35-12	Flatbed / Chassis	01/90-04/96	8140.47.2700	85	330000	330032	330148, 330614	330501	
	Flatbed / Chassis	05/96-05/99	8140.43.	90	330000		330148, 330614	330501, 330522	
35-12 K	Dumptruck	09/96-08/98	8140.43.	90	330000		330148, 330614	330501, 330522	
35-8	Box Body / Estate	01/78-12/89	8140.61.200	53	330000	330032	330082, 330148	330522	
	Flatbed / Chassis	01/78-12/89	8140.61.200	53	330000	330032	330082, 330148	330522	
	Box Body / Estate	01/91-08/98	8140.07.2700, 8140.07.2712	55	330000	330032	330148, 330614	330501, 330522	
	Flatbed / Chassis	01/89-08/98	8140.07.2700, 8140.07.2712	55	330000	330032	330148, 330614	330501, 330522	
	Box Body / Estate	01/91-08/98	8140.67F.	60	330000	330032	330148, 330614	330501, 330522	
	Flatbed / Chassis	01/89-08/98	8140.67F.	60	330000	330032	330148, 330614	330501, 330522	
	Box Body / Estate	09/98-	8140.63.	62			330148, 330614	330501, 330522	
	Flatbed / Chassis	09/98-05/99	8140.63.	62			330148, 330614	330501, 330522	
35-8 K	Dumptruck	09/98-	8140.63.	62			330148, 330614	330501, 330522	
40-10	Flatbed / Chassis	01/85-12/89	8140.27 S	68			330148		
40-10 4x4	Box Body / Estate	01/97-	8140.23.	76			330148		
40-10 V	Box Body / Estate	01/85-12/89	8140.27 S	68			330148		
	Box Body / Estate	01/90-04/96	8140.27.2720	76			330082		
40-10 W 4x4	Flatbed / Chassis	01/97-05/99	8140.23.	76			330148		
40-8	Flatbed / Chassis	01/83-06/89	8140.61.200	53			330082		
40-8 V	Box Body / Estate	01/83-06/89	8140.61.200	53			330082		
45-10	Flatbed / Chassis	01/85-12/89	8140.21.200	68			330082		
45-10 V	Box Body / Estate	01/85-12/89	8140.21.200	68			330082		
49-10	Flatbed / Chassis	01/85-12/89	8140.21.200	68			330082		
	Flatbed / Chassis	05/96-05/99	8140.23.	76			330148		
49-10 K	Dumptruck	05/96-	8140.23.	76			330148		
49-10 V	Box Body / Estate	01/85-12/89	8140.21.200	68			330082		
49-12	Flatbed / Chassis	06/90-04/96	8140.47.2711, 8140.47.2721	85			330148		
49-12 K	Dumptruck	06/90-04/96	8140.47.2711, 8140.47.2721	85			330148		
49-12 V	Box Body / Estate	06/90-04/96	8140.47.2711, 8140.47.2721	85			330148		
59-12	Flatbed / Chassis	05/91-04/96	8140.47.2700, 8140.47.2711	85			330148		
	Flatbed / Chassis	05/96-05/99	8140.43.	90			330148		
59-12 K	Dumptruck	05/91-04/96	8140.47.2700, 8140.47.2711	85			330148		
	Dumptruck	05/96-	8140.43.	90			330148		
59-12 V	Box Body / Estate	05/91-04/96	8140.47.2700, 8140.47.2711	85			330148		
	Box Body / Estate	05/96-	8140.43.	90			330148		
A 40-10	Bus	01/91-12/96	8140.27.2720	76			330082		
	Bus	09/96-	8140.23.	76			330148		

OPS Oil Pressure Switches **BLS** Brake Light Switches **TT-RF** Temperature Transmitter and Radiator Fan Switches **RLS** Reverse Light Switches **VAR** Various

ERA S.p.A. Moncalieri (TO) Italy - tel: +39 011 6891511 - fax: +39 011 6472862 - www.eranet.it

Vehicle		Date	Engine	kW	OPS	BLS	TT-RF	RLS	VAR
DAILY II		**05/99 -**							
29 L 10	Flatbed / Chassis	09/02-	F1AE0481A	70		330051, 330520, 330618	330137		
29 L 10 V	Box Body / Estate	09/02-	F1AE0481A	70		330051, 330520, 330618	330137		
29 L 12	Flatbed / Chassis	09/02-	F1AE0481B	85		330051, 330520, 330618	330137, 330148		
29 L 12 V	Box Body / Estate	09/02-	F1AE0481B	85		330051, 330520, 330618	330137, 330148		
29 L 14	Box Body / Estate	01/05-04/06	F1AE0481M	100			330137		
	Flatbed / Chassis	11/05-	F1AE0481M	100			330137		
35 C 10 V , 35 S 10 V	Flatbed / Chassis	09/02-	F1AE0481A	70		330051, 330520, 330618	330137		
35 C 12 , 35 S 12	Flatbed / Chassis	09/02-	F1AE0481B	85		330051, 330520, 330618	330137		
35 C 12 V, 35 S 12 V	Box Body / Estate	09/02-	F1AE0481B	85		330051, 330520, 330618	330137		
35 C 14	Box Body / Estate	09/04-04/06	F1CE0481A	100			330137		
	Flatbed / Chassis	09/04-04/06	F1CE0481A	100			330137		
35 C 14, 35 S 14	Box Body / Estate	01/05-04/06	F1AE0481M	100			330137		
	Flatbed / Chassis	01/05-04/06	F1AE0481M	100			330137		
35 C 15	Flatbed / Chassis	11/01-	8140.43N	107		330051, 330520, 330618	330137		
35 C 17, 35 S 17	Box Body / Estate	01/05-04/06	F1CE0481B	122			330137		
	Flatbed / Chassis	01/05-04/06	F1CE0481B	122			330137		
35 S 10	Box Body / Estate	09/02-	F1AE0481A	70		330051, 330520, 330618	330137		
35 S 11 V,35 C 11 V	Box Body / Estate	05/99-	8140.43C	78		330051	330293		
35 S 11,35 C 11	Flatbed / Chassis	05/99-	8140.43C	78		330051	330293		
35 S 13 V,35 C 13 V	Box Body / Estate	05/99-	8140.43S	92		330051, 330520, 330618	330137, 330293		
35 S 13,35 C 13	Flatbed / Chassis	05/99-	8140.43S	92		330051, 330520, 330618	330137, 330293		
35 S 15 V, 35 C 15 V	Box Body / Estate	11/02-	8140.43N	107		330051, 330520, 330618	330137		
35 S 9 V,35 C 9 V	Box Body / Estate	05/99-	8140.63.	62		330051			
35 S 9,35 C 9	Flatbed / Chassis	05/99-	8140.63.	62		330051			
40 C 14	Box Body / Estate	09/04-04/06	F1CE0481A	100			330137		
	Flatbed / Chassis	09/04-04/06	F1CE0481A	100			330137		
40 C 17, 40 S 17	Box Body / Estate	01/05-04/06	F1CE0481B	122			330137		
	Flatbed / Chassis	01/05-04/06	F1CE0481B	122			330137		
50 C 14	Box Body / Estate	09/04-04/06	F1CE0481A	100			330137		
	Flatbed / Chassis	09/04-04/06	F1CE0481A	100			330137		
50 C 17	Box Body / Estate	09/04-04/06	F1CE0481B	122			330137		
	Flatbed / Chassis	09/04-04/06	F1CE0481B	122			330137		
65 C 14	Box Body / Estate	09/04-04/06	F1CE0481A	100			330137		
	Flatbed / Chassis	09/04-04/06	F1CE0481A	100			330137		

OPS Oil Pressure Switches **BLS** Brake Light Switches **TT-RF** Temperature Transmitter and Radiator Fan Switches **RLS** Reverse Light Switches **VAR** Various

Vehicle		Date	Engine	kW	OPS	BLS	TT-RF	RLS	VAR
65 C 17	Box Body / Estate	09/04-04/06	F1CE0481B	122			330137		
	Flatbed / Chassis	09/04-04/06	F1CE0481B	122			330137		
DAILY III		**05/06 -**							
29L10	Flatbed / Chassis	05/06-	F1AE0481FA	70			330137		
29L10 V	Box Body / Estate	05/06-	F1AE0481FA	70			330137		
29L12	Flatbed / Chassis	05/06-	F1AE0481GA	85			330137		
29L12 V, 29L12 V/P	Box Body / Estate	05/06-	F1AE0481GA	85			330137		
29L14	Flatbed / Chassis	05/06-	F1AE0481HA	100			330137		
29L14 C, 29L14 C/P, 29L14 V, 29L14 V/P	Box Body / Estate	05/06-	F1AE0481HA	100			330137		
35C10, 35S10	Box Body / Estate	05/06-	F1AE0481FA	70			330137		
	Flatbed / Chassis	05/06-	F1AE0481FA	70			330137		
35C17 K, 35C17 DK, 35S17 K, 35S17 DK	Dumptruck	07/07-	F1CE0481HA	125			330137		
35C17 V, 35C17 V/P, 35S17 V, 35S17 V/P	Box Body / Estate	07/07-	F1CE0481HA	125			330137		
35C17, 35C17 /P, 35S17, 35S17 /P, 35S17 D	Flatbed / Chassis	07/07-	F1CE0481HA	125			330137		
35S17 W, 35S17 WD	Flatbed / Chassis	07/07-	F1CE0481HA	125			330137		
40C17 K, 40C17 DK	Dumptruck	07/07-	F1CE0481HA	125			330137		
40C17 V, 40C17 V/P	Box Body / Estate	07/07-	F1CE0481HA	125			330137		
40C17, 40C17 /P, 40S17, 40S17 /P, 40S17 D	Flatbed / Chassis	07/07-	F1CE0481HA	125			330137		
EuroCargo		**01/91 -**							
100 E 21		01/91-	8060.45.4100 TCA, 8060.45.4180	152	330684				
EuroStar		**01/93 - 02/02**							
LD 260 E 48 Y/PS		01/93-02/02	F3BE0681E	353			330137		
LD 440 E 39 TX, LD 440 E 39 TX/P		11/99-	F3AE0681E	287			330137		
LD 440 E 42 T/P		01/93-02/02	8210.42L.	309	330684			330446	
LD 440 E 42 TZ		01/93-02/02	8210.42L.	309	330684			330446	
P/PA-Haubenfahrzeuge		**12/79 - 12/93**							
190-30 N		04/87-12/90	8210.22.175	224				330444	
		01/91-12/93	8210.22.175	224				330444	
330-30 N		10/87-12/90	8210.22X.069 , 8210.22X.575	224				330444	
		01/91-12/92	8210.22X.069 , 8210.22X.575	224				330444	
		10/87-12/90	8210.22X.069 , 8210.22X.575	224				330444	
		10/87-12/92	8210.22X.069 , 8210.22X.575	224				330444	

OPS Oil Pressure Switches **BLS** Brake Light Switches **TT-RF** Temperature Transmitter and Radiator Fan Switches **RLS** Reverse Light Switches **VAR** Various

ERA S.p.A. Moncalieri (TO) Italy - tel: +39 011 6891511 - fax: +39 011 6472862 - www.eranet.it

Vehicle	Date	Engine	kW	OPS	BLS	TT-RF	RLS	VAR
Trakker	**10/04 -**							
AD 190T41 W, AT 190T41 W	03/06-	F3BE3681D	302			330137		
AD 190T41, AT 190T41	03/06-	F3BE3681D	302			330137		
AD 260T41 W, AD 380T41 W, AT 260T41 W, AT 380T41 W	03/06-	F3BE3681D	302			330137		
AD 260T41, AD 380T41, AT 260T41, AT 380T41	03/06-	F3BE3681D	302			330137		
AD 260T45 W, AD 380T45 W, AT 260T45 W, AT 380T45 W	03/06-	F3BE3681C	332			330137		
AD 260T45, AD 380T45, AT 260T45, AT 380T45	03/06-	F3BE3681C	332			330137		
AD 260T50, AD 380T50, AT 260T50, AT 380T50	03/06-	F3BE3681B	368			330137		
AD 340T41 B	06/06-	F3B3681D	301			330137		
AD 340T41, AT 340T41	06/06-	F3B3681D	301			330137		
	03/06-	F3BE3681D	302			330137		
AD 340T45 B	06/06-	F3B3681C	332			330137		
AD 340T45, AD 340T45 /P, AT 340T45, AT 34T45 /P	06/06-	F3BE3681C	332			330137		
AD 340T45, AT 340T45	03/06-	F3BE3681C	332			330137		
AD 380T50	03/07-	F3BE3681B	368			330137		
AD 400T41 T, AT 400T41 T	03/06-	F3BE3681D	302			330137		
AD 400T41 WT, AT 400T41 WT	03/06-	F3BE3681D	302			330137		
AD 400T45 T, AT 400T45 T	03/06-	F3BE3681C	332			330137		
AD 400T45 WT, AT 400T45 WT	03/06-	F3BE3681C	332			330137		
AD 400T50 T, AT 400T50 T	03/06-	F3BE3681B	368			330137		
AD 410T41, AT 410T41	06/06-	F3BE3681D	301			330137		
	03/06-	F3BE3681D	302			330137		
AD 410T45 W	03/06-	F3BE3681C	332			330137		
	07/07-	F3B3681C	332			330137		
AD 410T45, AT 410T45	03/06-	F3BE3681C	332			330137		
	06/06-	F3B3681C	332			330137		
AD 410T50, AT 410T50	03/06-	F3BE3681B	368			330137		
	06/06-	F3BE0681B	368			330137		
AD 440T41 T, AT 440T41 T	03/06-	F3BE3681D	302			330137		
AD 440T45 T, AT 440T45 T	03/06-	F3BE3681C	332			330137		
AD 440T50 T, AT 440T50 T	03/06-	F3BE3681B	368			330137		

Vehicle		Date	Engine	kW	OPS	BLS	TT-RF	RLS	VAR
AD 720T41 T, AT 720T41 T		03/06-	F3BE3681D	302			330137		
AD 720T41 WT, AT 720T41 WT		03/06-	F3BE3681D	302			330137		
AD 720T45 T, AT 720T45 T		03/06-	F3BE3681C	332			330137		
AD 720T45 WT, AT 720T45 WT		03/06-	F3BE3681C	332			330137		
AD 720T50 T, AT 720T50 T, AT 720T50 TP		03/06-	F3BE3681B	368			330137		
TurboStar			**07/84 - 12/93**						
190-42		07/84-09/86	8280.22.201, 8280.22.205	309	330690				
		10/86-12/90	8280.22.201, 8280.22.205	309	330690				
190-42 T		07/84-09/86	8280.22.201, 8280.22.205	309	330690				
		10/86-12/90	8280.22.201, 8280.22.205	309	330690				
JAGUAR									
S-TYPE			**01/99 -**						
2.5 V6	(CCX)	04/02-	--	147		330734			
2.7 D	(CCX)	06/04-	--	152		330734			
3.0 V6	(CCX)	01/99-	AJ-V6	175		330734			
4.0 V8	(CCX)	01/99-04/02	AJ-V8	203		330734	330640		
4.2 V8	(CCX)	04/02-	--	219		330734	330640		
R 4,2 V8	(CCX)	04/02-	--	291		330734			
X-TYPE			**06/01 -**						
2.0 D	(CF1)	07/03-10/05	R4-X404	96		330597, 330734		330611	
	Estate	02/04-10/05	R4-X404	96		330597, 330734		330611	
2.0 V6	(CF1)	03/02-10/05	--	115		330597, 330734		330611	
	Estate	11/03-	--	115		330597, 330734		330611	
2.2 D	(CF1)	01/07-	LJ46G	107		330597, 330734		330580	
	Estate	01/07-	LJ46G	107		330597, 330734		330580	
	(CF1)	10/05-	LJ46G	114		330597, 330734		330580	
	Estate	10/05-	LJ46G	114		330597, 330734		330580	
2.5	Estate	02/04-	--	144		330597, 330734		330611	
2.5 V6	(CF1)	06/01-	--	144		330597, 330734		330611	
3.0	Estate	02/04-	--	169		330597, 330734		330611	
3.0 V6	(CF1)	06/01-	--	169		330597, 330734		330611	
XJ			**05/03 -**						
6 2,7 D	(X350, X358)	10/05-	--	152		330734			
6 3.0	(X350, X358)	05/03-	AJ-V6	175		330734	330640		
8 3.5	(X350, X358)	05/03-	--	190		330734	330640		
8 4.2	(X350, X358)	05/03-	--	219		330734	330640		
R 4.2	(X350, X358)	05/03-	--	291		330734	330640		

OPS Oil Pressure Switches **BLS** Brake Light Switches **TT-RF** Temperature Transmitter and Radiator Fan Switches **RLS** Reverse Light Switches **VAR** Various

ERA S.p.A. Moncalieri (TO) Italy - tel: +39 011 6891511 - fax: +39 011 6472862 - www.eranet.it

Vehicle		Date	Engine	kW	OPS	BLS	TT-RF	RLS	VAR
XK			**03/06 -**						
3.5 XK	Coupe (_J43_)	07/07-	--	190			330640		
3.6	Convertible (_J43_)	10/07-	--	190			330640		
4.2 XK8	Convertible (_J43_)	03/06-	--	219			330640		
	Coupe (_J43_)	03/06-	--	219			330640		
4.2 XKR	Coupe (_J43_)	03/06-	--	291			330640		
	Convertible (_J43_)	03/06-	--	306			330640		
	Coupe (_J43_)	03/06-	--	306			330640		
XK 8			**03/96 -**						
4.0	Convertible (QDV)	03/96-	CC, CE	209			330640		
	Coupe (QEV)	03/96-	CC, CE	209			330640		
	Convertible (QDV)	02/98-	EC	267			330640		
	Coupe (QEV)	02/98-	EC	267			330640		
4.2	Convertible (QDV)	08/02-	--	219			330640		
	Coupe (QEV)	08/02-	--	219			330640		
R 4,2	Convertible (QDV)	08/02-	--	291			330640		
	Coupe (QEV)	08/02-	--	291			330640		
JEEP									
GRAND CHEROKEE			**09/91 - 04/99**						
5.2	I (ZJ)	10/95-04/99	Y01	156			330659		
5.2 i	I (ZJ)	01/92-04/99	ELF	155			330659		
	I (ZJ)	09/92-04/99	Y	158			330659		
5.9 i	I (ZJ)	08/97-04/99	--	177			330659		
KIA									
AVELLA			**11/95 - 12/01**						
1.3		11/95-12/01	B3	55	330015	330039	330100, 330655		
	Hatchback	11/95-12/01	--	55	330015	330039	330100, 330655		
1.5		02/97-12/01	--	55	330015	330039	330100, 330655		
	Hatchback	02/97-12/01	--	55	330015	330039	330100, 330655		
BESTA			**02/96 -**						
2.2 D	Box	02/96-	R2	48	330008	330039	330100		
CARENS			**11/00 -**						
1.6	II (FJ)	07/02-	--	77	330015	330039	330581		
1.8	II (FJ)	07/02-	--	93	330015	330039			
1.8 i	I (FC)	11/00-07/02	T8	81	330015	330039	330100		
2.0 CRDi	II (FJ)	07/02-	D4EA	83	330009, 330567	330701		330569	
	II (FJ)	11/05-	D4EA	103		330701			
2.0 CVVT	II (FJ)	08/04-	G4GC	102	330009, 330567	330701		330569	

OPS Oil Pressure Switches **BLS** Brake Light Switches **TT-RF** Temperature Transmitter and Radiator Fan Switches **RLS** Reverse Light Switches **VAR** Various

Vehicle		Date	Engine	kW	OPS	BLS	TT-RF	RLS	VAR
CARENS III			**09/06 -**						
2.0 CVVT	(UN)	09/06-	G4KA	106			330642	330569	
CARNIVAL			**08/99 -**						
2.5 V6	II (GQ)	10/01-	K5	110	330009, 330015, 330567	330701			
	(UP)	08/99-10/01	--	121	330015	330039	330100, 330655		
2.7 V6	III (VQ)	06/06-	G6EA	139	330673		330642		
2.9 CRDi	II (GQ)	10/01-	J3	106	330009, 330567	330701			
2.9 TD	(UP)	08/99-10/01	J3	93	330009, 330015, 330567	330039	330100, 330655		
	II (GQ)	10/01-	J3	93	330009, 330567	330701			
3.5	II (GQ)	07/02-	G6CU	143	330673	330701			
CERATO			**03/04 -**						
1.6	(LD)	07/04-	G4ED	77	330009, 330567			330569	
	Saloon (LD)	04/04-	G4ED	77	330009, 330567			330569	
2.0	(LD)	04/04-	G4GC	105	330009, 330567			330569	
	Saloon (LD)	04/04-	G4GC	105	330009, 330567			330569	
2.0 CRDi	(LD)	04/04-	D4EA	83				330569	
	Saloon (LD)	04/04-	D4EA	83				330569	
CLARUS			**07/96 -**						
1.8 i 16V	(K9A)	07/96-	T8	85	330015	330039	330100, 330583, 330655		
	Estate (GC)	05/98-	T8	85	330015	330039	330100, 330583, 330655		
2.0 i 16V	(K9A)	07/96-	FE (16 V)	98	330015	330039	330100, 330583, 330655		
	Estate (GC)	05/98-	FE (16 V)	98	330015	330039	330100, 330583, 330655		
JOICE			**02/00 -**						
2.0		09/01-	--	88	330009, 330567	330081	330100, 330642, 330667, 330674, 330676	330569	
		02/00-	G4CP	102	330009, 330567	330081	330100, 330642, 330667, 330674, 330676	330569	
K2500			**01/03 -**						
2.5 D	(SD)	01/03-	D4BH	69	330009, 330567	330039			
K2700			**10/99 -**						
2.7 D	(SD)	10/99-	J2	59	330009, 330015, 330567	330039	330100		
MAGENTIS			**05/01 -**						
2.0	(GD)	05/01-	G4JP	100	330009, 330567		330632	330569	
	(MG)	11/05-	G4KA	106			330642	330569	

OPS Oil Pressure Switches **BLS** Brake Light Switches **TT-RF** Temperature Transmitter and Radiator Fan Switches **RLS** Reverse Light Switches **VAR** Various

ERA S.p.A. Moncalieri (TO) Italy - tel: +39 011 6891511 - fax: +39 011 6472862 - www.eranet.it

Vehicle		Date	Engine	kW	OPS	BLS	TT-RF	RLS	VAR
2.5 V6	(GD)	05/01-	G6BV	124	330009, 330567		330632	330569	
2.7	(MG)	11/05-	G6EA	138			330642		
OPIRUS			**09/03 -**						
3.5	(GH)	09/03-	G6CU	149	330673				
3.8 V6	(GH)	10/06-	G6DA	196	330673		330642		
PICANTO			**04/04 -**						
1.0	(BA)	09/05-	G4HE	45	330700	330081			
	(BA)	11/09-	G4HE	46	330700				
1.1	(BA)	04/04-	G4HG	48	330700	330081			
1.1 CRDi	(BA)	11/05-	D3FA	55	330700				
PREGIO			**10/97 -**						
2.5 TCi D	Box (TB)	09/02-	D4BH	69	330009, 330567	330039			
2.7 D	Box (TB)	10/97-	J2	60	330009, 330015, 330567	330039	330100		
PRIDE			**01/90 -**						
1.1 i	(DA)	01/91-	B1	38	330008	330039	330583, 330655		
1.3	Estate	08/99-	--	47	330008	330039	330655		
1.3 16V	(DA)	01/90-	B3	44	330008	330039	330583, 330655		
	(DA)	10/96-	B3	47	330008	330039	330583, 330655		
	(DA)	01/90-	B3	53	330008	330039	330583, 330655		
1.3 i	(DA)	01/90-	--	51	330008	330039	330583, 330655		
RETONA			**06/99 -**						
2.0 16V	(CE)	05/00-	FE (16 V)	94	330015	330039	330100, 330583, 330655		
2.0 TD	(CE)	06/99-	RF	61	330008	330039	330100, 330655		
RIO			**08/00 -**						
1.3	(DC_)	09/00-02/05	--	55	330015	330039	330581, 330635		
	Estate (DC)	08/00-02/05	--	55	330015	330039	330635		
	(DC_)	08/02-02/05	--	60	330015	330039	330635		
	Estate (DC)	08/00-02/05	--	60	330015	330039	330635		
1.4 16V	II (JB)	03/05-	G4EE	71	330009, 330567				
	II Saloon (JB)	03/05-	G4EE	71	330009, 330567				
1.5 16V	Estate (DC)	09/02-02/05	--	71	330015	330039			
	(DC_)	09/00-02/05	--	72	330015	330039	330581		
	Estate (DC)	08/00-02/05	--	72	330015	330039			
1.6 16V	II Saloon (JB)	03/05-	G4ED	82	330009, 330567				
1.6 CVVT	II (JB)	03/05-	G4ED	82	330009, 330567				

OPS Oil Pressure Switches **BLS** Brake Light Switches **TT-RF** Temperature Transmitter and Radiator Fan Switches **RLS** Reverse Light Switches **VAR** Various

Vehicle		Date	Engine	kW	OPS	BLS	TT-RF	RLS	VAR
SEPHIA			**09/93 - 10/97**						
1.5 i	(FA)	02/96-	B5	59	330015	330039	330100, 330583, 330620, 330655		
	Saloon (FA)	02/96-10/97	B5	59	330015	330039	330100, 330620, 330655		
1.6 i	(FA)	01/95-	B6	59		330701	330620, 330655		
	Saloon (FA)	09/93-	B6	59		330701	330620, 330655		
1.8 i 16V	(FA)	01/95-	OK24N	82	330015	330039, 330701	330100, 330583, 330655		
	Saloon (FA)	01/95-	OK24N	82	330015	330039, 330701	330100, 330583, 330655		
SHUMA			**03/96 - 08/04**						
1.5	Saloon (FB)	03/96-12/98	OK280	59	330015	330039	330100, 330583, 330620, 330655		
1.5 i 16V	(FB)	10/97-03/01	--	65	330015	330039	330100, 330583, 330655		
	Saloon (FB)	10/97-10/01	--	65	330015	330039	330100, 330583, 330655		
1.6	(FB)	01/01-12/01	--	75			330635		
	II (FB)	05/01-08/04	GA6D	75	330015	330039	330635		
	II Saloon (FB)	05/01-05/04	GA6D	75	330015	330039	330635		
1.8	II (FB)	04/03-08/04	T8	84	330015	330039	330100, 330583, 330655		
1.8 i 16V	(FB)	10/97-03/01	T8	81	330015	330039	330100, 330583, 330655		
SORENTO			**08/02 -**						
2.4	(JC)	08/02-	G4JS	102	330009, 330567	330701			
2.5 CRDi	(JC)	08/02-	D4CB	103	330009, 330567	330701			
3.3 V6	(JC)	12/06-	--	177	330673				
	(JC)	11/07-	G6DB	182	330673				
3.5 V6	(JC)	08/02-	G6CU	143	330673	330701			
SPORTAGE			**04/94 -**						
2.0	(K00)	10/00-08/03	--	87	330015	330039, 330701	330100, 330583, 330655		
2.0 4WD	(K00)	10/00-08/03	--	87	330015	330039, 330701	330100, 330583, 330655		
2.0 16V 4WD	(JE_)	09/04-	G4GC	104	330009, 330567			330569	
2.0 CRDi	(JE_)	02/05-	D4EA	83				330569	
	(JE_)	01/06-	D4EA-V	103				330569	
2.0 CRDi 4WD	(JE_)	09/04-	D4EA	83				330569	
	(JE_)	01/06-	D4EA-V	103				330569	
2.0 i 16V	(K00)	10/99-08/03	FE (16 V)	94	330015	330039, 330701	330100, 330583, 330655		
	(JE_)	09/04-	G4GC	104	330009, 330567			330569	
2.0 i 16V 4WD	(K00)	04/94-08/03	FE (16 V)	94	330015	330039	330100, 330583, 330655		

OPS Oil Pressure Switches **BLS** Brake Light Switches **TT-RF** Temperature Transmitter and Radiator Fan Switches **RLS** Reverse Light Switches **VAR** Various

ERA S.p.A. Moncalieri (TO) Italy - tel: +39 011 6891511 - fax: +39 011 6472862 - www.eranet.it

Vehicle		Date	Engine	kW	OPS	BLS	TT-RF	RLS	VAR
2.0 i 4WD	(K00)	04/94-08/99	FE	70	330015	330039	330100, 330583, 330655		
2.0 TD 4WD	(K00)	10/97-08/03	RF	61	330008	330039	330100, 330583, 330655		
2.2 D 4x4	(K00)	08/94-04/99	--	52	330015	330039	330100, 330655		
LADA									
NIVA			**12/76 -**						
1600	(2121)	04/80-12/87	BA3 2121	56	330000	330032	330082	330628	
	(2121)	12/76-05/87	BA3 2121	56	330000	330032	330082	330628	
SAMARA			**01/86 -**						
1100	(2108, 2109)	02/88-12/94	BA3 21081	39	330000	330032	330082, 330291	330627	
1300	(2108, 2109)	01/86-12/94	BA3 2108	48	330000	330032	330082, 330291	330627	
1500	(2108, 2109)	01/88-	BA3 21083	53	330000	330032	330082, 330291	330627	
SAMARA FORMA			**09/87 -**						
1300	(21099)	05/90-	--	46				330627	
	(21099)	05/89-07/97	BA3 2108	48				330627	
1500	(21099)	09/91-	BA3 21083	53				330627	
LANCIA									
A 112			**03/78 - 12/86**						
0.9 Junior		03/81-06/86	A112 A.000, A112 A5.000, A112 B2.000	29	330001	330032	330082	330347	
1.0 Abarth		03/78-02/84	A112 A2.000	51		330032	330082	330338	
BETA			**08/73 - 07/82**						
1600	(828_B_)	08/73-07/82	828 B.000	74	330000	330032	330082, 330156		
DEDRA			**01/89 - 07/99**						
1.6	SW (835)	10/94-07/99	159 B9.000	66		330051, 330617	330107, 330228, 330273	330243	
1.6 16V	(835)	01/96-07/99	182 A4.000	76		330051, 330617	330143, 330228, 330273	330243	
	SW (835)	01/96-07/99	182 A4.000	76		330051, 330617	330143, 330228, 330273	330243	
1.6 i.e.	(835)	04/93-07/99	835 C1.000	55		330050, 330051, 330617	330145, 330205, 330273, 330656	330243	
	(835)	08/89-03/93	835 A1.046	57	330000	330050, 330051, 330617	330145, 330205, 330273, 330656	330243	
	(835)	08/89-06/94	835 A1.000	66	330000	330050, 330051, 330617	330145, 330205, 330273	330243	
1.6 LE	(835)	07/94-07/99	159 B9.000	66		330051, 330617	330107, 330228, 330273	330243	
1.8 16V LE	(835)	03/96-07/99	182 A2.000	83		330051, 330617	330121, 330145, 330228, 330273	330243	
	SW (835)	03/96-07/99	182 A2.000	83		330051, 330617	330121, 330145, 330228, 330273	330243	
1.8 GT 16V	(835)	03/96-07/99	183 A1.000	96		330051, 330617	330121, 330145, 330228	330243	

OPS Oil Pressure Switches **BLS** Brake Light Switches **TT-RF** Temperature Transmitter and Radiator Fan Switches **RLS** Reverse Light Switches **VAR** Various

Vehicle		Date	Engine	kW	OPS	BLS	TT-RF	RLS	VAR
1.8 GT 16V	SW (835)	03/96-07/99	183 A1.000	96		330051, 330617	330121, 330145, 330228, 330273	330243	
1.8 i.e.	(835)	08/93-07/99	835 C5.000	66		330051, 330617	330205, 330228, 330273	330243	
	(835)	07/94-07/99	836 A5.000	74		330051, 330617	330228, 330273	330243	
	SW (835)	07/94-07/99	836 A5.000	74		330051, 330617	330228, 330273	330243	
	(835)	09/89-07/99	835 A2.046	77	330000	330051, 330617	330205, 330228, 330273	330243	
	(835)	09/89-06/94	835 A2.000	80	330000	330051, 330617	330205, 330228, 330273	330243	
1.9 TDS	(835)	04/89-07/99	160 D1.000, 835 A4.000, 835 A4.046	66	330000	330051, 330617	330120, 330206, 330290, 330314, 330641	330243	
	SW (835)	07/94-07/99	160 D1.000, 835 A4.000	66		330051, 330617	330120, 330290, 330641	330243	
2.0 Integrale	SW (835)	07/94-07/99	836 A3.000	102		330051, 330617	330228, 330273	330343	
2.0 16V	(835)	07/94-07/99	836 A3.000	102		330051, 330617	330228, 330273	330243	
	SW (835)	07/94-07/99	836 A3.000	102		330051, 330617	330228, 330273	330243	
2.0 HF Integrale	(835)	11/90-07/94	835 A7.046	124		330050, 330051, 330617	330228, 330273	330339	
2.0 i.e.	(835)	09/89-07/99	835 A5.046	83	330000	330051, 330617	330205, 330228, 330273	330243	
	(835)	09/89-07/92	835 A5.000	86	330000	330051, 330617	330205, 330228, 330273	330243	
2.0 i.e. Turbo	(835)	04/91-07/99	835 A8.046	119		330050, 330051, 330617	330228, 330273	330339	
2.0 i.e. Turbo Integrale	(835)	05/90-07/94	835 A7.000	121		330050, 330051, 330617	330228, 330273	330339	
2.0 Turbo	(835)	11/90-06/94	835 A8.000	130	330000	330050, 330051, 330617	330228, 330273	330339	
DELTA			**09/79 -**						
1.1	I (831AB0)	01/86-12/90	831 B8.000	47	330000	330049, 330050	330273, 330314	330243, 330335	
1.3	I (831AB0)	09/79-08/92	831 A2.000, 831 B.000	55	330000	330049, 330050	330273, 330314	330243, 330335	
1.4	III (844)	09/08-	198 A4.000	88		330517			
	III (844)	09/08-	198 A1.000	110		330517			
1.4 16V	III (844)	07/10-	198 A7.000	103		330517			
1.4 i.e.	II (836)	10/94-08/99	160 A1.046, 836 A4.000	51		330050, 330051	330145, 330228, 330656	330243	
1.5	I (831AB0)	09/79-12/92	831 A1.000, 831 B1.000	63	330000	330049, 330050	330273, 330314	330243, 330335	
1.6 D Multijet	III (844)	09/08-	198 A2.000	88		330517			
1.6 GT i.e.	I (831AB0)	05/87-08/92	149 C2.000	66		330048, 330049	330117, 330273, 330275, 330314	330241, 330243	
	I (831AB0)	08/86-08/88	831 B7.000	80		330048, 330049	330117, 330273, 330275, 330314	330241, 330243	
1.6 HF Turbo	I (831AB0)	04/87-03/89	831 B7.046	97	330000	330048, 330049	330275, 330314	330241, 330243	
	I (831AB0)	08/86-08/88	831 B3.000	103	330000	330048, 330049	330275, 330314	330241, 330243	
1.6 i.e.	II (836)	06/93-08/99	835 C1.000	55		330050, 330051	330145, 330228, 330656	330243	
	II (836)	03/96-08/99	182 A6.000	66		330050, 330051	330145, 330228, 330273, 330555	330243	

OPS Oil Pressure Switches **BLS** Brake Light Switches **TT-RF** Temperature Transmitter and Radiator Fan Switches **RLS** Reverse Light Switches **VAR** Various

ERA S.p.A. Moncalieri (TO) Italy - tel: +39 011 6891511 - fax: +39 011 6472862 - www.eranet.it

Vehicle		Date	Engine	kW	OPS	BLS	TT-RF	RLS	VAR
1.6 i.e. 16V	II (836)	01/96-08/99	182 A4.000	76		330051	330143, 330145, 330228, 330273, 330555	330243	
1.8	III (844)	01/09-	939 B1.000	147		330517			
1.8 i.e.	II (836)	07/94-08/99	835 C4.000, 836 A6.000, 836 C4.000	66		330050, 330051	330228, 330273	330243	
	II (836)	06/93-08/99	835 C2.000	76		330050, 330051	330228, 330273	330243	
1.8 i.e. 16V	II (836)	03/96-08/99	182 A2.000	83		330050, 330051	330121, 330145, 330228, 330273	330243	
1.8 i.e. 16V GT	II (836)	03/96-08/99	183 A1.000	96		330050, 330051	330121, 330143, 330145, 330228, 330273	330243	
1.9 D Multijet	III (844)	01/09-	844 A1.000	140		330517			
1.9 TD	II (836)	10/94-08/99	160 D1.000, 835 A4.000	66		330050, 330051	330120, 330290, 330641	330243	
1.9 Turbo DS	I (831AB0)	10/86-12/89	831 D1.000	59	330000	330048, 330049	330206, 330314	330241, 330243	
2.0 16V	II (836)	06/93-08/99	836 A3.000	102		330050, 330051	330228, 330273	330243	
2.0 16V HF Evo Integrale	I (831AB0)	06/93-01/94	831 E5.000, 831 E5.046	155		330048, 330049	330145, 330206	330339	
2.0 16V HF Integrale	I (831AB0)	03/89-09/91	831 D5.000	144	330000	330048, 330049	330145, 330206	330339	
2.0 16V Turbo	II (836)	06/93-08/99	836 A2.000	137		330051	330228, 330273	330343	
	II (836)	07/96-08/99	175 A4.000	142		330051	330228, 330273	330343	
2.0 D Multijet	III (844)	09/08-	198 A8.000	121		330517			
2.0 HF Integrale	I (831AB0)	11/86-08/88	831 B5.000	122	330000	330048, 330049	330273	330339	
	I (831AB0)	12/86-12/92	831 C5.046	130	330000	330048, 330049	330206	330339	
	I (831AB0)	10/87-02/89	831 C5.000	133	330000	330048, 330049	330206	330339	
KAPPA			**08/94 - 10/01**						
2.0 16V Turbo	(838A)	02/95-10/01	838 A4.000	151		330050, 330064	330116	330260, 330343	
	Coupe (838)	11/96-03/01	838 A4.000	151		330051, 330064	330116	330260, 330343	
	SW (838B)	07/96-10/01	838 A4.000	151		330050, 330064	330116	330260, 330343	
2.0 20V	(838A)	10/94-10/01	838 A1.000	107		330050, 330064	330116, 330133	330343	
	(838A)	07/96-10/01	838 A6.000	114		330050, 330051, 330064	330116, 330133, 330143	330260, 330343	
	Coupe (838)	07/96-03/01	838 A6.000	114		330050, 330051, 330064	330121, 330143	330260	
	SW (838B)	07/96-10/01	838 A6.000	114		330050, 330051, 330064	330116, 330133, 330143	330260, 330343	
2.0 20V Turbo	(838A)	06/98-10/01	175 A3.000	162		330064	330121, 330143	330260	
	Coupe (838)	06/98-03/01	175 A3.000	162		330051, 330064	330121, 330143	330260	
	SW (838B)	06/98-10/01	175 A3.000	162		330064	330121, 330143	330260	
2.4 20V	(838A)	08/94-10/01	838 A2.000, 838 A2.027	129		330050, 330064	330116, 330133	330260, 330343	
	Coupe (838)	11/96-03/01	838 A2.000	129		330051, 330064	330116	330260, 330343	
	SW (838B)	07/96-10/01	838 A2.000	129		330050, 330064	330116, 330133	330260, 330343	
2.4 JTD	(838A)	06/98-10/01	838 A8.000	100		330050, 330051, 330064	330137, 330143	330260	
	SW (838B)	06/98-10/01	838 A8.000	100		330050, 330051, 330064	330137, 330143	330260	

OPS Oil Pressure Switches **BLS** Brake Light Switches **TT-RF** Temperature Transmitter and Radiator Fan Switches **RLS** Reverse Light Switches **VAR** Various

Vehicle		Date	Engine	kW	OPS	BLS	TT-RF	RLS	VAR
2.4 T.DS	(838A)	08/94-10/01	838 A3.000, 838 A7.000	91		330050, 330051, 330064	330121	330260, 330343	
	SW (838B)	07/96-10/01	838 A3.000, 838 A7.000	91		330050, 330051, 330064	330121	330260, 330343	
3.0 24V	(838A)	08/94-10/01	838 B.000	150		330050, 330051, 330064	330116, 330143	330260, 330343	
	Coupe (838)	11/96-03/01	838 B.000	150		330050, 330051	330116, 330143		
	SW (838B)	07/96-10/01	838 B.000	150		330050, 330051, 330064	330116, 330143	330260, 330343	
LYBRA			**07/99 -**						
1.6 16V	(839AX)	07/99-	182 A4.000, 182 B6.000	76		330050	330143, 330145, 330495	330243, 330515, 330518	
	SW (839BX)	07/99-	182 A4.000, 182 B6.000	76		330050	330143, 330145, 330495	330243, 330515, 330518	
1.8 16V	(839AX)	07/99-	839 A4.000, 839 A7.000, 839 A9.000	96		330050, 330081, 330517	330143, 330495	330243, 330515, 330518	
	SW (839BX)	07/99-	839 A4.000, 839 A7.000	96		330050	330143, 330495	330243, 330515, 330518	
1.9 JTD	(839AX)	07/99-09/00	AR 32302	77		330050, 330051	330137, 330143	330260	
	SW (839BX)	07/99-09/00	AR 32302	77		330050, 330051	330137, 330143	330260	
	(839AX)	09/00-05/01	AR 37101	81		330050, 330081, 330517	330137, 330495	330260	
	SW (839BX)	09/00-05/01	AR 37101	81		330050, 330081, 330517	330137, 330495	330260	
	(839AX)	05/01-	937 A2.000	85		330081, 330517	330137, 330495	330260	
	SW (839BX)	05/01-	937 A2.000	85		330081, 330517	330137, 330495	330260	
2.0 20V	(839AX)	09/00-	185 A8.000	110		330081, 330517	330495	330243	
	SW (839BX)	09/00-	185 A8.000	110		330081, 330517	330495	330243	
	(839AX)	07/99-09/00	182 B7.000	113		330050, 330051	330143	330243	
	SW (839BX)	07/99-09/00	182 B7.000	113		330050, 330051	330143	330243	
2.4 JTD	(839AX)	07/99-09/00	839 A5.000, AR 32501	99		330050, 330051	330137, 330143	330260	
	SW (839BX)	10/99-09/00	839 A5.000, AR 32501	99		330050, 330051	330137, 330143	330260	
	(839AX)	09/00-05/02	839 A6.000	103		330081, 330517	330137, 330495	330260	
	SW (839BX)	09/00-	839 A6.000	103		330081, 330517	330137, 330495	330260	
	(839AX)	05/02-	841 C.000	110		330081, 330517	330137, 330495	330260	
	SW (839BX)	05/02-	841 C.000	110		330081, 330517	330137, 330495	330260	
MUSA			**10/04 -**						
1.3 D Multijet	(350)	10/04-	188 A9.000	51		330081, 330517	330142	330243	
	(350)	09/06-	199 A3.000	66		330081, 330517	330142	330243	
	(350)	03/09-	199 B1.000	70		330517			
1.4	(350)	09/05-	350 A1.000	57		330081, 330517	330553	330258	
	(350)	10/04-	843 A 1.000	70		330081, 330517	330553	330258	
1.6 D Multijet	(350)	07/08-	350 A2.000	88		330517			
1.9 D Multijet	(350)	10/04-	188 B2.000	74		330081, 330517	330142	330244	

OPS Oil Pressure Switches **BLS** Brake Light Switches **TT-RF** Temperature Transmitter and Radiator Fan Switches **RLS** Reverse Light Switches **VAR** Various

ERA S.p.A. Moncalieri (TO) Italy - tel: +39 011 6891511 - fax: +39 011 6472862 - www.eranet.it

Vehicle		Date	Engine	kW	OPS	BLS	TT-RF	RLS	VAR
PHEDRA			**09/02 -**						
2.0	(179)	09/02-	RFN(EW10J4)	100	330026	330629, 330704, 330713, 330715	330624	330681	
2.0 D Multijet	(179)	07/06-	RHR	100	330026	330629, 330704, 330713, 330715	330502	330513	
2.0 JTD	(179)	07/03-	RHM	79	330026	330629, 330704, 330713	330502, 330624		
	(179)	09/02-	RHW (DW10ATED4)	80	330026	330629, 330704, 330713, 330715	330502, 330624	330513	
	(179)	06/06-	RHK	88	330026	330629, 330704, 330713, 330715	330502	330513	
2.2 D Multijet	(179)	03/08-	4HS	125		330704, 330713, 330715			
2.2 JTD	(179)	09/02-	4HW (DW12ATED4)	94	330026	330629, 330704, 330713, 330715	330502	330513	
3.0 V6	(179)	09/02-	ES9 J4S	150	330026	330629, 330704, 330713	330624		
PRISMA			**01/83 - 02/92**						
1.3	(831AB0)	01/83-02/92	831 A2.000	58	330000	330048, 330049	330273, 330314	330243, 330335	
1.5	(831AB0)	08/86-02/92	831 B1.000	59	330000	330048, 330049	330273, 330314	330243, 330335	
	(831AB0)	01/83-04/86	831 A1.000	63	330000	330032	330082, 330156	330335	
1.6	(831AB0)	08/86-02/92	831 B6.000	73	330000	330048, 330049	330273, 330275, 330314	330241, 330243	
1.6 i.e.	(831AB0)	05/86-12/89	831 B7.000	80	330000	330048, 330049	330275, 330314	330241, 330243	
1.9 Diesel	(831AB0)	01/83-02/92	831 D.000	48	330000	330048, 330049	330206, 330314	330241, 330243	
1.9 Turbo Diesel	(831AB0)	05/85-12/89	831 D1.000	59	330000	330048, 330049	330206, 330314	330241, 330243	
2.0 i.e. 4WD	(831AB0)	04/86-12/89	831 B4.000	85	330000	330048, 330049	330145, 330273, 330275	330339	
THEMA			**11/84 - 07/94**						
2000 16V	(834)	08/92-12/93	834 F1.000	112		330521	330116, 330273	330343	
	SW (834)	05/92-07/94	834 F1.000	112		330521	330116, 330273	330343	
2000 16V Turbo	(834)	12/88-06/90	834 C1.000	133	330000	330521	330116, 330206, 330275	330339	
	(834)	10/92-07/94	834 F2.000	148		330521	330116, 330275	330343	
2000 i.e	(834)	09/88-05/92	834 B1.000	86	330000	330521	330116, 330145, 330206, 330273, 330275	330339	
2000 i.e.	(834)	09/87-05/92	834 B.146	85	330000	330521	330116, 330145, 330206, 330273, 330275	330339	
2000 i.e. 16V	(834)	02/89-05/92	834 B2.246	104	330000	330521	330116, 330206, 330273	330339	
	SW (834)	02/89-05/92	834 B2.246	104	330000	330521	330133, 330206, 330273	330339	
	(834)	05/88-08/92	834 B2.000	108	330000	330521	330116, 330206, 330273	330339	
	SW (834)	05/89-08/92	834 B2.000	108	330000	330521	330133, 330206, 330273	330339	
2000 i.e. 16V Turbo	(834)	04/89-05/92	834 C1.246	130	330000	330521	330116, 330206, 330275	330339	

OPS Oil Pressure Switches **BLS** Brake Light Switches **TT-RF** Temperature Transmitter and Radiator Fan Switches **RLS** Reverse Light Switches **VAR** Various

Vehicle		Date	Engine	kW	OPS	BLS	TT-RF	RLS	VAR
2000 i.e. 16V Turbo	SW (834)	04/89-03/93	834 C1.246	130	330000	330521	330133, 330206, 330275	330339	
	SW (834)	12/88-06/90	834 C1.000	133	330000	330521	330133, 330206, 330275	330339	
2000 i.e.Turbo	(834)	07/86-05/90	834 C.146	110		330521	330116, 330133, 330145, 330206, 330275	330339	
2000 Turbo	SW (834)	01/89-03/92	834 C.146	110		330521	330116, 330133, 330145, 330206, 330275	330339	
2000 Turbo 16V	SW (834)	11/92-07/94	834 F2.000	148		330521	330116, 330275	330343	
2500 Turbo DS	(834)	05/88-07/92	8144. 97S	77	330000	330521	330275	330339	
	SW (834)	05/88-07/92	8144. 97S	77	330000	330521	330275	330339	
	(834)	06/88-05/92	8144.97	85	330000	330521	330275, 330314	330339	
	(834)	05/92-07/94	8144.97 Y	85		330064, 330521	330116, 330120	330343	
	SW (834)	09/92-07/94	8144.97 Y	85		330064, 330521	330116, 330120	330343	
	SW (834)	06/88-05/92	8144.97	85	330000	330521	330275, 330314	330339	
2850 V6 i.e.	(834)	06/88-05/92	834 E.146	108	330685	330521	330133, 330206, 330273	330339	
	(834)	11/84-09/88	834 E.000	110	330685	330521	330206, 330273	330339	
3000 V6	(834)	08/92-07/94	834 F.000	126		330521	330116	330343	
	SW (834)	09/92-07/94	834 F.000	126		330521	330116	330343	
8.32	(834)	10/87-05/92	F 105 L.046	151		330521	330116, 330145, 330275	330339	
	(834)	09/87-05/89	F 105 L	158		330049, 330521	330116, 330145, 330275	330339	
THESIS			**07/02 -**						
2.0 Turbo	(841AX)	07/02-	841 E.000	136		330081, 330517, 330519	330495	330260	
2.4	(841AX)	07/02-	841 D.000	125		330081, 330517, 330519	330495	330260	
2.4 D Multijet	(841AX)	04/06-	841 P.000	136		330081, 330517	330142	330244	
2.4 JTD	(841AX)	07/02-	841 C.000	110		330081, 330517, 330519	330142	330260	
	(841AX)	05/03-	841 G.000	129		330081, 330517, 330519	330142	330244	
3.0 V6	(841AX)	07/02-	841 A.000	158		330081, 330517	330495		
3.2 V6	(841AX)	05/03-	841 L.000	169		330081, 330517	330495		
Y			**11/95 - 09/03**						
1.1	(840A)	11/95-09/03	176 B2.000	40		330064	330120, 330156, 330293, 330295	330258, 330515	
1.2	(840A)	03/96-09/03	188 A4.000, 840 A3.000	44		330064	330120, 330145, 330221, 330293, 330295, 330495	330258, 330515	
1.2 16V	(840A)	10/00-09/03	188 A5.000	59		330064, 330520, 330618	330495	330258	
	(840A)	04/97-09/03	176 B9.000	63		330064	330143, 330145, 330293, 330295	330258, 330515	
1.4 12V	(840A)	03/96-09/03	840 A4.000	55		330064	330116, 330145, 330293, 330295	330258, 330515	

OPS Oil Pressure Switches **BLS** Brake Light Switches **TT-RF** Temperature Transmitter and Radiator Fan Switches **RLS** Reverse Light Switches **VAR** Various

ERA S.p.A. Moncalieri (TO) Italy - tel: +39 011 6891511 - fax: +39 011 6472862 - www.eranet.it

Vehicle		Date	Engine	kW	OPS	BLS	TT-RF	RLS	VAR
1.4 12V	(840A)	10/96-09/03	840 A2.000	59		330064	330116, 330145, 330293, 330295	330258, 330515	
Y10			**03/85 - 12/95**						
1.0 Fire	(156)	06/85-06/91	156 A 2.100	32	330000	330494, 330702	330156, 330273, 330314	330241	
	(156)	10/87-02/92	156 A2.246	33	330000	330494, 330702	330116, 330156, 330273, 330314	330241	
1.0 Fire 4WD	(156)	12/86-02/89	156 A 2.100	32	330000	330494, 330702	330156, 330273, 330314	330241	
	(156)	12/87-02/92	156 A2.246	33	330000	330494, 330702	330116, 330156, 330273, 330314	330241	
	(156)	12/87-02/90	156 A 2.000	37		330702			
1.1 Avenue	(156)	01/95-12/95	176 B2.000	40		330494, 330702	330145, 330228, 330273, 330314	330258	
1.1 Avenue 4WD	(156)	01/95-12/95	176 B2.000	40		330494, 330702	330145, 330228, 330273, 330314	330241	
1.1 i.e	(156)	08/89-06/92	156 C.000	42	330000	330494, 330702	330116, 330156, 330273, 330314	330241	
1.1 i.e 4WD	(156)	08/89-06/92	156 C.000	42	330000	330494, 330702	330116, 330156, 330273, 330314	330241	
1.1 i.e. Fire	(156)	07/89-09/95	156 C.046	37	330000	330494, 330702	330116, 330156, 330273, 330314	330241	
1.1 i.e. Fire 4WD	(156)	09/92-12/95	156 C.046	37		330494, 330702	330145, 330228, 330273, 330314	330241	
1.3 i.e. Fire	(156)	02/89-12/95	146 A 5.046, 156 B.000	53		330494, 330702	330116, 330145, 330228, 330294	330241, 330258	
	(156)	11/87-05/93	156 B.000	56		330494, 330702	330116, 330145, 330294	330241	
YPSILON			**10/03 -**						
1.2	(843)	10/03-	188 A4.000	44		330517	330682, 330693	330258, 330518	
	(843)	10/03-	188 A5.000	59		330081, 330517	330142	330258	
1.3 D Multijet	(843)	09/06-	199 A2.000	55		330081, 330517	330142	330243	
	(843)	09/06-	199 A3.000	66		330081, 330517	330142	330243	
	(843)	05/07-	199 A3.000	77		330517			
1.3 JTD	(843)	10/03-	188 A9.000	51		330081, 330517	330142	330243	
1.4	(843)	02/06-	350 A1.000	57		330081, 330517	330553	330258	
1.4 16V	(843)	10/03-	843 A 1.000	70		330081, 330517	330142, 330553	330258	
ZETA			**05/95 - 09/02**						
2.0 16V	(220)	05/98-07/00	RFV	97	330026	330060, 330074	330109, 330122, 330188, 330588	330249	
	(220)	07/00-09/02	RFN	100	330026	330060, 330074	330624	330681	
2.0 JTD	(220)	09/99-09/02	RHW	80	330026	330060, 330074	330624	330249, 330513	
	(220)	04/00-09/02	RHZ	80	330026	330060, 330074	330624	330249	
2.0 Turbo	(220)	05/95-09/02	RGX	108	330023, 330026	330060, 330074	330271	330249	
2.1 TD	(220)	05/96-09/99	P 8 C	80	330023	330060, 330074	330109, 330134, 330147, 330272, 330588	330249	

OPS Oil Pressure Switches **BLS** Brake Light Switches **TT-RF** Temperature Transmitter and Radiator Fan Switches **RLS** Reverse Light Switches **VAR** Various

Vehicle		Date	Engine	kW	OPS	BLS	TT-RF	RLS	VAR
LAND ROVER									
90/110		**09/83 - 07/90**							
2.5	(DHMC)	09/85-07/90	17H	62	330024		330168, 330172		
2.5 TD	(DHMC)	09/86-07/90	--	63	330024		330168, 330184		
DEFENDER		**09/90 -**							
2.5 90 TDI	Cabrio (LD)	09/90-	11 L	83	330024, 330356		330116, 330184	330464	
2.5 90,110 TDI	Station Wagon (LD)	09/90-12/98	11 L	83	330019		330116	330464	
2.5 Td5 4WD	Cabrio (LD)	06/98-	--	90	330019		330116	330464	
	Pickup (LD_)	06/98-	--	90	330019		330116	330464	
	Station Wagon (LD)	06/98-	--	90	330019		330116	330464	
DISCOVERY		**10/89 - 06/04**							
2.0 16 V	I (LJ, LG)	09/93-10/98	--	99	330019	330041, 330433		330464	
	II (LJ, LT)	06/94-	--	99	330019	330041, 330433		330464	
2.5 Td5	II (LJ, LT)	01/99-06/04	10 P	102	330019		330116	330464	
2.5 TDI	I (LJ, LG)	10/89-10/98	12 L, 21 L	83	330024	330041	330184	330464	
	II (LJ, LT)	10/95-	19 L	90	330024	330041, 330433	330116, 330168, 330184	330464	
3.5	I (LJ, LG)	10/89-06/94	22 D	113		330041, 330433	330168	330464	
3.9 V8	I (LJ, LG)	09/93-10/98	35 D, 36 D	134		330041, 330433	330168	330464	
	II (LJ, LT)	06/94-11/98	35 D, 36 D	134		330041, 330433	330168	330464	
4.0 V8	II (LJ, LT)	11/98-06/04	--	136	330356		330643	330464	
FREELANDER		**02/98 -**							
1.8 16V	(LN)	11/00-	18 K4F	86	330019, 330356	330429	330530, 330643		
1.8 i 16V	(LN)	02/98-11/00	--	88	330019, 330356	330429	330530		
	Soft Top	02/98-	18 K4F	88	330019, 330356	330429	330530, 330643		
2.0 DI	(LN)	02/98-11/00	--	72	330019	330429	330116		
	Soft Top	02/98-	--	72	330019	330429	330116		
2.0 Td4	(LN)	11/01-	--	80	330356		330643		
	(LN)	11/00-	--	82	330356		330643		
2.5 V6	(LN)	11/00-	25 K4F	130	330356		330643		
RANGE ROVER		**07/70 -**							
2.4 Diesel	I (AE, AN, HAA, HAB, HAM, HBM, RE, RN)	04/86-12/90	11 A	78	330024	330041			
2.5 D	II (LP)	08/94-03/02	14 L	83	330024	330041, 330433	330184	330464	
2.5 TD	II (LP)	07/94-03/02	25 6T (BMW)	100	330356		330097, 330121	330249	
2.5 TDi 4x4	I (AE, AN, HAA, HAB, HAM, HBM, RE, RN)	09/91-04/94	14 L	83	330024	330041, 330433		330464	
3.0 TD 6	III (LM)	03/02-	--	130	330356		330683		
3.5	I (AE, AN, HAA, HAB, HAM, HBM, RE, RN)	01/87-09/90	31 D	107		330041	330168	330464	

OPS Oil Pressure Switches **BLS** Brake Light Switches **TT-RF** Temperature Transmitter and Radiator Fan Switches **RLS** Reverse Light Switches **VAR** Various

ERA S.p.A. Moncalieri (TO) Italy - tel: +39 011 6891511 - fax: +39 011 6472862 - www.eranet.it

Vehicle		Date	Engine	kW	OPS	BLS	TT-RF	RLS	VAR
3.5 Vogue	I (AE, AN, HAA, HAB, HAM, HBM, RE, RN)	08/81-09/90	11 D	93		330041	330168	330464	
	I (AE, AN, HAA, HAB, HAM, HBM, RE, RN)	10/85-09/90	24 D, 25 D	120		330041, 330433	330168	330464	
3.9	II (LP)	07/94-03/02	42 D	140	330356			330249	
3.9 CAT	I (AE, AN, HAA, HAB, HAM, HBM, RE, RN)	11/88-07/94	37 D, 38 D	127		330041, 330433	330168	330464	
3.9 Vogue SEI	I (AE, AN, HAA, HAB, HAM, HBM, RE, RN)	11/88-07/94	35 D, 36 D	134		330041, 330433	330168	330464	
4.3 Vogue LSE	I (AE, AN, HAA, HAB, HAM, HBM, RE, RN)	09/92-07/94	40 D	149		330041, 330433	330168	330464	
4.4	III (LM)	03/02-	--	210	330356				
4.6	II (LP)	07/94-03/02	46 D	165	330356			330249	

LEXUS

ES 12/89 - 10/06

250	(F1, F2)	12/89-09/91	2VZ-FE	118	330015		330093, 330130	330743	
3.0	(VZV_)	10/96-07/01	1MZ-FE	140		330703			
300	(F1, F2)	09/91-12/97	3VZ-FE	138	330015, 330022	330703	330100, 330130	330743	

GS 03/93 - 03/05

	(JZS147)	03/93-08/97	2JZ-GE	156	330022	330703	330130		
300 T3	(JZS160)	08/97-10/00	2JZ-GE	163	330022	330703			
430	(JZS160)	11/00-03/05	3UZ-FE	208	330022	330703			

IS 04/99 -

200	I (GXE10)	04/99-	1G-FE	114	330022	330059, 330703			
	SportCross	10/02-	1G-FE	114		330703			
250	II (_XE2_, _SE2_)	10/05-	4GR-FSE	153		330703			
300	I (GXE10)	09/01-	2JZ-GE	157		330703			
	SportCross	10/01-	2JZ-GE	157		330703			

LS 10/89 - 10/00

400	(UCF10)	12/89-12/94	1UZ-FE	180	330015, 330022	330703	330100, 330130		
	(UCF20)	12/94-08/97	1UZ-FE	194	330022	330703	330130		
	(UCF20)	09/97-	1UZ-FE	209	330022	330703			

RX 08/97 -

3.0 2WD	(XU1)	07/00-03/03	1MZ-FE	148		330703			
3.3	(MCU_)	04/03-	3MZ-FE	171		330703			
3.3 FWD	(MCU_)	04/03-01/06	3MZ-FE	171		330703			
300	(MCU_)	05/03-	1MZ-FE	150		330703			
300 V6	(XU1)	10/00-05/03	1MZ-FE	148	330022	330059, 330703			
350	(MCU_)	02/06-	2GR-FE	203		330703			
400h 4WD	(MCU_)	09/04-	3MZ-FE	155		330703			

OPS Oil Pressure Switches **BLS** Brake Light Switches **TT-RF** Temperature Transmitter and Radiator Fan Switches **RLS** Reverse Light Switches **VAR** Various

Vehicle		Date	Engine	kW	OPS	BLS	TT-RF	RLS	VAR
400h FWD	(MCU_)	09/05-	3MZ-FE	155		330703			
MARUTI									
800			**01/86 - 12/06**						
0.8		01/91-	F8B	26	330006		330099		
MAZDA									
121			**03/87 -**						
1.1	II (DB)	11/90-10/93	B1	40	330009, 330567	330039	330192		
	I (DA)	10/87-10/90	B1, B116	42	330008, 330009, 330567	330039	330135, 330176		
1.25	III (JASM, JBSM)	03/96-	DHF, DHG	55	330005		330131, 330144	330263	
1.3	III (JASM, JBSM)	03/96-	JJK	37	330005		330125, 330131, 330144, 330613	330263	
	I (DA)	04/89-10/90	B3	40	330009, 330567	330039	330135, 330176		
	I (DA)	10/87-11/90	B3	44	330008	330039	330135, 330176		
	III (JASM, JBSM)	03/96-	J4R	44	330005		330125, 330131, 330144, 330613	330263	
1.3 16V	II (DB)	11/90-03/96	B3 (16V)	39	330009, 330567	330039	330130, 330192, 330195		
1.3 i 16V	II (DB)	11/90-03/96	B3 (16V)	53	330009, 330567	330039	330130, 330192, 330195		
1.8 D	III (JASM, JBSM)	03/96-	RTJ, RTK	44	330005		330131, 330144	330263	
2			**04/03 -**						
1.25	(DY)	04/03-	FUJA	55		330077, 330549, 330597, 330734	330144	330263	
1.3	(DE)	10/07-	ZJ-VE	55	330009, 330567		330130		
	(DE)	10/07-	ZJ-VE	63	330009, 330567		330130		
1.3 L	(DY)	04/03-	--	67		330077, 330549, 330597, 330734	330144	330263	
1.4	(DY)	04/03-	FXJA	59		330077, 330549, 330597, 330734	330144	330263	
1.4 CD	(DY)	04/03-	F6JA	50	330026	330077, 330549, 330597, 330734	330502	330263	
1.5	(DE)	10/07-	ZY-VE	76	330009, 330567		330130		
	(DY)	04/03-	ZY-VE	82		330077, 330549, 330597, 330734	330144	330263	
1.6	(DY)	04/03-	FYJA	74		330077, 330549, 330597, 330734	330144	330263	
3			**06/00 -**						
1.4	(BK)	02/04-	--	59	330009, 330567		330130		
	(BK)	10/03-	ZJ-VE	62	330009, 330567		330130		
1.6	(BK)	10/03-	B6ZE	77	330009, 330567		330130		
	Saloon (BK)	02/04-	Z6	77	330009, 330567		330130		
1.6 DI Turbo	(BK)	06/04-	Y601	80	330026	330597, 330734	330502	330611	
	Saloon (BK)	06/04-	Y601	80	330026	330597, 330734	330502	330611	
2.0	(BK)	10/03-	LF17	110	330029		330640		

OPS Oil Pressure Switches **BLS** Brake Light Switches **TT-RF** Temperature Transmitter and Radiator Fan Switches **RLS** Reverse Light Switches **VAR** Various

ERA S.p.A. Moncalieri (TO) Italy - tel: +39 011 6891511 - fax: +39 011 6472862 - www.eranet.it

Vehicle		Date	Engine	kW	OPS	BLS	TT-RF	RLS	VAR
2.0	Saloon (BK)	02/04-	LF17	110	330029		330640		
2.0 MZR-CD	(BK)	12/06-	RF7J	105	330029		330640		
	Saloon (BK)	12/06-	RF7J	105	330029		330640		
2.3 DiSi Turbo MPS	(BK)	06/06-	--	184	330029		330640		
2.3 MPS	(BK)	12/06-	L3N9	191	330029		330640		
323			**10/80 - 10/95**						
1.1	III Hatchback (BF)	09/85-10/89	E1	40	330008	330039	330176		
1.3	III (BF)	08/85-05/89	E3	44	330008	330039	330176		
	III Hatchback (BF)	09/85-12/87	E3	44	330008	330039	330176		
	II (BD)	11/80-10/89	E3	50	330008	330039	330176		
	III Station Wagon (BW)	01/86-06/87	--	50	330008	330039	330176		
	III Station Wagon (BW)	01/86-06/87	--	52	330008	330039	330176		
1.3 i	III Hatchback (BF)	09/85-08/89	--	49	330008	330039	330176		
1.5	III (BF)	09/87-10/89	B5	54	330008	330039	330176		
	III Station Wagon (BW)	01/87-05/89	B5, B50, B53	54	330008	330039	330176		
	III (BF)	08/85-05/89	E5	55	330008	330039	330176		
	III Hatchback (BF)	08/85-05/89	E5	55	330008	330039	330176		
	III Station Wagon (BW)	05/86-05/89	B50, B53, E5	55	330008	330039	330176		
1.6	III Station Wagon (BW)	09/86-10/95	B65M, B6E	63	330008	330039	330135, 330176		
1.6 4x4	III Station Wagon (BW)	05/90-03/93	B65M, B6E	63	330009, 330567	330039	330135, 330176		
1.6 GT	III (BF)	11/86-10/89	B6	63	330008	330039	330135, 330176		
	III (BF)	01/86-12/88	B6 (SOHC)	77	330008	330039	330135, 330176		
1.6 GT Turbo	III (BF)	10/85-11/91	B6T	103	330008	330039	330135, 330176		
	III Hatchback (BF)	10/85-11/91	B6T	103	330008	330039	330135, 330176		
1.6 GT Turbo 4WD	III Hatchback (BF)	08/87-10/89	--	110	330008	330039	330135, 330176		
1.6 GT Turbo 4WD	III Hatchback (BF)	10/87-11/91	B6T	103	330008	330039	330135, 330176		
1.7 D	III (BF)	09/86-05/89	PN27	40		330039	330176		
	III Hatchback (BF)	04/86-05/89	PN27	40		330039	330176		
	III Station Wagon (BW)	11/86-08/87	PN26	40	330008	330039	330176		
	III Hatchback (BF)	01/87-05/89	PN46	42	330009, 330567	330039	330192		
	III Station Wagon (BW)	11/86-10/89	PN26, PN54	42	330008	330039	330176		
323 C			**06/89 - 09/98**						
1.3 16V	V (BA)	08/94-09/98	B3 (16V)	54	330009, 330567		330100, 330130		
1.5 16V	V (BA)	08/94-09/98	Z5-DE	65	330009, 330567	330039	330100, 330130		
1.6	IV (BG)	09/89-06/91	B6E	62	330009, 330567	330039	330135, 330192, 330195		
1.6 16V	IV (BG)	03/91-10/94	B6	65	330009, 330567	330039	330135, 330192, 330195		
1.8 16V	V (BA)	08/94-09/98	BP-ZE	84	330009, 330567	330039	330100, 330130		
323 F			**06/89 - 05/04**						
1.4	VI (BJ)	01/01-05/04	B3 (16V)	53	330009, 330567	330039	330130		

OPS Oil Pressure Switches **BLS** Brake Light Switches **TT-RF** Temperature Transmitter and Radiator Fan Switches **RLS** Reverse Light Switches **VAR** Various

Vehicle		Date	Engine	kW	OPS	BLS	TT-RF	RLS	VAR
1.4 16V	VI (BJ)	09/98-01/01	B3 ME	54		330039	330130		
1.5 16V	V (BA)	07/94-09/98	Z5-DE	65	330009, 330567	330039	330100, 330130		
	VI (BJ)	09/98-01/01	--	65	330009, 330567	330039	330130		
1.6	IV (BG)	09/89-06/91	B6E	62	330009, 330567	330039	330135, 330192, 330195		
	VI (BJ)	01/01-05/04	ZM	70	330009, 330567	330039	330130		
	VI (BJ)	01/01-05/04	ZM	72	330009, 330567	330039	330130		
1.6 16V	IV (BG)	03/91-10/94	B6	65	330009, 330567	330039	330135, 330192, 330195		
1.8 16V	IV (BG)	08/89-07/94	BP	76	330009, 330567	330039	330135, 330192, 330195		
	V (BA)	08/94-09/98	BP-ZE	84	330009, 330567	330039	330100, 330130		
1.8 16V GT	IV (BG)	08/89-07/94	BP (DOHC)	94	330009, 330567	330039	330135, 330192, 330195		
1.8 Astina	VI (BJ)	09/98-05/04	BP (DOHC)	92	330009, 330567	330039	330130		
1.9 16V	VI (BJ)	09/98-01/01	--	84	330009, 330567	330039	330130		
2.0	VI (BJ)	01/01-05/04	FS7E, FS7G	96	330009, 330567	330039	330130		
2.0 24V	V (BA)	08/94-09/98	KF	106	330009, 330567	330039	330100, 330130		
2.0 D	VI (BJ)	09/98-05/04	RF1G	52	330009, 330567	330039	330130		
2.0 TD	VI (BJ)	09/98-01/01	--	66	330009, 330567	330039			
	VI (BJ)	01/01-05/04	RF4F	74	330009, 330567	330039	330130		
323 P			**10/96 - 09/98**						
1.3 16V	V (BA)	10/96-	B3 (16V)	54	330009, 330567		330100, 330130		
1.5 16V	V (BA)	10/96-	Z5-DE	65	330009, 330567	330039	330100, 330130		
2.0 D	V (BA)	10/96-	RF1G	52	330008	330039			
323 S			**06/89 - 05/04**						
1.3	IV (BG)	09/89-06/91	B383, B3E	49	330009, 330567	330039	330135, 330192, 330195		
1.3 16V	IV (BG)	04/91-07/94	B3 (16V)	54	330009, 330567	330039	330135, 330192, 330195		
	V (BA)	08/94-09/98	B3 (16V)	54	330009, 330567		330100, 330130		
1.4	VI (BJ)	01/01-05/04	B3 (16V)	53	330009, 330567	330039	330130		
1.4 16V	VI (BJ)	09/98-01/01	B3 ME	54		330039	330130		
1.5 16V	V (BA)	08/94-09/98	Z5-DE	65	330009, 330567	330039	330100, 330130		
	VI (BJ)	09/98-01/01	--	65	330009, 330567	330039	330130		
1.6	IV (BG)	09/89-06/91	B6E	62	330009, 330567	330039	330135, 330192, 330195		
	VI (BJ)	01/01-05/04	ZM	70	330009, 330567	330039	330130		
	VI (BJ)	01/01-05/04	ZM	72	330009, 330567	330039	330130		
1.6 16V	IV (BG)	08/89-10/94	B6	65	330009, 330567	330039	330135, 330192, 330195		
1.6 TD	V (BA)	05/94-09/98	4EE1-T	60			330100, 330130		
1.7 D	IV (BG)	08/89-07/94	PN46, PN54, PN62	41	330009, 330567	330039	330192		
1.8 16V	IV (BG)	08/89-07/94	BP52	76	330009, 330567	330039	330135, 330192, 330195		

OPS Oil Pressure Switches **BLS** Brake Light Switches **TT-RF** Temperature Transmitter and Radiator Fan Switches **RLS** Reverse Light Switches **VAR** Various

ERA S.p.A. Moncalieri (TO) Italy - tel: +39 011 6891511 - fax: +39 011 6472862 - www.eranet.it

Vehicle		Date	Engine	kW	OPS	BLS	TT-RF	RLS	VAR
1.8 16V	V (BA)	08/94-09/98	BP-ZE	84	330009, 330567	330039	330100, 330130		
1.8 16V 4WD	IV (BG)	09/91-07/94	BP52	76	330009, 330567	330039	330135, 330192, 330195		
1.8 16V Turbo 4WD	IV (BG)	01/91-07/94	BP Turbo	120	330009, 330567	330039	330135, 330192, 330589		
1.8 Protege	VI (BJ)	05/98-05/04	BP (DOHC)	92	330009, 330567	330039	330130		
1.9 16V	VI (BJ)	09/98-05/04	--	84	330009, 330567	330039	330130		
2.0	VI (BJ)	01/01-05/04	FS7E, FS7G	96	330009, 330567	330039	330130		
	VI (BJ)	02/00-05/04	FS	98	330009, 330567	330039	330130		
2.0 D	V (BA)	10/96-09/98	RF1G	52	330008	330039			
	VI (BJ)	09/98-05/04	--	52	330009, 330567	330039	330130		
2.0 DiTD	VI (BJ)	10/00-10/02	RF4F	74	330009, 330567	330039	330130		
2.0 TD	VI (BJ)	09/98-05/04	RF3F	66	330009, 330567	330039			
5			**02/05 -**						
1.8	(CR19)	03/05-	L823	85	330029		330640		
2.0	(CR19)	03/05-	LFF7	107	330029		330640		
2.0 CD	(CR19)	03/05-	--	81	330009, 330567		330130		
	(CR19)	06/05-	RF7J	105	330009, 330567		330130		
6			**06/02 -**						
1.8	(GG)	08/02-	L813	88	330029		330640		
	Hatchback (GG)	08/02-	L813	88	330029		330640		
1.8 MZR	(GH)	08/07-	L813	88	330029		330640		
	Hatchback (GH)	08/07-	L813	88	330029		330640		
2.0	(GG)	06/02-	LF17	104	330029		330640		
	Hatchback (GG)	08/02-	LF17, LF18	104	330029		330640		
	Station Wagon (GY)	08/02-	LF17, LF18	104	330029		330640		
	(GG)	03/05-	LFF7	108	330029		330640		
	Hatchback (GG)	03/05-	LFF7	108	330029				
	Station Wagon (GY)	03/05-	LFF7	108	330029				
2.0 CiTD 4x4	Station Wagon (GY)	10/02-02/05	RF5C	89	330009, 330567		330130	330746, 330747	
	Station Wagon (GY)	10/02-02/05	RF5C	100	330009, 330567		330130	330746, 330747	
2.0 DI	(GG)	08/02-	RF5C	89	330009, 330567		330130	330746, 330747	
	Hatchback (GG)	08/02-	RF5C	89	330009, 330567		330130	330746, 330747	
	Station Wagon (GY)	08/02-	RF5C	89	330009, 330567		330130	330746, 330747	
	(GG)	06/02-	RF5C	100	330009, 330567		330130	330746, 330747	
	Hatchback (GG)	08/02-	RF5C	100	330009, 330567		330130	330746, 330747	
	Station Wagon (GY)	08/02-	RF5C	100	330009, 330567		330130	330746, 330747	
	(GG)	06/05-	RF7J	105	330009, 330567		330130		
	Hatchback (GG)	06/05-	RF7J	105	330009, 330567		330130		
	Station Wagon (GY)	06/05-	RF7J	105	330009, 330567		330130		
2.0 MZR	(GH)	08/07-	LF17	108	330029		330640		

OPS Oil Pressure Switches **BLS** Brake Light Switches **TT-RF** Temperature Transmitter and Radiator Fan Switches **RLS** Reverse Light Switches **VAR** Various

Vehicle		Date	Engine	kW	OPS	BLS	TT-RF	RLS	VAR
2.0 MZR	Estate (GH)	02/08-	LF17	108	330029		330640		
	Hatchback (GH)	08/07-	LF17	108	330029		330640		
2.0 MZR-CD	(GH)	08/07-	RF7J	103	330009, 330567		330130		
	Estate (GH)	02/08-	RF7J	103	330009, 330567		330130		
	Hatchback (GH)	08/07-	RF7J	103	330009, 330567		330130		
2.3	(GG)	07/03-02/05	--	118	330029		330640		
	(GG)	03/05-07/07	--	120	330029		330640		
	(GG)	06/02-	L3C1	122	330029		330640		
	Hatchback (GG)	08/02-	L3C1	122	330029		330640		
	Station Wagon (GY)	08/02-	L3C1	122	330029		330640		
2.3 AWD	Station Wagon (GY)	11/02-	L3C1	119	330029		330640		
2.3 MPS Turbo	(GG)	12/05-	L3KG	191	330029		330640		
2.5 MZR	(GH)	08/07-	L5-VE	125	330029		330640		
	Hatchback (GH)	08/07-	L5-VE	125	330029		330640		
626			**11/82 - 10/02**						
1.6	II (GC)	11/82-06/87	F6	59	330006	330039	330176		
	II Hatchback (GC)	03/83-09/87	F6	59	330006	330039	330176		
1.8	III (GD)	11/87-05/92	F8 (12V)	65	330006, 330009, 330567	330039	330176, 330192		
	III Coupe (GD)	09/87-08/91	F8 (12V)	65	330006, 330009, 330567	330039	330176, 330192		
	III Hatchback (GD)	11/87-05/92	F8 (12V)	65	330006, 330009, 330567	330039	330176, 330192		
	III Station Wagon (GV)	01/88-03/92	F8 (12V)	65	330006, 330009, 330567	330039	330176, 330192		
	IV Hatchback (GE)	08/94-04/97	--	66	330009, 330015, 330567	330039	330130		
	V (GF)	05/97-12/99	FPY3	66	330009, 330567	330039	330640		
	V Hatchback (GF)	05/97-12/99	--	66	330009, 330567	330039	330640		
	V Station Wagon (GW)	02/98-01/00	--	66	330009, 330567	330039	330640		
	III Hatchback (GD)	11/87-05/92	--	69	330006, 330009, 330567	330039	330176, 330192		
	V (GF)	12/99-10/02	FP9A	74	330009, 330567	330039	330640		
	V Hatchback (GF)	12/99-10/02	FP	74	330009, 330567	330039	330640		
	V Station Wagon (GW)	01/00-10/02	FP9A	74	330009, 330567	330039	330640		
	IV Hatchback (GE)	08/91-04/97	FP	77	330009, 330015, 330567	330039	330130		
1.8 i	IV (GE)	08/94-04/97	--	66	330009, 330015, 330567	330039	330130		
	IV (GE)	01/92-04/97	FP	77	330009, 330015, 330567	330039	330130		
2.0	III (GD)	09/87-10/90	FE	66	330006	330039	330135, 330176		
	III Coupe (GD)	09/87-10/90	FE	66	330006	330039	330135, 330176		
	III Hatchback (GD)	09/87-10/90	FE	66	330008	330039	330135, 330192		
	III Station Wagon (GV)	10/88-09/97	FE	66	330006, 330009, 330567	330039	330135, 330176, 330192		

OPS Oil Pressure Switches **BLS** Brake Light Switches **TT-RF** Temperature Transmitter and Radiator Fan Switches **RLS** Reverse Light Switches **VAR** Various

ERA S.p.A. Moncalieri (TO) Italy - tel: +39 011 6891511 - fax: +39 011 6472862 - www.eranet.it

Vehicle		Date	Engine	kW	OPS	BLS	TT-RF	RLS	VAR
2.0	II (GC)	11/86-09/87	FE	68	330006	330039	330135, 330176		
	II Hatchback (GC)	01/85-09/87	--	68	330006	330039	330135, 330176		
	II (GC)	03/83-09/87	FE	74	330006	330039	330176		
	II Hatchback (GC)	03/83-09/87	FE	74	330006	330039	330176		
	V (GF)	05/97-10/02	FS	85	330009, 330567	330039	330640		
	V Hatchback (GF)	05/97-10/02	FS	85	330009, 330567	330039	330640		
	V Station Wagon (GW)	02/98-10/02	FS	85	330009, 330567	330039	330640		
	II (GC)	01/86-09/87	FE	88	330006	330039	330135, 330176		
	II Hatchback (GC)	01/86-09/87	FE	88	330006	330039	330135, 330176		
	V (GF)	04/98-10/02	FS2C	100	330009, 330567	330039	330640		
2.0 12V	III (GD)	09/87-05/92	FE (12V)	79	330006	330039	330176		
	III Coupe (GD)	09/87-12/88	FE (12V)	79	330006	330039	330176		
	III Hatchback (GD)	11/87-05/92	FE (12V)	79	330006	330039	330176		
	III Station Wagon (GV)	09/87-01/90	FE (12V)	81	330006	330039			
2.0 16V	III (GD)	11/87-05/92	FE Kat. (16V)	103	330006, 330009, 330567	330039	330135, 330176, 330192		
	III Coupe (GD)	12/87-10/90	FE Kat. (16V)	103	330006, 330009, 330567	330039	330135, 330176, 330192		
	III Hatchback (GD)	11/87-10/90	FE Kat. (16V)	103	330006, 330009, 330567	330039	330135, 330176, 330192		
	III Station Wagon (GV)	01/88-03/92	FE Kat. (16V)	103	330006, 330009, 330567	330039	330135, 330176, 330192		
	III (GD)	07/87-09/89	FE Kat. (16V)	109	330006	330039	330135, 330176		
	III Coupe (GD)	06/87-09/89	FE Kat. (16V)	109	330006	330039	330135, 330176		
	III Hatchback (GD)	06/87-08/89	FE Kat. (16V)	109	330006	330039	330135, 330176		
2.0 D	III (GD)	07/87-07/91	RF-N	44	330008	330039	330176, 330195		
	III Hatchback (GD)	07/87-07/91	RF-N	44	330008	330039	330176, 330195		
	III Station Wagon (GV)	09/88-07/91	RF-N	44	330008	330039	330176, 330195		
	II (GC)	01/83-06/87	RF46	46	330008				
	II Hatchback (GC)	03/84-06/87	RF46	46	330008				
	II (GC)	11/82-07/85	--	47	330008				
	III Station Wagon (GV)	11/94-09/97	RFG5	60	330008	330039			
2.0 D Comprex	III Station Wagon (GV)	05/93-11/96	RF-CX	55	330008	330039			
2.0 D GLX Comprex	IV (GE)	10/92-04/97	RF OHC	55	330008	330039	330130		
	IV Hatchback (GE)	01/93-04/97	RF OHC	55	330008	330039	330130		
2.0 GLX	III Station Wagon (GV)	04/92-02/95	--	86	330009, 330567	330039	330135, 330192		
2.0 H.P.	V Hatchback (GF)	02/98-10/02	FS2C	100	330009, 330567	330039	330640		
	V Station Wagon (GW)	02/98-10/02	FS2C	100	330009, 330567	330039	330640		
2.0 i	IV (GE)	01/92-04/97	FS	85	330009, 330015, 330567	330039	330130		
	IV Hatchback (GE)	08/91-04/97	FS	85	330009, 330015, 330567	330039	330130		
2.0 i 4WD	IV (GE)	04/92-04/97	FS	85	330009, 330015, 330567	330039	330130		

OPS Oil Pressure Switches **BLS** Brake Light Switches **TT-RF** Temperature Transmitter and Radiator Fan Switches **RLS** Reverse Light Switches **VAR** Various

Vehicle		Date	Engine	kW	OPS	BLS	TT-RF	RLS	VAR
2.0 i 4WD	IV Hatchback (GE)	04/92-04/97	FS	85	330009, 330015, 330567	330039	330130		
2.0 Turbo DI	V (GF)	04/98-10/02	--	74	330009, 330567	330039			
	V Station Wagon (GW)	04/98-10/02	RF4F	74	330009, 330567	330039			
2.2 12V	III (GD)	11/87-07/91	F2	85	330006, 330008	330039	330135, 330176, 330192		
	III Coupe (GD)	04/88-12/91	F2	85	330006, 330008	330039	330135, 330176, 330192		
	III Hatchback (GD)	06/88-04/92	F2	85	330006, 330008	330039	330135, 330176, 330192		
	III Station Wagon (GV)	03/89-11/96	F2	85	330006, 330009, 330567	330039	330135, 330176		
2.2 12V 4WD	III Hatchback (GD)	11/87-07/90	F2	85	330006, 330008	330039	330135, 330176, 330192		
	III Station Wagon (GV)	05/91-11/92	F2, F2L1	85	330009, 330567	330039	330135, 330192		
2.5 24V	IV Hatchback (GE)	08/94-04/97	KL	120	330009, 330015, 330567	330039	330130		
	IV Hatchback (GE)	01/92-04/97	KL	121	330015	330039	330130		
929			**05/87 - 06/91**						
2.0	III (HC)	06/87-12/88	FE, FEFA	85	330008	330039	330135, 330176		
2.2 12V	III (HC)	01/88-04/89	F2, F21, F2E	85	330008	330039	330135, 330176		
2.2 i	III (HC)	05/87-12/88	F2-EGI	100	330008	330039	330135, 330176		
3.0	III (HC)	01/88-12/89	JE3	125	330008	330039	330135, 330176		
	III (HC)	06/87-06/91	JE	140	330008	330039	330135, 330176		
3.0 i	III (HC)	01/90-06/91	JE3	123	330008	330039	330135		
B-SERIE			**02/99 - 03/05**						
2.2 4WD	(UN)	02/99-	R5A2	60	330009, 330567	330039			
BT-50			**12/06 -**						
2.5 MRZ-CD 4x4	(CD)	12/06-	WLAA	105	330009, 330567	330039	330100, 330130		
3.0 CDVi	(CD)	12/06-	WEAT	115	330009, 330567	330039			
3.0 CDVi 4x4	(CD)	12/06-	WEAT	115	330009, 330567	330039			
CX-7			**11/06 -**						
2.3 MZR DISI Turbo	(ER)	10/07-	L3-VDT	190	330029		330640		
DEMIO			**10/96 - 12/02**						
1.3 16V	(DW)	08/98-	B3 ME	46	330009, 330567	330039			
1.3 i 16V	(DW)	08/98-04/00	B3 (16V)	53	330009, 330567	330039			
E-SERIE			**01/84 - 07/04**						
E2200 D	Box (SR2)	02/97-08/02	R2	52	330008	330039	330100, 330130		
E2200 D 4WD	Box (SR2)	02/97-05/03	R2	52	330008	330039	330100, 330130		
MPV			**03/95 -**						
2.0	II (LW)	09/99-08/00	FS-DS	90	330009, 330567	330039			
2.0 DI	II (LW)	07/02-	RF5C	100	330009, 330567	330039	330130	330746, 330747	

OPS Oil Pressure Switches **BLS** Brake Light Switches **TT-RF** Temperature Transmitter and Radiator Fan Switches **RLS** Reverse Light Switches **VAR** Various

ERA S.p.A. Moncalieri (TO) Italy - tel: +39 011 6891511 - fax: +39 011 6472862 - www.eranet.it

Vehicle		Date	Engine	kW	OPS	BLS	TT-RF	RLS	VAR
2.3	II (LW)	07/02-	L3	104	330029	330039	330640		
2.5 TD	I (LV)	05/96-09/99	WL-T	85	330009, 330567	330039	330130		
3.0 i V6	I (LV)	05/96-09/99	JE94	109		330039	330130		
	I (LV)	03/95-09/99	JE94	113		330039	330130		
	II (LW)	03/02-	AJ	147	330623	330039			
MX-3			**07/91 - 10/97**						
1.6 i	(EC)	07/91-	B69	65	330009, 330567	330039	330100, 330135, 330192		
	(EC)	01/94-	B6D	79	330009, 330567	330039	330100, 330130		
1.8 i V6	(EC)	01/92-01/94	K819	98	330015	330039	330100, 330130		
MX-5			**09/89 -**						
1.6	I (NA)	01/95-04/98	--	66	330009, 330567	330039	330135, 330192		
	I (NA)	05/90-01/94	B64F	85		330039	330135, 330192, 330195		
1.6 16V	II (NB)	05/98-10/05	B6D	81	330009, 330567	330039			
1.8	III (NC)	03/05-	L828	93	330029		330640		
	I (NA)	02/94-04/98	BPF1	96	330009, 330567	330039	330130		
	I (NA)	09/93-12/97	BPF1	96		330039	330130		
	II (NB)	01/98-07/02	BPD	103	330009, 330567	330039			
	II (NB)	08/02-10/05	--	107	330009, 330567	330039			
1.8 16V	II (NB)	11/00-10/05	BPD	102	330009, 330567	330039			
	II (NB)	05/98-10/05	BP-ZE	103	330009, 330567	330039			
	II (NB)	11/00-10/05	BPD	107	330009, 330567	330039			
2.0	III (NC)	03/05-	LF62	118	330029		330640		
MX-6			**07/91 -**						
	(GE)	02/92-	FS	85	330009, 330015, 330567	330039	330100, 330130		
2.5 24V	(GE)	02/92-	KL	121	330009, 330015, 330567	330039	330100, 330130		
2.5 i 24V	(GE)	08/94-	KL	120	330009, 330015, 330567	330039	330130		
PREMACY			**07/99 -**						
1.8	(CP)	07/99-	FP	74	330009, 330567	330039	330130		
1.9	(CP)	07/99-	FP	84	330009, 330567	330039	330130		
2.0 TD	(CP)	10/99-07/00	RF3F	66	330009, 330567	330039	330130		
RX 7			**11/85 -**						
Turbo	II (FC)	03/89-12/91	RE13B	147		330039	330100		
Wankel	II (FC)	11/85-04/89	RE13B	110		330039	330100, 330135, 330176		
Wankel Twin Turbo	III (FD)	07/92-	RE13B	176			330100, 330130		
RX 8			**10/03 -**						
2.6 Wankel	(SE17)	10/03-	13B-MSP	141	330022		330130		

OPS Oil Pressure Switches **BLS** Brake Light Switches **TT-RF** Temperature Transmitter and Radiator Fan Switches **RLS** Reverse Light Switches **VAR** Various

Vehicle		Date	Engine	kW	OPS	BLS	TT-RF	RLS	VAR
2.6 Wankel	(SE17)	10/03-	13B-MSP	170	330022		330130		
	(SE17)	11/03-	13B-MSP	177	330022		330130		
TRIBUTE			**03/00 -**						
2.0	(EP)	03/00-	YF	91	330028				
2.0 4WD	(EP)	03/00-	YF	91	330028				
2.3 GX	(EP)	12/03-10/04	L3-VE	110	330029			330746	
XEDOS 6			**01/92 -**						
1.6 16V	(CA)	06/94-	B6 (DOHC)	79	330009, 330567	330039	330130		
	(CA)	08/92-05/94	B69	83	330009, 330567	330039	330130		
2.0 V6	(CA)	06/94-	KF1	103	330009, 330015, 330567	330039	330130		
	(CA)	01/92-05/94	KF1	106	330015	330039	330130		
XEDOS 9			**07/93 -**						
2.0 24V	(TA)	08/93-01/00	KF	105	330009, 330015, 330567		330100, 330130		
2.3 24V	(TA)	02/95-01/00	KJ -ZEM	155	330009, 330015, 330567		330100, 330130		
2.5 24V	(TA)	07/93-07/00	KL	123	330009, 330015, 330567		330100, 330130		
2.5 V6	(TA)	07/00-	KL	120	330009, 330567		330130		
MERCEDES-BENZ									
100			**02/88 - 02/96**						
D	Box (631)	02/88-05/92	OM 616.963	53			330104, 330118		
	Bus (631)	02/88-05/92	OM 616.963	53			330104, 330118		
	Flatbed / Chassis (631)	02/88-05/92	OM 616.963	53			330104, 330118		
	Box (631)	12/90-02/96	OM 616.963	55			330104, 330118		
	Bus (631)	12/90-02/96	OM 616, OM 616.963	55			330104, 330118		
	Flatbed / Chassis (631)	12/90-02/96	OM 616.963	55			330104, 330118		
190			**10/82 - 08/93**						
2.0	(W201)	10/82-10/84	M 102.921	66					330421
	(W201)	01/86-05/90	M 102.924	75		330058	330104, 330190, 330334	330246	330421
	(W201)	09/84-05/90	M 102.924	77		330058	330104, 330190, 330334	330246	330421
2.0 E	(W201)	10/88-05/93	M 102.962	87		330053, 330058	330104, 330149, 330190, 330216, 330334	330246	330421
2.3	(W201)	09/87-09/88	M 102.985	97		330058	330104, 330149, 330190, 330216, 330334	330246	330421
2.3 E	(W201)	10/82-09/88	M 102.985	100		330058	330104, 330149, 330190, 330216, 330334	330246	330421
2.6	(W201)	10/82-09/88	M 103.942	118		330058		330246	330421

OPS Oil Pressure Switches **BLS** Brake Light Switches **TT-RF** Temperature Transmitter and Radiator Fan Switches **RLS** Reverse Light Switches **VAR** Various

ERA S.p.A. Moncalieri (TO) Italy - tel: +39 011 6891511 - fax: +39 011 6472862 - www.eranet.it

Vehicle		Date	Engine	kW	OPS	BLS	TT-RF	RLS	VAR
D 2.0	(W201)	08/83-08/89	OM 601.911	53		330058	330118, 330190	330246	330421
	(W201)	08/89-08/93	OM 601.911	55		330058	330118, 330190	330246	330421
D 2.5	(W201)	04/85-08/93	OM 602.911	66			330118	330246	330421
	(W201)	08/89-08/93	OM 602.911	69			330118	330246	330421
E 1.8	(W201)	04/90-08/93	M 102.910	80		330058	330104, 330149, 330216, 330334	330246	330421
E 2.0	(W201)	02/85-12/86	M 102.961, M 102.962	83		330053, 330058	330104, 330149, 330190, 330216, 330334	330246	330421
	(W201)	02/85-12/86	M 102.962	85		330053, 330058	330104, 330149, 330190, 330216, 330334	330246	330421
	(W201)	01/85-08/93	M 102.962	87		330053, 330058	330104, 330149, 330190, 330216, 330334	330246	330421
	(W201)	10/82-06/93	M 102.961, M 102.962	90		330053, 330058	330104, 330149, 330190, 330216, 330334	330246	330421
	(W201)	10/82-06/93	--	93					330421
E 2.3	(W201)	09/86-08/91	M 102.985	97		330058	330104, 330149, 330190, 330216, 330334	330246	330421
	(W201)	10/86-08/93	M 102.985	100		330058	330104, 330149, 330190, 330216, 330334	330246	330421
E 2.3-16	(W201)	09/85-12/87	M 102.983	125		330053, 330058	330104, 330190	330246	330421
	(W201)	09/85-08/88	M 102.983	130		330053, 330058	330104, 330190, 330216	330246	330421
	(W201)	04/84-01/87	M 102.983	136		330053, 330058	330104, 330190, 330216	330246	330421
E 2.5-16	(W201)	03/89-08/93	M 102.991	143		330058	330104, 330190, 330334	330246	330421
	(W201)	09/88-08/93	M 102.990	150		330058	330104	330246	330421
E 2.6	(W201)	09/86-08/93	M 103.942	118		330058		330246	330421
	(W201)	09/86-12/89	M 103.942	122		330058		330246	330421
E Evolution II 2.5	(W201)	05/90-08/93	M 102.992	173		330058	330104, 330216, 330334	330246	330421
Turbo-D 2.5	(W201)	02/88-08/93	OM 602.961	90		330058	330118	330246	330421
	(W201)	02/88-08/93	OM 602.961	93		330058	330118	330246	330421
A-CLASS			**07/97 -**						
A 140	(W168)	07/97-08/04	M 166.940	60		330727, 330739	330647	330504	
	(W168)	01/01-08/04	M 166.960	60		330727, 330739	330647	330504	
A 150	(W169)	09/04-	M 266.920	70		330727, 330737, 330739		330504	
A 160	(W169)	04/09-	M 266.920	70		330727, 330737, 330739			
	(W168)	07/97-08/04	M 166.960	75		330727, 330739	330647	330504	
A 160 CDI	(W168)	07/98-02/01	OM 668.941	44		330727, 330739	330647	330504	
	(W168)	02/01-08/04	OM 668.940	55		330727, 330739	330647	330504	

OPS Oil Pressure Switches **BLS** Brake Light Switches **TT-RF** Temperature Transmitter and Radiator Fan Switches **RLS** Reverse Light Switches **VAR** Various

Vehicle		Date	Engine	kW	OPS	BLS	TT-RF	RLS	VAR
A 160 CDI	(W169)	09/04-	OM 640.942	60		330727, 330737, 330739	330647	330504	
A 170	(W169)	09/04-	M 266.940	85		330727, 330737, 330739		330504	
A 170 CDI	(W168)	07/98-02/01	OM 668.940	66		330727, 330739	330647	330504	
A 170 CDI	(W168)	02/01-08/04	OM 668.942	70		330727, 330739	330647	330504	
A 180	(W169)	04/09-	M 266.940	85		330727, 330737, 330739			
A 180 CDI	(W169)	09/04-	OM 640.940	80		330727, 330737, 330739	330647		
A 190	(W168)	03/99-08/04	M 166.990	92		330727, 330739	330647	330504	
A 200	(W169)	09/04-	M 266.960	100		330727, 330737, 330739		330504	
A 200 CDI	(W169)	09/04-	OM 640.941	103		330727, 330737, 330739	330647		
A 200 TURBO	(W169)	09/05-	M 266.980	142		330727, 330737, 330739			
A 210	(W168)	03/02-08/04	M 166.995	103		330727, 330739	330647	330504	
B-CLASS			**03/05 -**						
B 150	(W245)	03/05-	M 266.920	70		330727, 330737, 330739		330504	
B 160	(W245)	04/09-	M 266.920	70		330727, 330737, 330739			
B 170	(W245)	03/05-	M 266.940	85		330727, 330737, 330739		330504	
B 180	(W245)	04/09-	M 266.940	85		330727, 330737, 330739			
B 180 CDI	(W245)	03/05-	OM 640.940	80		330727, 330737, 330739	330647		
B 200	(W245)	03/05-	M 266.960	100		330727, 330737, 330739		330504	
B 200 CDI	(W245)	03/05-	OM 640.941	103		330727, 330737, 330739	330647		
B 200 TURBO	(W245)	03/05-	M 266.980	142		330727, 330737, 330739			
C-CLASS			**03/93 -**						
C 160 Kompressor	Coupe (CL203)	05/02-06/11	M 271.921	90		330727	330647		
C 180	(W202)	11/94-05/00	M 111.921	89		330058, 330727		330532	
	(W202)	03/93-05/00	M 111.920, M 111.921	90		330058, 330727	330104, 330333	330532	
	(W203)	10/00-05/02	M 111.951	95		330727, 330739			
	Coupe (CL203)	03/01-05/02	M 111.951	95		330727, 330739			
	T-Model (S203)	03/01-05/02	M 111.951	95		330727, 330739			
C 180 CGI	(W204)	01/07-	M 271.820	115		330724, 330727			
C 180 Kompressor	(W203)	05/02-	M 271.946	105		330727	330647		
	Coupe (CL203)	05/02-06/11	M 271.946	105		330727	330647		
	T-Model (S203)	05/02-08/07	M 271.946	105		330727	330647		
	(W204)	01/07-	M 271.952	115		330724, 330727	330647		
	(W204)	01/08-	M 271.910	115		330724, 330727	330647		

OPS Oil Pressure Switches **BLS** Brake Light Switches **TT-RF** Temperature Transmitter and Radiator Fan Switches **RLS** Reverse Light Switches **VAR** Various

ERA S.p.A. Moncalieri (TO) Italy - tel: +39 011 6891511 - fax: +39 011 6472862 - www.eranet.it

Vehicle		Date	Engine	kW	OPS	BLS	TT-RF	RLS	VAR
C 180 Kompressor	T-Model (S204)	08/07-	M 271.952	115		330724, 330727	330647		
	T-Model (S204)	01/08-	M 271.910	115		330724, 330727	330647		
C 180 T	Estate (S202)	06/96-09/00	M 111.920, M 111.921	90		330058, 330727	330104, 330333	330532	
	Estate (S202)	09/00-03/01	M 111.952	95		330058, 330727		330532	
C 200	(W202)	01/94-05/00	M 111.941, M 111.945	100		330058, 330727	330104, 330333	330532	
C 200 CDI	(W202)	03/98-05/00	OM 611.960	75		330058, 330727	330647	330532	
	(W203)	02/01-	OM 646.962	75		330727	330647		
	T-Model (S203)	03/01-08/07	OM 646.962	75		330727	330647		
	(W203)	09/00-	OM 611.962	85		330727, 330739	330647		
	T-Model (S203)	03/01-08/07	OM 611.962	85		330727, 330739	330647		
	(W203)	04/03-	OM 646.962	90		330727	330647		
	Coupe (CL203)	03/03-06/11	OM 646.962	90		330727	330647		
	T-Model (S203)	04/03-08/07	OM 646.962	90		330727	330647		
	(W204)	01/07-	OM 646.812	100		330724, 330727	330647		
	T-Model (S204)	08/07-	OM 646.811	100		330724, 330727	330647		
C 200 CGI	(W204)	01/07-	M 271.820	135		330724, 330727			
C 200 CGI Kompressor	(W203)	07/03-	M 271.942	125		330727	330647		
	Coupe (CL203)	03/03-06/11	M 271.942	125		330727	330647		
	T-Model (S203)	07/03-08/07	M 271.942	125		330727	330647		
C 200 D	(W202)	03/93-05/00	OM 601.913	55		330058, 330727	330333, 330334		
	(W202)	10/96-05/00	OM 604.915	65		330058, 330727			
C 200 Kompressor	(W203)	05/00-05/02	M 111.955	120		330727, 330739			
	(W203)	05/02-	M 271.940	120		330727	330647		
	Coupe (CL203)	03/01-05/02	M 111.955	120		330727, 330739			
	Coupe (CL203)	05/02-06/11	M 271.940	120		330727	330647		
	T-Model (S203)	03/01-05/02	M 111.955	120		330727, 330739			
	T-Model (S203)	05/02-08/07	M 271.940	120		330727	330647		
	(W202)	10/95-05/00	M 111.944	132		330058, 330727		330532	
	(W204)	01/07-	M 271.950	135		330724, 330727	330647		
	T-Model (S204)	08/07-	M 271.820	135		330724, 330727	330647		
	(W202)	11/96-05/00	M 111.944	141		330058, 330727		330532	
C 200 T	Estate (S202)	06/96-03/01	M 111.941, M 111.945	100		330058, 330727	330104, 330333	330532	
C 200 T CDI	Estate (S202)	03/98-03/01	OM 611.960	75		330058, 330727	330647	330532	
C 200 T D	Estate (S202)	10/96-03/01	OM 604.915	65		330058, 330727		330532	
C 200 T Kompressor	Estate (S202)	09/00-03/01	M 111.956	120		330058, 330727		330532	
	Estate (S202)	11/96-03/01	M 111.944	141		330058, 330727		330532	
C 220	(W202)	03/93-05/00	M 111.961	110		330058, 330727	330104, 330333		
C 220 CDI	(W202)	09/97-05/00	OM 611.960	92		330058, 330727	330647	330532	
	(W203)	05/00-	OM 611.962	105		330727, 330739	330647		

OPS Oil Pressure Switches **BLS** Brake Light Switches **TT-RF** Temperature Transmitter and Radiator Fan Switches **RLS** Reverse Light Switches **VAR** Various

Vehicle		Date	Engine	kW	OPS	BLS	TT-RF	RLS	VAR
C 220 CDI	Coupe (CL203)	03/01-06/11	OM 611.962	105		330727, 330739	330647		
	T-Model (S203)	03/01-08/07	OM 611.962	105		330727, 330739	330647		
	(W203)	02/04-	OM 646.963	110		330727	330647		
	Coupe (CL203)	02/04-06/11	OM 646.963	110		330727	330647		
	T-Model (S203)	02/04-08/07	OM 646.963	110		330727	330647		
	(W204)	01/07-	OM 646.811	125		330724, 330727	330647		
	(W204)	12/08-	OM 651.911	125		330724, 330727			
	T-Model (S204)	08/07-	OM 646.811	125		330724, 330727	330647		
	T-Model (S204)	12/08-	OM 651.911	125		330724, 330727			
C 220 D	(W202)	07/96-05/00	OM 604.910	55		330058, 330727	330118, 330333		
	(W202)	08/93-05/00	OM 604.910	70		330058, 330727	330118, 330333		
C 220 T CDI	Estate (S202)	09/97-03/01	OM 611.960	92		330058, 330727	330647	330532	
C 220 T D	Estate (S202)	06/96-03/01	OM 604.910	55		330058, 330727	330118, 330333	330532	
	Estate (S202)	06/96-09/98	OM 604.910	70		330058, 330727	330118, 330333	330532	
C 230	(W202)	06/96-06/97	M 111.974	110		330058, 330727		330532	
	(W203)	01/05-	M 272.920	150		330727			
	Coupe (CL203)	01/05-06/11	M 272.920	150		330727			
	T-Model (S203)	01/05-08/07	M 272.920	150		330727			
	(W204)	01/07-	M 272.921	150		330724, 330727			
	T-Model (S204)	08/07-	M 272.921	150		330724, 330727			
C 230 4-matic	(W204)	07/07-	M 272.911	150		330724, 330727			
C 230 Kompressor	(W203)	02/04-	M 271.948	141		330727	330647		
	Coupe (CL203)	05/02-06/11	M 271.948	141		330727	330647		
	T-Model (S203)	02/04-08/07	M 271.948	141		330727	330647		
	(W202)	10/95-05/00	M 111.975	142		330058, 330727		330532	
	Coupe (CL203)	03/01-05/02	M 111.981	145		330727, 330739			
C 230 T	Estate (S202)	06/96-06/98	M 111.974	110		330058, 330727		330532	
C 230 T Kompressor	Estate (S202)	06/97-09/00	M 111.975	142		330058, 330727		330532	
C 240	(W202)	06/97-05/00	M 112.910	125		330058, 330727	330647	330532	
	(W203)	05/00-	M 112.912	125		330727, 330739	330647		
	T-Model (S203)	03/01-08/07	M 112.912	125		330727, 330739	330647		
C 240 4-matic	(W203)	07/02-	M 112.916	125		330727	330647		
	T-Model (S203)	07/02-08/07	M 112.916	125		330727	330647		
C 240 T	Estate (S202)	06/97-09/00	M 112.910	125		330058, 330727	330647	330532	
	Estate (S202)	09/00-03/01	M 112.915	125		330058, 330727	330647	330532	
C 250 CDI	(W204)	08/08-	OM 651.911	150		330724, 330727			
C 250 CGI	(W204)	07/09-	M 271.860	150		330724, 330727			
C 250 D	(W202)	05/93-05/00	OM 605.910	83		330058, 330727	330118, 330333		
C 250 T Turbo-D	Estate (S202)	06/96-03/01	OM 605.960	110		330058, 330727	330118	330532	
C 250 Turbo-D	(W202)	10/95-05/00	OM 605.960	110		330058, 330727	330118	330532	
C 270 CDI	(W203)	12/00-	OM 612.962	125		330727, 330739	330647		

OPS Oil Pressure Switches **BLS** Brake Light Switches **TT-RF** Temperature Transmitter and Radiator Fan Switches **RLS** Reverse Light Switches **VAR** Various

ERA S.p.A. Moncalieri (TO) Italy - tel: +39 011 6891511 - fax: +39 011 6472862 - www.eranet.it

Vehicle		Date	Engine	kW	OPS	BLS	TT-RF	RLS	VAR
C 270 CDI	T-Model (S203)	03/01-08/07	OM 612.962	125		330727, 330739	330647		
C 280	(W202)	05/93-05/00	M 104.941	142		330058, 330727	330104, 330333		
	(W202)	06/97-05/00	M 112.920	145		330058, 330727	330647	330532	
	(W203)	01/05-	M 272.940	170		330727			
	T-Model (S203)	01/05-08/07	M 272.940	170		330727			
	(W204)	01/07-	M 272.947	170		330724, 330727			
	T-Model (S204)	08/07-	M 272.947	170		330724, 330727			
C 280 4-matic	(W203)	01/05-	M 272.941	170		330727			
	T-Model (S203)	01/05-08/07	M 272.941	170		330727			
	(W204)	07/07-	M 272.948	170		330724, 330727			
C 280 T	Estate (S202)	06/97-03/01	M 112.920	145		330058, 330727	330647	330532	
C 30 CDI AMG	(W203)	01/03-	OM 612.990	170		330727	330647		
	Coupe (CL203)	09/02-06/11	OM 612.990	170		330727	330647		
	T-Model (S203)	01/03-08/07	OM 612.990	170		330727	330647		
C 300	(W204)	07/09-	M 272.947	170		330724, 330727			
C 300 4-matic	(W204)	07/07-	M 272.948	170		330724, 330727			
C 32 AMG Kompressor	(W203)	02/01-	M 112.961	260		330727, 330739	330647		
	T-Model (S203)	03/01-08/07	M 112.961	260		330727, 330739	330647		
C 320	(W203)	05/00-	M 112.946	160		330727, 330739	330647		
	Coupe (CL203)	09/02-06/11	M 112.946	160		330727, 330739	330647		
	T-Model (S203)	03/01-08/07	M 112.946	160		330727, 330739	330647		
C 320 4-matic	(W203)	07/02-	M 112.953	160		330727	330647		
	T-Model (S203)	07/02-08/07	M 112.953	160		330727	330647		
C 320 CDI	(W203)	01/05-	OM 642.910	165		330727			
	T-Model (S203)	06/05-08/07	OM 642.910	165		330727			
	(W204)	01/07-	OM 642.960	165		330724, 330727			
	T-Model (S204)	08/07-	OM 642.960	165		330724, 330727			
C 320 CDI 4-matic	(W204)	07/07-	OM 642.961	165		330724, 330727			
	T-Model (S204)	08/07-	OM 642.961	165		330724, 330727			
C 350	(W203)	01/05-	M 272.960	200		330727			
	Coupe (CL203)	01/05-06/11	M 272.960	200		330727			
	T-Model (S203)	01/05-08/07	M 272.960	200		330727			
	(W204)	01/07-	M 272.961	200		330724, 330727			
	T-Model (S204)	08/07-	M 272.961	200		330724, 330727			
C 350 4-matic	(W203)	01/05-	M 272.970	200		330727			
	T-Model (S203)	01/05-08/07	M 272.970	200		330727			
	(W204)	07/07-	M 272.971	200		330724, 330727			
C 350 CDI	(W204)	07/09-	OM 642.960	165		330724, 330727			
	(W204)	10/09-	OM 642.830	170		330724, 330727			
	T-Model (S204)	10/09-	OM 642.830	170		330724, 330727			
C 350 CDI 4-matic	(W204)	07/09-	OM 642.961	165		330724, 330727			

OPS Oil Pressure Switches **BLS** Brake Light Switches **TT-RF** Temperature Transmitter and Radiator Fan Switches **RLS** Reverse Light Switches **VAR** Various

Vehicle		Date	Engine	kW	OPS	BLS	TT-RF	RLS	VAR
C 350 CDI 4-matic	(W204)	10/09-	OM 642.832	170		330724, 330727			
	T-Model (S204)	10/09-	OM 642.832	170		330724, 330727			
C 350 CGI	(W204)	09/08-	M 272.982	215		330724, 330727			
C 36 AMG	(W202)	05/94-05/00	M 104.941 (AMG 3.6)	206		330058, 330727	330104, 330333		
C 43 AMG	(W202)	08/97-05/00	M 113.944	225		330058, 330727	330647	330532	
	Estate (S202)	08/97-03/01	M 113.944	225		330058, 330727	330647	330532	
C 55 AMG	(W203)	02/04-	M 113.988	270		330727	330647		
	T-Model (S203)	02/04-08/07	M 113.988	270		330727	330647		
C 63 AMG	(W204)	02/08-	M 156.985	336		330724, 330727			
	T-Model (S204)	02/08-	M 156.985	336		330724, 330727			
CABRIOLET			**09/91 - 06/93**						
300 CE-24	(A124)	04/92-06/93	M 104.980	162		330058	330104, 330333, 330334	330246	330421
CLC-CLASS			**05/08 -**						
CLC 160	(CL203)	02/09-	M 271.911	95		330727	330647		
CLC 180 Kompressor	(CL203)	05/08-	M 271.946	105		330727	330647		
CLC 200 CDI	(CL203)	05/08-	OM 646.962	90		330727	330647		
CLC 200 Kompressor	(CL203)	05/08-	M 271.955	135		330727	330647		
CLC 220 CDI	(CL203)	05/08-	OM 646.963	110		330727	330647		
CLC 230	(CL203)	05/08-	M 272.920	150		330727			
CLC 350	(CL203)	05/08-	M 272.960	200		330727			
CLK			**06/97 -**						
200	(C208)	06/97-06/02	M 111.941, M 111.945	100		330058, 330727		330532	
	Convertible (A208)	03/98-03/02	M 111.941, M 111.945	100		330058, 330727		330532	
200 CGI	(C209)	07/03-	M 271.942	125		330727	330647		
	Convertible (A209)	07/03-	M 271.942	125		330727	330647		
200 Kompressor	(C208)	06/00-06/02	M 111.956	120		330727		330532	
	(C209)	09/02-	M 271.940	120		330727	330647		
	Convertible (A208)	06/00-03/02	M 111.956	120		330727		330532	
	Convertible (A209)	02/03-	M 271.940	120		330727	330647		
	(C209)	10/06-	M 271.955	135		330727	330647		
	Convertible (A209)	10/06-	M 271.955	135		330727	330647		
	(C208)	06/97-06/00	M 111.944	141		330058, 330727		330532	
	Convertible (A208)	03/98-06/00	M 111.944	141		330058, 330727		330532	
220 CDI	(C209)	01/05-	OM 646.966	110		330727	330647		
230 Kompressor	(C208)	06/97-06/00	M 111.973, M 111.975	142		330058, 330727		330532	
	Convertible (A208)	03/98-06/00	M 111.973, M 111.975	142		330058, 330727		330532	
	(C208)	06/00-06/02	M 111.982	145		330727		330532	
	Convertible (A208)	06/00-03/02	M 111.982	145		330727		330532	

OPS Oil Pressure Switches **BLS** Brake Light Switches **TT-RF** Temperature Transmitter and Radiator Fan Switches **RLS** Reverse Light Switches **VAR** Various

ERA S.p.A. Moncalieri (TO) Italy - tel: +39 011 6891511 - fax: +39 011 6472862 - www.eranet.it

Vehicle		Date	Engine	kW	OPS	BLS	TT-RF	RLS	VAR
240	(C209)	06/02-	M 112.912	125		330727	330647		
	Convertible (A209)	02/03-	M 112.912	125		330727	330647		
270 CDI	(C209)	10/02-	OM 612.962, OM 612.967	125		330727	330647		
280	(C209)	01/05-	M 272.940	170		330727			
	Convertible (A209)	01/05-	M 272.940	170		330727			
320	(C208)	06/97-06/02	M 112.940	160		330058	330647	330532	
	(C209)	06/02-	M 112.955	160			330647		
	Convertible (A208)	03/98-03/02	M 112.940	160		330058	330647	330532	
	Convertible (A209)	02/03-	M 112.955	160			330647		
320 CDI	(C209)	01/05-	OM 642.910	165		330727			
	Convertible (A209)	03/05-	OM 642.910	165		330727			
350	(C209)	01/05-	M 272.960	200		330727			
	Convertible (A209)	01/05-	M 272.960	200		330727			
430	(C208)	07/98-06/02	M 113.943	205		330058	330647	330532	
	Convertible (A208)	09/98-03/02	M 113.943	205		330058	330647	330532	
500	(C209)	06/02-	M 113.968	225			330647		
	Convertible (A209)	02/03-	M 113.968	225			330647		
55 AMG	(C208)	08/99-06/02	M 113.981, M 113.984	255			330647	330532	
	Convertible (A208)	01/00-03/02	M 113.981, M 113.984	255			330647		
	(C209)	09/02-	M 113.987	270			330647		
	Convertible (A209)	02/03-	M 113.987	270			330647		
CLS			**10/04 - 12/10**						
280	(C219)	07/08-12/10	M 272.943	170		330737			
300	(C219)	04/09-12/10	M 272.943	170		330737			
320 CDI	(C219)	01/05-12/10	OM 642.910	165		330737			
350	(C219)	10/04-12/10	M 272.964	200		330737			
	(C219)	04/06-12/10	M 272.985	215		330737			
350 CDI	(C219)	04/09-12/10	OM 642.920	165		330737			
350 CGI	(C219)	04/09-12/10	M 272.985	215		330737			
500	(C219)	10/04-12/10	M 113.967	225		330737	330647		
	(C219)	04/06-12/10	M 273.960	285		330737			
CLS 55 AMG	(C219)	01/05-12/10	M 113.990	350		330737	330647		
CLS 63 AMG	(C219)	04/06-12/10	M 156.983	378		330737			
COUPE			**03/77 - 05/93**						
220 CE	(C124)	10/92-05/93	M 111.960	110		330058	330104, 330333	330246	330421
230 C	(C123)	05/77-04/80	M 115.954	80					330421
230 CE	(C124)	06/89-12/92	M 102.982	97		330058	330104, 330149, 330190, 330216, 330333, 330334	330246	330421

OPS Oil Pressure Switches **BLS** Brake Light Switches **TT-RF** Temperature Transmitter and Radiator Fan Switches **RLS** Reverse Light Switches **VAR** Various

Vehicle		Date	Engine	kW	OPS	BLS	TT-RF	RLS	VAR
230 CE	(C124)	03/87-12/92	M 102.982	97		330058	330104, 330149, 330190, 330216, 330333, 330334	330246	330421
	(C123)	04/80-12/85	M 102.980	100					330421
	(C124)	03/87-12/92	M 102.982	100		330058	330104, 330149, 330190, 330216, 330333, 330334	330246	330421
280 C	(C123)	03/77-03/80	M 110.923	115					330421
280 CE	(C123)	09/77-08/79	M 110.988	130					330421
	(C123)	03/77-11/85	M 110.988	136					330421
300 CE	(C124)	03/87-05/93	M 103.983	132		330058	330104, 330333, 330334	330246	330421
	(C124)	03/87-12/89	M 103.983	138		330058	330104, 330333	330246	330421
300 CE-24	(C124)	09/89-12/92	M 104.980	162		330058	330104, 330333, 330334	330246	330421
320 CE	(C124)	10/92-05/93	M 104.992	162		330058	330104, 330333	330246	330421
E-CLASS			**05/93 -**						
3.5 4-matic	(W211)	08/04-08/06	M 272.972	205		330737			
	T-Model (S211)	08/04-08/06	M 272.972	205		330737			
300 TD T	Estate (S124)	06/92-05/93	--	100					330421
350 CGI	T-Model (S211)	05/06-07/09	M 272.985	215		330737			
E 200	(W124)	06/93-06/95	M 111.940	100		330058	330104, 330333	330246	330421
	(W210)	06/95-08/00	M 111.942	100		330058, 330727		330532	
	Convertible (A124)	06/93-03/98	M 111.940	100		330058	330104, 330333	330246	330421
	Coupe (C124)	06/93-06/97	M 111.940	100		330058	330104, 330333	330246	330421
E 200 CDI	(W210)	06/98-03/02	OM 611.961	75		330058, 330727	330647	330532	
	(W211)	07/02-12/08	OM 646.951	75		330727, 330737	330647		
	(W210)	07/99-03/02	OM 611.961	85		330058, 330727	330647	330532	
	(W211)	07/02-12/08	OM 646.951	90		330727, 330737	330647		
	(W211)	04/06-12/08	OM 646.820	100		330727, 330737	330647		
	(W212)	01/09-	OM 651.925	100		330724, 330727			
	T-Model (S211)	04/06-07/09	OM 646.821	100		330727, 330737	330647		
	T-Model (S212)	11/09-	OM 651.925	100		330724, 330727			
E 200 CGI	(W212)	08/09-	M 271.860	135		330724, 330727			
	Convertible (A207)	01/10-	M 271.820, M 271.860	135		330724, 330727			
	Coupe (C207)	01/10-	M 271.860	135		330724, 330727			
	T-Model (S212)	11/09-	M 271.860	135		330724, 330727			
E 200 D	(W124)	06/93-06/95	OM 601.912	55		330058	330104, 330118, 330190, 330216, 330333	330246	330421
	(W210)	01/96-03/02	OM 604.917	65		330058, 330727			
E 200 Kompressor	(W210)	08/00-03/02	M 111.957	120		330058, 330727		330532	
	(W211)	11/02-12/08	M 271.941	120		330727, 330737	330647		
	(W211)	04/06-12/08	M 271.956	135		330727, 330737	330647		

OPS Oil Pressure Switches **BLS** Brake Light Switches **TT-RF** Temperature Transmitter and Radiator Fan Switches **RLS** Reverse Light Switches **VAR** Various

ERA S.p.A. Moncalieri (TO) Italy - tel: +39 011 6891511 - fax: +39 011 6472862 - www.eranet.it

Vehicle		Date	Engine	kW	OPS	BLS	TT-RF	RLS	VAR
E 200 Kompressor	T-Model (S211)	04/06-07/09	M 271.956	135		330727, 330737	330647		
	(W210)	06/97-03/02	M 111.947	137		330058, 330727		330532	
E 200 T	Estate (S124)	06/93-06/96	M 111.940	100		330058	330104, 330333	330246	330421
	Estate (S210)	06/96-08/00	M 111.942	100		330058, 330727		330532	
E 200 T Kompressor	Estate (S210)	08/00-03/03	M 111.957	120		330058, 330727		330532	
	T-Model (S211)	03/03-07/09	M 271.941	120		330727, 330737	330647		
	Estate (S210)	06/97-03/03	M 111.947	137		330058, 330727		330532	
E 220	(W124)	06/93-06/95	M 111.960	110		330058	330104, 330333	330246	330421
	Convertible (A124)	06/93-03/98	M 111.960	110		330058	330104, 330333	330246	330421
	Coupe (C124)	06/93-06/97	M 111.960	110		330058	330104, 330333	330246	330421
E 220 CDI	(W210)	06/98-07/99	OM 611.961	92		330058, 330727	330647	330532	
	(W211)	03/02-12/08	OM 646.961	100		330727, 330737	330647		
	T-Model (S211)	03/03-07/09	OM 646.961	100		330727, 330737	330647		
	(W210)	07/99-03/02	OM 611.961	105		330058, 330727	330647	330532	
	(W211)	03/02-12/08	OM 646.961	110		330727, 330737	330647		
	(W211)	04/06-12/08	OM 646.821	125		330727, 330737	330647		
	(W212)	01/09-	OM 651.924	125		330724, 330727			
	Convertible (A207)	01/10-	OM 651.911	125		330724, 330727			
	Coupe (C207)	01/10-	OM 651.911	125		330724, 330727			
	T-Model (S212)	11/09-	OM 651.924	125		330724, 330727			
E 220 D	(W210)	05/96-03/02	OM 604.912	55		330058, 330727	330118		
	(W210)	06/95-07/99	OM 604.912	70		330058, 330727	330118		
E 220 T	Estate (S124)	06/93-06/96	M 111.960	110		330058	330104, 330333	330246	330421
E 220 T CDI	Estate (S210)	06/98-07/99	OM 611.961	92		330058, 330727	330647	330532	
	Estate (S210)	07/99-03/03	OM 611.961	105		330058, 330727	330647	330532	
	T-Model (S211)	03/03-07/09	OM 646.961	110		330727, 330737	330647		
	T-Model (S211)	04/06-07/09	OM 646.821	125		330727, 330737	330647		
E 230	(W210)	06/95-06/97	M 111.970	110		330058			
	(W211)	09/07-12/08	M 272.922	150		330727, 330737			
E 230 T	Estate (S210)	06/96-06/97	M 111.970	110		330058, 330727			
	T-Model (S211)	05/07-07/09	M 272.922	150		330727, 330737			
E 240	(W210)	06/97-08/00	M 112.911	125		330058, 330727	330647	330532	
	(W210)	08/00-03/02	M 112.914	125		330058, 330727	330647	330532	
	(W211)	03/02-12/08	M 112.913, M 112.917	130		330727, 330737	330647		
E 240 4-matic	(W211)	03/03-12/08	M 112.917	130		330737	330647		
E 240 T	Estate (S210)	06/97-03/03	M 112.911	125		330058, 330727	330647	330532	
	Estate (S210)	08/00-03/03	M 112.914	125		330058, 330727	330647	330532	
	T-Model (S211)	03/03-07/09	M 112.913	130		330727, 330737	330647		
E 240 T 4-matic	T-Model (S211)	07/03-07/09	M 112.917	130		330737	330647		
E 250 CDI	(W212)	01/09-	OM 651.924	150		330724, 330727			
	Convertible (A207)	01/10-	OM 651.911	150		330724, 330727			

OPS Oil Pressure Switches **BLS** Brake Light Switches **TT-RF** Temperature Transmitter and Radiator Fan Switches **RLS** Reverse Light Switches **VAR** Various

Vehicle		Date	Engine	kW	OPS	BLS	TT-RF	RLS	VAR
E 250 CDI	Coupe (C207)	01/09-	OM 651.911	150		330724, 330727			
	T-Model (S212)	11/09-	OM 651.924	150		330724, 330727			
E 250 CGI	(W212)	01/09-	M 271.860	150		330724, 330727			
	Convertible (A207)	01/10-	M 271.860	150		330724, 330727			
	Coupe (C207)	01/09-	M 271.860	150		330724, 330727			
	T-Model (S212)	11/09-	M 271.860	150		330724, 330727			
E 250 D	(W124)	07/93-06/95	OM 605.911	83		330058	330333	330246	330421
	(W210)	06/95-07/99	OM 605.912	83		330058, 330727	330118		
E 250 T D	Estate (S124)	06/93-06/96	OM 605.911	83		330058	330333	330246	330421
	Estate (S210)	06/96-07/99	OM 605.912	83		330058, 330727	330118		
E 250 T Turbo-D	Estate (S210)	06/97-07/99	OM 605.962	110		330058, 330727			
E 250 Turbo D	Estate (S124)	06/93-06/96	OM 602.962	93					330421
E 250 Turbo-D	(W124)	06/93-06/95	OM 602.962	93		330058	330104, 330118, 330333	330246	330421
	(W210)	06/97-07/99	OM 605.962	110		330058, 330727			
E 270 CDI	(W210)	07/99-03/02	OM 612.961	125		330058, 330727	330647	330532	
	(W211)	03/02-12/08	OM 647.961	130		330727, 330737	330647		
E 270 T CDI	Estate (S210)	07/99-03/03	OM 612.961	125		330058, 330727	330647	330532	
	T-Model (S211)	03/03-07/09	OM 647.961	130		330727, 330737	330647		
E 280	(W210)	01/96-06/97	M 104.945	142		330058, 330727	330333		
	(W124)	06/93-06/95	M 104.942	145		330058	330104, 330333	330246	330421
	(W210)	12/96-03/02	M 112.921	150		330058, 330727	330647	330532	
	(W211)	03/05-12/08	M 272.943	170		330727, 330737			
E 280 4-matic	(W210)	12/96-03/02	M 112.921	150		330058, 330727	330647	330532	
E 280 CDI	(W211)	05/04-12/08	OM 648.961	130		330737	330647		
	(W211)	03/05-12/08	OM 642.920	140		330727, 330737			
E 280 CDI 4-matic	(W211)	03/05-12/08	OM 642.921	140		330737			
E 280 long	(W124)	06/93-06/95	M 104.942	142		330058	330104, 330333	330246	330421
E 280 T	Estate (S124)	06/93-06/96	M 104.942	142		330058	330104, 330333	330246	330421
	Estate (S124)	06/93-06/96	M 104.942	145		330058	330104, 330333	330246	330421
	Estate (S210)	12/96-03/03	M 112.921	150		330058, 330727	330647	330532	
	T-Model (S211)	03/05-07/09	M 272.943	170		330727, 330737			
E 280 T 4-matic	Estate (S210)	12/96-03/03	M 112.921	150		330058, 330727	330647	330532	
E 280 T CDI	T-Model (S211)	05/04-07/09	OM 648.961	130		330737	330647		
	T-Model (S211)	03/05-07/09	OM 642.920	140		330727, 330737			
E 280 T CDI 4-matic	T-Model (S211)	03/05-07/09	OM 642.921	140		330737			
E 290 T Turbo-D	Estate (S210)	06/96-07/99	OM 602.982	95		330058, 330727			
E 290 Turbo-D	(W210)	03/96-07/99	OM 602.982	95		330058, 330727			
E 300 4-matic	(W124)	06/93-06/95	M 103.985	132		330058	330104, 330333, 330334	330246	330421
E 300 BLUETEC	(W211)	09/07-12/08	OM 642.920	155		330737			
E 300 D	(W124)	07/93-06/95	OM 606.910	100		330058	330333, 330334	330246	330421

OPS Oil Pressure Switches **BLS** Brake Light Switches **TT-RF** Temperature Transmitter and Radiator Fan Switches **RLS** Reverse Light Switches **VAR** Various

ERA S.p.A. Moncalieri (TO) Italy - tel: +39 011 6891511 - fax: +39 011 6472862 - www.eranet.it

Vehicle		Date	Engine	kW	OPS	BLS	TT-RF	RLS	VAR
E 300 D	(W210)	06/95-06/97	OM 606.912	100		330058, 330727	330118		
E 300 T 4-matic	Estate (S124)	06/93-06/96	M 103.985	132		330058	330104, 330333, 330334	330246	330421
E 300 T D	Estate (S124)	06/93-06/96	OM 606.910	100		330058	330333, 330334	330246	330421
E 300 T Turbo-D	Estate (S124)	06/93-06/96	OM 603.960	108		330058	330104, 330333		330421
	Estate (S210)	12/96-07/99	OM 606.962	130		330058			
E 300 T Turbo-D 4-matic	Estate (S124)	06/93-06/96	OM 603.963	108		330058	330104, 330333		330421
E 300 TE-24 AMG	Estate (S124)	06/93-06/96	M 104.980	162					330421
E 300 Turbo-D	(W124)	06/93-06/95	OM 603.960	108		330058	330104, 330333		330421
	(W210)	12/96-07/99	OM 606.962	130		330058			
E 300 Turbo-D 4-matic	(W124)	06/93-06/95	OM 603.963	108		330058	330104, 330333		330421
E 320	(W124)	06/93-06/95	M 104.992	162		330058	330104, 330333	330246	330421
	Convertible (A124)	06/93-03/98	M 104.992, M 104.995	162		330058	330104, 330333	330246	330421
	Coupe (C124)	06/93-06/97	M 104.992	162		330058	330104, 330333	330246	330421
	(W210)	06/97-03/02	M 112.941	165		330058, 330727	330647	330532	
	(W211)	03/02-12/08	M 112.949	165		330737	330647		
E 320 4-matic	(W210)	06/97-03/02	M 112.941	165		330058, 330727	330647	330532	
	(W211)	03/03-12/08	M 112.954	165		330737	330647		
E 320 CDI	(W210)	07/99-03/02	OM 613.961	145		330058, 330727	330647	330532	
	(W211)	11/02-12/08	OM 648.961	150		330737	330647		
	(W211)	03/05-12/08	OM 642.920	165		330737			
E 320 T	Estate (S124)	06/93-06/96	M 104.992	162		330058	330104, 330333	330246	330421
	Estate (S210)	12/96-03/03	M 112.941	165		330058, 330727	330647	330532	
	T-Model (S211)	03/03-07/09	M 112.949	165		330737	330647		
E 320 T 4-matic	Estate (S210)	12/96-03/03	M 112.941	165		330058, 330727	330647	330532	
	T-Model (S211)	07/03-07/09	M 112.954	165		330737	330647		
E 320 T CDI	Estate (S210)	07/99-03/03	OM 613.961	145		330058, 330727	330647	330532	
	T-Model (S211)	03/03-07/09	OM 648.961	150		330737	330647		
	T-Model (S211)	03/05-07/09	OM 642.920	165		330737			
E 350	(W211)	03/05-12/08	M 272.964	200		330727, 330737			
E 350 4-matic	(W211)	03/05-12/08	M 272.964, M 272.972	200		330737			
	(W212)	01/09-	M 272.977	200		330724			
	T-Model (S212)	11/09-	M 272.977	200		330724			
E 350 BlueTEC	(W212)	01/09-	OM 642.850	155		330724, 330727			
	T-Model (S212)	11/09-	OM 642.850	155		330724, 330727			
E 350 CDI	(W212)	01/09-	OM 642.850	170		330724, 330727			
	Convertible (A207)	01/10-	OM 642.836	170		330724			
	Coupe (C207)	01/09-	OM 642.836	170		330724			
	T-Model (S212)	11/09-	OM 642.850	170		330724, 330727			
E 350 CDI 4-matic	(W212)	09/09-	OM 642.856	170		330724			
	T-Model (S212)	11/09-	OM 642.856	170		330724			

OPS Oil Pressure Switches **BLS** Brake Light Switches **TT-RF** Temperature Transmitter and Radiator Fan Switches **RLS** Reverse Light Switches **VAR** Various

Vehicle		Date	Engine	kW	OPS	BLS	TT-RF	RLS	VAR
E 350 CGI	(W211)	09/07-12/08	M 272.985	215		330737			
	(W212)	01/09-	M 272.983	215		330724			
	Convertible (A207)	01/10-	M 272.982, M 272.984	215		330724			
	Coupe (C207)	01/09-	M 272.984	215		330724			
	T-Model (S212)	11/09-	M 272.983	215		330724			
E 350 T 4-matic	T-Model (S211)	03/05-07/09	M 272.964, M 272.972	200		330737			
E 36 AMG	Coupe (C124)	06/93-04/95	M 104.992 (AMG 3.6)	195					330421
	Convertible (A124)	05/94-03/98	M 104.992 (AMG 3.6)	200		330058	330104, 330333	330246	330421
	Coupe (C124)	05/94-06/97	M 104.992 (AMG 3.6)	200		330058	330104, 330333	330246	330421
E 36 T AMG	Estate (S124)	05/94-06/96	M 104.992 (AMG 3.6)	200		330058	330104, 330333	330246	330421
E 400 CDI	(W211)	02/03-12/08	OM 628.961	191		330737	330647		
E 420	(W124)	06/93-06/95	M 119.975	205		330058	330104, 330334		330421
	(W210)	01/96-06/97	M 119.985	205		330058	330104		
E 420 CDI	(W211)	01/06-12/08	OM 629.910	231		330737			
E 420 T	Estate (S210)	06/96-06/97	M 119.985	205		330058	330104		
E 430	(W210)	06/97-03/02	M 113.940	205		330058, 330727	330647	330532	
E 430 4-matic	(W210)	05/99-03/02	M 113.940	205		330058, 330727	330647	330532	
E 430 T	Estate (S210)	06/97-03/03	M 113.940	205		330058, 330727	330647	330532	
E 430 T 4-matic	Estate (S210)	05/99-03/03	M 113.940	205		330058, 330727	330647	330532	
E 50 AMG	(W210)	02/96-08/97	M 119.985 (AMG 5.0)	255		330058	330104		
E 500	(W211)	03/02-12/08	M 113.967	225		330737	330647		
	(W124)	06/93-06/95	M 119.974	235		330058	330104, 330333, 330334		330421
	(W211)	04/06-12/08	M 273.960	285		330737			
	(W212)	01/09-	M 273.971	285		330724			
	Convertible (A207)	01/10-	M 273.966	285		330724			
	Coupe (C207)	01/09-	M 273.966	285		330724			
	T-Model (S212)	11/09-	M 273.971	285		330724			
E 500 4-matic	(W211)	10/03-12/08	M 113.969	225		330737	330647		
	(W211)	04/06-12/08	M 273.962	285		330737			
	(W212)	01/09-	M 273.970	285		330724			
E 500 T	T-Model (S211)	10/03-07/09	M 113.967	225		330737	330647		
	T-Model (S211)	04/06-07/09	M 273.960	285		330737			
E 500 T 4-matic	T-Model (S211)	10/03-07/09	M 113.969	225		330737	330647		
	T-Model (S211)	04/06-07/09	M 273.962	285		330737			
E 55 AMG	(W210)	08/97-03/02	M 113.980	260		330058, 330727	330647	330532	
E 55 AMG Kompressor	(W211)	10/02-12/08	M 113.990	350		330737	330647		
E 55 T AMG	Estate (S210)	08/97-03/03	M 113.980	260		330058, 330727	330647	330532	
E 55 T AMG Kompressor	T-Model (S211)	07/03-07/09	M 113.990	350		330737	330647		
E 60 AMG	(W124)	05/94-06/95	M 119.974 AMG	280		330058	330104, 330333, 330334		330421

OPS Oil Pressure Switches **BLS** Brake Light Switches **TT-RF** Temperature Transmitter and Radiator Fan Switches **RLS** Reverse Light Switches **VAR** Various

ERA S.p.A. Moncalieri (TO) Italy - tel: +39 011 6891511 - fax: +39 011 6472862 - www.eranet.it

Vehicle		Date	Engine	kW	OPS	BLS	TT-RF	RLS	VAR
E 63 AMG	(W211)	03/06-12/08	M 156.983	378		330737			
	T-Model (S211)	03/06-07/09	M 156.983	378		330737			
	(W212)	12/09-	M 156.985	386		330724			
	T-Model (S212)	08/09-	M 156.985	386		330724			
E200 NGT	(W211)	03/04-12/08	M 271.941	120		330727, 330737	330647		
G-CLASS			**03/79 -**						
200 GE	Cabrio (W463)	01/90-07/93	M 102.965	80					330421
230 G	(W460)	03/79-07/93	M 115.973	66		330053	330104		
230 GE	(W460)	05/87-08/92	M 102.979, M 102.987	90		330053	330104		
	(W461)	02/93-	M 102.979	90		330053	330104, 330334		330421
	(W460)	04/82-08/92	M 102.981, M 102.989	92		330053	330104		
	(W461)	06/93-	M 102.996, M 102.997	92		330053	330104, 330149		330421
	(W463)	06/90-06/93	M 102.989	93		330053	330104, 330149, 330334	330246	330421
	Cabrio (W463)	06/90-02/93	M 102.989	93		330053	330104, 330149, 330334	330246	330421
240 GD	(W460)	03/79-08/87	OM 616.936	53		330053	330104, 330118		
250 GD	(W460)	10/87-12/92	OM 602.930	62		330053	330104, 330118	330246	
	(W460)	12/88-08/92	OM 602.930	68		330053	330104, 330118	330246	
	(W461)	02/90-	OM 602.939	68		330053	330104, 330118		
	(W463)	06/90-	OM 602.931	69		330053	330104, 330118	330246	
280 GE	(W460)	08/84-08/89	M 110.994	110		330053	330104		
	(W460)	11/79-08/89	M 110.994	115		330053	330104		
290 GD/G 290 D	(W461)	04/92-	OM 602.942	70		330053	330104, 330118		330421
300 GD	(W460)	12/79-12/91	OM 617.931	65		330053	330104, 330118		
	(W463)	09/89-	OM 603.931	83		330053		330246	
	Cabrio (W463)	12/90-09/97	OM 603.931	83		330053		330246	
300 GE	(W463)	06/90-	M 103.987	125		330053	330104, 330190, 330334	330246	330421
	Cabrio (W463)	09/89-09/97	M 103.987	125		330053	330104, 330190, 330334	330246	330421
	(W463)	06/90-	M 103.987	128		330053	330104, 330190, 330334	330246	
320 GE	Cabrio (W463)	09/94-11/97	M 104.996	155	330012	330058	330104, 330149, 330333		330421
350 G Turbo D	(W463)	09/91-	OM 603.972	100		330053			
350 G Turbo-D	Cabrio (W463)	09/91-09/97	OM 603.972	100		330053			
G 270 CDI	(W463)	10/01-	OM 612.965	115			330647	330532	
G 290 TD	(W461)	07/97-	OM 602.983	88		330058	330104		330421
G 300 TD	(W463)	08/96-	OM 606.964	130	330012	330058			
	Cabrio (W463)	09/96-	OM 606.964	130	330012	330058			330421
G 320	(W463)	09/94-12/97	M 104.996	155	330012	330058	330104, 330149, 330333		330421
	(W463)	07/97-	M 112.945	158		330058	330647		330421

OPS Oil Pressure Switches **BLS** Brake Light Switches **TT-RF** Temperature Transmitter and Radiator Fan Switches **RLS** Reverse Light Switches **VAR** Various

Vehicle		Date	Engine	kW	OPS	BLS	TT-RF	RLS	VAR
G 320	Cabrio (W463)	11/97-	M 112.945	158		330058	330647		330421
G 320 CDI	(W463)	09/06-	OM 642.970	165				330532	
	Cabrio (W463)	09/06-	OM 642.970	165				330532	
G 36 AMG	(W463)	01/95-	--	200	330012	330058	330104, 330149, 330333		330421
G 400 CDI	(W463)	12/00-	OM 628.962	184			330647	330532	
	Cabrio (W463)	12/00-	OM 628.962	184			330647	330532	
G 500	(W463)	04/98-	M 113.962	218		330058	330647	330532	
	Cabrio (W463)	04/98-	M 113.962	218		330058	330647	330532	
G 500 E	(W463)	09/93-	M 117.965	177		330053	330104, 330334	330246	330421
G 55 AMG	(W463)	04/99-	M 113.982	260			330647	330532	
	(W463)	06/04-	M 113.993	350			330647	330532	330421
	(W463)	08/06-	M 113.993	368					330421
GLK-CLASS			**06/08 -**						
220 CDI	(X204)	12/08-	OM 651.916	125		330724, 330727			
220 CDI 4-matic	(X204)	12/08-	OM 651.912	125		330724			
250 CDI 4-matic	(X204)	09/09-	OM 651.912	150		330724			
280 4-matic	(X204)	06/08-06/09	M 272.948	170		330724			
300 4-matic	(X204)	07/09-04/11	M 272.948	170		330724			
320 CDI 4-matic	(X204)	06/08-	OM 642.961	165		330724			
350 4-matic	(X204)	06/08-04/11	M 272.971	200		330724			
350 CDI 4-matic	(X204)	07/09-01/10	OM 642.832	165		330724			
KOMBI			**09/77 - 06/93**						
200 E	Estate (S124)	11/92-05/93	M 102.922	77					330421
200 T	Estate (S123)	11/80-11/85	M 102.939	74					330421
	Estate (S124)	01/86-05/90	M 102.922	77		330058	330104, 330149, 330190, 330216, 330333, 330334	330246	330421
	Estate (S123)	11/80-11/85	M 102.920	80					330421
	Estate (S124)	09/85-08/89	M 102.922	80					330421
200 T D	Estate (S124)	09/85-08/91	OM 601.912	53		330058	330104, 330118, 330190, 330216, 330333	330246	330421
	Estate (S124)	09/88-08/91	OM 601.912	55		330058	330104, 330118, 330190, 330216, 330333	330246	330421
200 TE	Estate (S124)	09/88-08/92	M 102.963	87		330058	330104, 330149, 330190, 330216, 330333, 330334	330246	330421
	Estate (S124)	09/88-12/89	M 102.962	90		330053, 330058	330104, 330149, 330190, 330216, 330334	330246	330421
	Estate (S124)	10/92-06/93	M 111.940	100		330058	330104, 330333	330246	330421
220 TE	Estate (S124)	10/92-05/93	M 111.960	110		330058	330104, 330333	330246	330421
230 T	Estate (S123)	09/77-03/80	M 115.954	80					330421

OPS Oil Pressure Switches **BLS** Brake Light Switches **TT-RF** Temperature Transmitter and Radiator Fan Switches **RLS** Reverse Light Switches **VAR** Various

ERA S.p.A. Moncalieri (TO) Italy - tel: +39 011 6891511 - fax: +39 011 6472862 - www.eranet.it

Vehicle		Date	Engine	kW	OPS	BLS	TT-RF	RLS	VAR
230 TE	Estate (S124)	06/89-08/92	M 102.982	97		330058	330104, 330149, 330190, 330216, 330333, 330334	330246	330421
	Estate (S124)	09/85-08/92	M 102.982	97		330058	330104, 330149, 330190, 330216, 330333, 330334	330246	330421
	Estate (S123)	04/80-11/85	M 102.980	100					330421
	Estate (S124)	09/85-08/92	M 102.982	100		330058	330104, 330149, 330190, 330216, 330333, 330334	330246	330421
240 T D	Estate (S123)	09/77-02/79	OM 616.912	48					330421
	Estate (S123)	03/79-12/85	OM 616.912	53					330421
250 T	Estate (S123)	05/78-10/79	M 123.921	95					330421
	Estate (S123)	05/78-08/82	M 123.921	103					330421
250 T D	Estate (S124)	09/85-06/93	OM 602.912	66		330058	330104, 330118, 330333	330246	330421
	Estate (S124)	01/89-06/93	OM 602.912	69		330058	330104, 330118, 330333	330246	330421
250 TD Turbo	Estate (S124)	06/92-05/93	OM 605.911	83		330058	330333	330246	330421
	Estate (S124)	03/88-07/93	OM 602.962	93		330058	330104, 330118, 330333	330246	330421
260 TE FGST.	Estate (S124)	09/89-08/92	M 103.940	118		330058		330246	330421
	Estate (S124)	09/85-12/89	M 103.940	122					330421
280 TE	Estate (S123)	09/77-11/85	M 110.988	136					330421
	Estate (S124)	10/92-06/93	M 104.942	145		330058	330104, 330333	330246	330421
300 T D	Estate (S123)	09/77-10/85	OM 617.912	59					330421
	Estate (S123)	03/79-11/85	OM 617.912	65					330421
	Estate (S124)	09/86-06/93	OM 603.912	80		330058	330104, 330333	330246	330421
	Estate (S124)	01/89-06/93	OM 603.912	81		330058	330104, 330333	330246	330421
	Estate (S124)	01/89-06/93	OM 603.912	83		330058	330104, 330333	330246	330421
300 T Turbo-D	Estate (S123)	10/80-11/85	OM 617.952	92					330421
	Estate (S124)	09/86-01/89	OM 603.963	105					330421
	Estate (S124)	01/89-06/93	OM 603.960	108		330058	330104, 330333		330421
300 T Turbo-D 4-matic	Estate (S124)	09/86-01/89	OM 603.963	105					330421
	Estate (S124)	01/89-06/93	OM 603.960	108					330421
300 TD T	Estate (S124)	06/92-05/93	OM 603.960	100					330421
300 TE	Estate (S124)	01/86-08/92	M 103.983	132		330058	330104, 330333, 330334	330246	330421
	Estate (S124)	01/86-12/89	M 103.983	138					330421
300 TE 4-matic	Estate (S124)	09/86-06/93	M 103.985	132		330058	330104, 330333, 330334	330246	330421
	Estate (S124)	09/86-12/89	M 103.983	138					330421
300 TE-24	Estate (S124)	09/89-08/92	M 104.980	162		330058	330104, 330333, 330334	330246	330421
320 TE	Estate (S124)	10/92-06/93	M 104.992	162		330058	330104, 330333	330246	330421
M-CLASS		**02/98 -**							
ML 230	(W163)	02/98-06/05	M 111.977	110		330727, 330739		330532	

OPS Oil Pressure Switches **BLS** Brake Light Switches **TT-RF** Temperature Transmitter and Radiator Fan Switches **RLS** Reverse Light Switches **VAR** Various

Vehicle		Date	Engine	kW	OPS	BLS	TT-RF	RLS	VAR
ML 270 CDI	(W163)	12/99-06/05	OM 612.963	120		330727	330647	330532	
ML 320	(W163)	02/98-08/02	M 112.942	160		330739	330647	330532	
ML 350	(W163)	02/03-06/05	M 112.970	173			330647		
	(W163)	08/02-06/05	M 112.970	180			330647		
ML 400 CDI	(W163)	09/01-06/05	OM 628.963	184			330647	330532	
ML 430	(W163)	02/98-06/05	M 113.942	200		330739	330647	330532	
ML 500	(W163)	09/01-06/05	M 113.964, M 113.965	215			330647	330532	
ML 500 4-matic	(W164)	07/05-	M 113.964	225			330647		
ML 55 AMG	(W163)	02/00-06/05	M 113.981	255			330647	330532	
R-CLASS			**01/06 -**						
R 500 4-matic	(W251, V251)	01/06-	M 113.971	225			330647		
S-CLASS			**08/72 -**						
260 SE	(W126)	09/85-06/91	M 103.941	118		330053	330104, 330333, 330334	330246	330421
	(W126)	09/85-06/91	M 103.941	122		330053	330104, 330333, 330334	330246	330421
300 SE 2.8	(W140)	01/93-10/98	M 104.944	145		330058	330104, 330333	330246	
300 SE,SEL	(W126)	01/86-06/91	M 103.981	132		330053	330104, 330333, 330334	330246	330421
	(W126)	09/85-12/89	M 103.981	138					330421
300 SE,SEL/S320	(W140)	03/91-10/98	M 104.990, M 104.994	170		330058	330104, 330333, 330334	330246	
350 SE,SEL	(W116)	03/76-03/80	M 116.985	143					330421
	(W116)	08/72-02/76	M 116.983	147					330421
	(W116)	03/76-03/80	M 116.985	151					330421
380 SE,SEL	(W126)	12/79-08/85	M 116.963	150		330053	330104	330246	330421
	(W126)	12/85-12/86	M 116.961	160					330421
380 SEC	Coupe (C126)	10/81-07/85	M 116.963	150		330053	330104	330246	
400 SE,SEL/S420	(W140)	02/91-10/98	M 119.971	210		330058	330104, 330333, 330334		
420 SE,SEL	(W126)	10/85-06/91	M 116.965	150		330053	330104, 330333, 330334		330421
	(W126)	10/85-12/87	M 116.965	160		330053	330104, 330333, 330334		330421
	(W126)	10/85-06/91	M 116.965	165		330053	330104, 330333, 330334		330421
	(W126)	10/85-12/87	M 116.965	170		330053	330104, 330333, 330334		330421
420 SEC	Coupe (C126)	10/85-06/91	M 116.965	150		330053	330104, 330333, 330334		
	Coupe (C126)	10/85-12/87	M 116.965	160		330053	330104, 330333, 330334		
	Coupe (C126)	10/85-06/91	M 116.965	165		330053	330104, 330333, 330334		
450 SE,SEL	(W116)	12/75-04/80	M 117.985, M 117.986	160					330421
	(W116)	01/73-04/80	M 117.983, M 117.986	165					330421

OPS Oil Pressure Switches **BLS** Brake Light Switches **TT-RF** Temperature Transmitter and Radiator Fan Switches **RLS** Reverse Light Switches **VAR** Various

ERA S.p.A. Moncalieri (TO) Italy - tel: +39 011 6891511 - fax: +39 011 6472862 - www.eranet.it

Vehicle		Date	Engine	kW	OPS	BLS	TT-RF	RLS	VAR
450 SEL 6.9	(W116)	07/75-03/80	M 100.985	210					330421
500 SE,SEL	(W126)	09/85-06/91	M 117.965	164		330053	330104, 330334		330421
	(W126)	12/79-08/85	M 117.961, M 117.963	170			330104		330421
	(W126)	12/79-08/85	M 117.961, M 117.963	177			330104		330421
	(W126)	09/85-06/91	M 117.965	180		330053	330104, 330334		330421
	(W126)	09/87-06/91	M 117.965	185		330053	330104, 330334		330421
	(W126)	09/87-06/91	M 117.965	195		330053	330104, 330334		330421
	(W140)	02/91-10/98	M 119.970	240		330058	330104, 330333, 330334		
500 SE,SEL CAT	(W126)	06/89-06/91	M 117.965	185		330053	330104, 330334		330421
500 SEC	Coupe (C126)	10/85-06/91	M 117.965	164		330053	330104, 330334		
	Coupe (C126)	10/81-08/85	M 117.963	170			330104		
	Coupe (C126)	09/85-06/91	M 117.965	180		330053	330104, 330334		
	Coupe (C126)	08/87-06/91	M 117.965	185		330053	330104, 330334		
	Coupe (C126)	09/85-06/91	M 117.965	195		330053	330104, 330334		
500 SEC CAT	Coupe (C126)	06/89-06/91	M 117.965	185		330053	330104, 330334		
560 SE,SEL	(W126)	10/85-06/91	M 117.968	178		330053	330104, 330333, 330334		330421
	(W126)	10/85-12/87	M 117.968	200		330053	330104, 330333, 330334		330421
	(W126)	08/87-06/91	M 117.968	205		330053	330104, 330333, 330334		330421
	(W126)	10/85-06/91	M 117.968	220		330053	330104, 330333, 330334		330421
560 SEC	Coupe (C126)	10/85-06/91	M 117.968	178		330053	330104, 330333, 330334		
	Coupe (C126)	10/85-12/87	M 117.968	200		330053	330104, 330333, 330334		
	Coupe (C126)	10/85-06/91	M 117.968	205		330053	330104, 330333, 330334		
	Coupe (C126)	10/85-12/89	M 117.968	220		330053	330104, 330333, 330334		
600 SE,SEL	(W140)	04/91-12/92	M 120.980	300		330058	330104, 330333, 330334		
CL 500	Coupe (C215)	03/99-03/06	M 113.960	225			330647		
	Coupe (C216)	06/06-	M 273.961	285		330724			
CL 500 4-matic	Coupe (C216)	02/08-	M 273.968	285		330724			
CL 55 AMG	Coupe (C215)	10/99-03/06	M 113.986	265			330647		
CL 55 AMG Kompressor	Coupe (C215)	06/02-03/06	M 113.991	368			330647		
CL 600	Coupe (C215)	03/99-03/06	M 137.970	270			330647		
	Coupe (C215)	09/02-03/06	M 275.950	368			330647		
	Coupe (C216)	05/06-	M 275.953	380		330724	330647		
CL 63 AMG	Coupe (C216)	10/06-	M 156.984	386		330724			
CL 65 AMG	Coupe (C215)	09/03-03/06	M 275.980	450			330647		
	Coupe (C216)	10/06-	M 275.982	450		330724	330647		
S 280	(W140)	02/93-10/98	M 104.944	142		330058	330104, 330333	330246	

OPS Oil Pressure Switches **BLS** Brake Light Switches **TT-RF** Temperature Transmitter and Radiator Fan Switches **RLS** Reverse Light Switches **VAR** Various

Vehicle		Date	Engine	kW	OPS	BLS	TT-RF	RLS	VAR
S 280	(W220)	10/98-08/05	M 112.922	150			330647	330532	
S 300 Turbo-D	(W140)	05/96-10/98	OM 606.961	130		330058			
S 320	(W220)	10/98-08/05	M 112.944	165			330647	330532	
S 320 CDI	(W220)	08/99-09/02	OM 613.960	145			330190, 330647	330532	
	(W220)	09/02-08/05	OM 648.960	150			330647	330532	
	(W221)	12/05-	OM 642.930	173		330724			
S 320 CDI 4-matic	(W221)	10/06-	OM 642.930	173		330724			
S 350	(W220)	09/02-08/05	M 112.972	180			330647	330532	
	(W221)	10/05-	M 272.965	200		330724			
S 350 4-matic	(W220)	06/03-08/05	M 112.975	180			330647	330532	
	(W221)	02/08-	M 272.965	200		330724			
S 350 Turbo-D	(W140)	01/93-10/98	OM 603.971	110		330058	330333		
S 400 CDI	(W220)	06/00-08/05	OM 628.960	184			330190, 330647	330532	
	(W220)	06/03-08/05	OM 628.960	191			330647		
S 420	(W140)	01/93-10/98	M 119.971	205		330058	330104, 330333, 330334		
S 420 CDI	(W221)	10/06-	OM 629.911	235		330724			
S 430	(W220)	10/98-08/05	M 113.941	205			330190, 330647	330532	
S 430 4-matic	(W220)	09/02-08/05	M 113.948	205			330647	330532	
S 450 4-matic	(W221)	12/05-	M 273.922	250		330724			
S 500	(W220)	10/98-08/05	M 113.960	225			330647	330532	
	(W140)	01/93-10/98	M 119.970	235		330058	330104, 330333, 330334		
	(W221)	10/05-	M 273.961	285		330724			
S 500 4-matic	(W220)	09/02-08/05	M 113.966	225			330647	330532	
S 55 AMG	(W220)	04/99-08/05	M 113.986	265			330190, 330647	330532	
S 55 AMG Kompressor	(W220)	06/02-08/05	M 113.991	368			330190, 330647	330532	
S 600	(W220)	01/00-08/05	M 137.970	270			330647	330532	
	(W140)	01/93-10/98	M 120.980	290		330058	330104, 330333, 330334		
	(W220)	09/02-08/05	M 275.950	368			330190, 330647	330532	
	(W221)	12/05-	M 275.953	380		330724	330647		
S 63 AMG	(W221)	10/06-	M 156.984	386		330724			
S 65 AMG	(W220)	03/04-08/05	M 275.980	450			330647		
	(W221)	12/05-	M 275.982	450		330724	330647		
SEC/CL 420	Coupe (C140)	10/94-02/99	M 119.971	205		330058	330104, 330333, 330334		
SEC/CL 500	Coupe (C140)	10/92-02/99	M 119.970	235		330058	330104, 330333, 330334		
SEC/CL 600	Coupe (C140)	09/92-02/99	M 120.980	290		330058	330104, 330333, 330334		
Saloon			**01/76 - 06/93**						
200	(W123)	02/76-08/80	M 115.938, M 115.939	62					330421
	(W123)	02/76-08/80	M 115.938, M 115.939	69					330421

OPS Oil Pressure Switches **BLS** Brake Light Switches **TT-RF** Temperature Transmitter and Radiator Fan Switches **RLS** Reverse Light Switches **VAR** Various

ERA S.p.A. Moncalieri (TO) Italy - tel: +39 011 6891511 - fax: +39 011 6472862 - www.eranet.it

Vehicle		Date	Engine	kW	OPS	BLS	TT-RF	RLS	VAR
200	(W123)	06/80-11/85	M 102.939	74					330421
	(W124)	01/86-05/90	M 102.922	75		330058	330104, 330149, 330190, 330216, 330333, 330334	330246	330421
	(W124)	01/86-05/90	M 102.922	77		330058	330104, 330149, 330190, 330216, 330333, 330334	330246	330421
	(W123)	06/80-11/85	M 102.920	80					330421
	(W124)	12/85-05/90	M 102.922	80		330058	330104, 330149, 330190, 330216, 330333, 330334	330246	330421
200 D	(W123)	07/76-02/79	OM 615.940	40					330421
	(W123)	03/79-11/85	OM 615.940	44					330421
	(W124)	12/84-08/89	OM 601.912	53		330058	330104, 330118, 330190, 330216, 330333	330246	330421
	(W124)	08/89-06/93	OM 601.912	55		330058	330104, 330118, 330190, 330216, 330333	330246	330421
200 E	(W124)	11/92-05/93	M 102.922	77					330421
	(W124)	09/88-08/92	M 102.963	87		330058	330104, 330149, 330190, 330216, 330333, 330334	330246	330421
	(W124)	09/88-12/89	M 102.963	90					330421
	(W124)	10/92-06/93	M 111.940	100		330058	330104, 330333	330246	330421
220 D	(W123)	01/76-02/79	OM 615.941	44					330421
	(W123)	01/77-03/79	OM 615.941	49					330421
220 E	(W124)	10/92-06/93	M 111.960	110		330058	330104, 330333	330246	330421
230	(W123)	02/76-03/81	M 115.954	80					330421
230 E	(W124)	12/84-03/92	M 102.982	97		330058	330104, 330149, 330190, 330216, 330333, 330334	330246	330421
	(W124)	06/89-06/93	M 102.982	97		330058	330104, 330149, 330190, 330216, 330333, 330334	330246	330421
	(W123)	04/80-12/85	M 102.980	100					330421
	(W124)	01/85-06/93	M 102.982	100		330058	330104, 330149, 330190, 330216, 330333, 330334	330246	330421
240 D	(W123)	02/76-02/79	OM 616.912	48					330421
	(W123)	03/79-11/85	OM 616.912	53					330421
250	(W123)	02/76-10/79	M 123.921	95					330421
	(W123)	10/79-07/85	M 123.921	103					330421
250 D	(W124)	04/85-06/93	OM 602.912	66		330058	330104, 330118, 330333	330246	330421
	(W124)	01/89-06/93	OM 602.912	69		330058	330104, 330118, 330333	330246	330421
250 Turbo-D	(W124)	09/88-06/93	OM 602.962	93		330058	330104, 330118, 330333	330246	330421
260 E	(W124)	09/85-08/92	M 103.940	118		330058	330104, 330333, 330334	330246	330421

OPS Oil Pressure Switches **BLS** Brake Light Switches **TT-RF** Temperature Transmitter and Radiator Fan Switches **RLS** Reverse Light Switches **VAR** Various

Vehicle		Date	Engine	kW	OPS	BLS	TT-RF	RLS	VAR
260 E	(W124)	09/85-12/89	M 103.940	122					330421
260 E 4-matic	(W124)	09/86-08/92	M 103.943	118		330058	330104, 330333, 330334	330246	330421
	(W124)	12/86-12/89	M 103.940	122					330421
280	(W123)	02/76-08/81	M 110.923	115					330421
280 E	(W123)	08/76-08/81	M 110.988	130					330421
	(W123)	02/76-11/85	M 110.984, M 110.988	136					330421
	(W124)	10/92-06/93	M 104.942	145		330058	330104, 330333	330246	330421
300 AMG	(W124)	09/88-06/93	--	265					330421
300 D	(W123)	02/76-07/80	OM 617.912	59					330421
	(W123)	03/79-11/85	OM 617.912	65					330421
	(W124)	12/84-08/89	OM 603.912	80		330058	330104, 330333	330246	330421
	(W124)	06/90-06/93	OM 603.912	81		330058	330104, 330333	330246	330421
	(W124)	08/89-06/93	OM 603.912	83		330058	330104, 330333	330246	330421
300 D 4-matic	(W124)	09/86-08/92	OM 603.913	80		330058	330104, 330333	330246	330421
	(W124)	08/89-06/93	OM 603.913	83		330058	330104, 330333	330246	330421
300 E	(W124)	08/85-08/92	M 103.983	132		330058	330104, 330333, 330334	330246	330421
	(W124)	01/85-12/85	M 103.980	138					330421
	(W124)	06/85-08/92	M 103.983	138					330421
300 E 4-matic	(W124)	09/86-06/93	M 103.985	132		330058	330104, 330333, 330334	330246	330421
	(W124)	09/86-02/92	M 103.983	138		330058	330104, 330333, 330334	330246	330421
300 E-24	(W124)	09/88-08/92	M 104.980	162		330058	330104, 330333, 330334	330246	330421
300 TD SD	(W124)	06/91-05/93	OM 603.971	110					330421
300 Turbo-D	(W124)	09/86-09/88	OM 603.960, OM 603.963	105					330421
	(W124)	09/88-06/93	OM 603.960	108		330058	330104, 330333		330421
300 Turbo-D 4-matic	(W124)	09/86-09/88	OM 603.960, OM 603.963	105					330421
	(W124)	01/88-06/93	OM 603.963	108		330058	330104, 330333		330421
320 E	(W124)	10/92-06/93	M 104.992	162		330058	330104, 330333	330246	330421
400 E 4.2	(W124)	10/92-06/93	M 119.975	205		330058	330104, 330334		330421
500 E	(W124)	01/91-06/93	M 119.974	240		330058	330104, 330333, 330334		330421
500 E AMG 6.0	(W124)	01/92-06/93	--	275					330421
SL			**05/71 -**						
280	(R129)	08/93-10/01	M 104.943	142		330058	330104, 330333		330421
	(R129)	05/98-10/01	M 112.923, M 112.925	150		330058	330647		
300 SL	(R107)	09/85-08/89	M 103.982	132		330053	330104	330246	330421
	(R107)	09/85-08/89	M 103.982	138		330053	330104	330246	330421
	(R129)	03/89-08/93	M 103.984	140		330058	330104, 330333, 330334	330246	330421

OPS Oil Pressure Switches **BLS** Brake Light Switches **TT-RF** Temperature Transmitter and Radiator Fan Switches **RLS** Reverse Light Switches **VAR** Various

ERA S.p.A. Moncalieri (TO) Italy - tel: +39 011 6891511 - fax: +39 011 6472862 - www.eranet.it

Vehicle		Date	Engine	kW	OPS	BLS	TT-RF	RLS	VAR
300 SL-24	(R129)	03/89-07/93	M 104.981	170		330058	330104, 330333, 330334	330246	330421
320	(R129)	05/98-10/01	M 112.943	165		330058	330647		
	(R129)	09/93-10/01	M 104.991	170		330058	330104, 330333		330421
350	(R230)	03/03-	M 112.973	180			330647	330532	
	(R230)	03/06-	M 272.966	200				330532	
380 SL	(R107)	09/80-08/85	M 116.962	150		330053	330104	330246	
	(R107)	09/80-08/81	M 116.960	160		330053	330104	330246	
420 SL	(R107)	01/86-08/89	M 116.964	150		330053	330104		330421
	(R107)	01/86-08/89	M 116.964	160		330053	330104		330421
500	(R129)	05/98-10/01	M 113.961	225		330058	330647		
	(R230)	10/01-	M 113.963	225			330647	330532	
	(R129)	09/92-10/01	M 119.972	235		330058	330104, 330333, 330334		330421
	(R230)	03/06-	M 273.965	285				330532	
500 SL	(R107)	01/86-08/89	M 117.964	164		330053	330104		330421
	(R107)	05/80-12/85	M 117.960	170					330421
	(R107)	05/80-12/81	M 117.960	177					330421
	(R107)	01/86-08/89	M 117.960, M 117.964	180		330053	330104		330421
	(R107)	10/87-09/89	--	195					330421
	(R129)	09/89-08/92	M 119.960, M 119.972	240		330058	330104, 330333, 330334		330421
55 AMG	(R230)	10/01-06/02	M 113.992	350			330647	330532	
	(R230)	03/06-	M 113.995	380			330647	330532	
55 AMG Kompressor	(R230)	06/02-	M 113.992	368			330647	330532	
60 AMG	(R129)	05/97-10/01	M 122.981	280					330421
600	(R129)	07/92-10/01	M 120.981, M 120.983	290		330058	330104, 330333, 330334		330421
	(R230)	04/03-	M 275.951	368			330647	330532	
	(R230)	03/06-	M 275.954	380			330647	330532	
65 AMG	(R230)	03/04-	M 275.981	450			330647	330532	
65 AMG Black Series	(R230)	07/08-	--	493			330647		
	(R230)	07/08-	--	493			330647		
SLK			**04/96 -**						
200	(R170)	09/96-03/00	M 111.946	100		330058, 330727			
200 Kompressor	(R170)	03/00-04/04	M 111.958	120		330058, 330727		330532	
	(R171)	03/04-	M 271.944	120		330727	330647		
	(R171)	01/08-	M 271.954	135		330727	330647		
	(R170)	10/96-03/00	M 111.943	141		330058, 330727			
230 Kompressor	(R170)	09/96-03/00	M 111.973	142		330058, 330727			
	(R170)	03/00-04/04	M 111.983	145		330058, 330727		330532	
280	(R171)	01/05-	M 272.942	170		330727			
300	(R171)	04/09-	M 272.942	170		330727			

OPS Oil Pressure Switches **BLS** Brake Light Switches **TT-RF** Temperature Transmitter and Radiator Fan Switches **RLS** Reverse Light Switches **VAR** Various

Vehicle		Date	Engine	kW	OPS	BLS	TT-RF	RLS	VAR
32 AMG Kompressor	(R170)	03/01-04/04	M 112.960	260		330058, 330727	330647	330532	
320	(R170)	03/00-04/04	M 112.947	160		330058, 330727	330647	330532	
350	(R171)	06/04-	M 272.963	200		330727			
	(R171)	01/08-	M 272.969	224		330727			
55 AMG	(R171)	06/04-	M 113.989	265		330727	330647		
SLR			**04/04 -**						
5.4	(R199)	04/04-	M 155.980	460			330647		
5.4 722 Edition	(R199)	10/06-	M 155.980	478			330647		
SLR ROADSTER			**10/06 -**						
5.4	(R199)	04/07-	M 155.980	460			330647		
	(R199)	10/06-	M 155.980	478			330647		
SLS AMG			**03/10 -**						
6.2	(C197)	03/10-	M 159.980	420		330724			
SPRINTER			**02/96 -**						
209 CDI	3-t Box (906)	06/06-	OM 646.984	65		330727, 330737	330647		
	3-t Flatbed / Chassis (906)	06/06-	OM 646.984	65		330727, 330737	330647		
210 CDI	3-t Box (906)	03/09-	OM 651.955	70		330727, 330737			
	3-t Bus (906)	03/09-	OM 651.955	70		330727, 330737			
	3-t Flatbed / Chassis (906)	03/09-	OM 651.955	70		330727, 330737			
211 CDI	3-t Box (906)	06/06-	OM 646.985	80		330727, 330737	330647		
	3-t Bus (906)	06/06-	OM 646.985	80		330727, 330737	330647		
	3-t Flatbed / Chassis (906)	06/06-	OM 646.985	80		330727, 330737	330647		
213 CDI	3-t Box (906)	06/06-	OM 646.986	95		330727, 330737	330647		
	3-t Flatbed / Chassis (906)	06/06-	OM 646.986	95		330727, 330737	330647		
	3-t Flatbed / Chassis (906)	03/09-	--	95		330727, 330737			
215 CDI	3-t Box (906)	06/06-	OM 646.990	110		330727, 330737	330647		
	3-t Bus (906)	06/06-	OM 646.990	110		330727, 330737	330647		
	3-t Flatbed / Chassis (906)	06/06-	OM 646.990	110		330727, 330737	330647		
216	3-t Box (906)	09/08-	M 271.951	115		330727, 330737	330647		
	3-t Bus (906)	09/08-	M 271.951	115		330727, 330737	330647		
	3-t Flatbed / Chassis (906)	09/08-	M 271.951	115		330727, 330737	330647		
216 CDI	3-t Box (906)	03/09-	OM 651.957	120		330727, 330737			
	3-t Flatbed / Chassis (906)	03/09-	OM 651.957	120		330727, 330737			
218 CDI	3-t Box (906)	06/06-	OM 642.992	135		330727, 330737			
	3-t Flatbed / Chassis (906)	06/06-	OM 642.992	135		330727, 330737			
219 CDI	3-t Box (906)	03/09-	OM 642.992	140		330727, 330737			
	3-t Flatbed / Chassis (906)	03/09-	OM 642.992	140		330727, 330737			
224	3-t Box (906)	06/06-	M 272.979	190		330727, 330737			
	3-t Bus (906)	06/06-	M 272.979	190		330727, 330737			

OPS Oil Pressure Switches **BLS** Brake Light Switches **TT-RF** Temperature Transmitter and Radiator Fan Switches **RLS** Reverse Light Switches **VAR** Various

ERA S.p.A. Moncalieri (TO) Italy - tel: +39 011 6891511 - fax: +39 011 6472862 - www.eranet.it

Vehicle		Date	Engine	kW	OPS	BLS	TT-RF	RLS	VAR
224	3-t Flatbed / Chassis (906)	06/06-	M 272.979	190		330727, 330737			
309 CDI	3,5 Flatbed / Chassis (906)	06/06-	OM 646.984	65		330727, 330737	330647		
	3,5-t Box (906)	06/06-	OM 646.984	65		330727, 330737	330647		
310 CDI	3,5 Flatbed / Chassis (906)	03/09-	OM 651.955	70		330727, 330737			
	3,5-t Box (906)	03/09-	OM 651.955	70		330727, 330737			
	3,5-t Bus (906)	03/09-	OM 651.955	70		330727, 330737			
311 CDI	3,5 Flatbed / Chassis (906)	06/06-	OM 646.985	80		330727, 330737	330647		
	3,5-t Box (906)	06/06-	OM 646.985	80		330727, 330737	330647		
	3,5-t Bus (906)	06/06-	OM 646.985	80		330727, 330737	330647		
311 CDI 4x4	3,5 Flatbed / Chassis (906)	02/08-	OM 646.985	80		330727, 330737	330647		
	3,5-t Box (906)	02/08-	OM 646.985	80		330727, 330737	330647		
	3,5-t Bus (906)	02/08-	OM 646.985	80		330727, 330737	330647		
313 CDI	3,5 Flatbed / Chassis (906)	06/06-	OM 646.986	95		330727, 330737	330647		
	3,5-t Box (906)	06/06-	OM 646.986	95		330727, 330737	330647		
315 CDI	3,5 Flatbed / Chassis (906)	06/06-	OM 646.990	110		330727, 330737	330647		
	3,5-t Box (906)	06/06-	OM 646.990	110		330727, 330737	330647		
	3,5-t Bus (906)	06/06-	OM 646.990	110		330727, 330737	330647		
315 CDI 4x4	3,5 Flatbed / Chassis (906)	02/08-	OM 646.990	110		330727, 330737	330647		
	3,5-t Box (906)	02/08-	OM 646.990	110		330727, 330737	330647		
	3,5-t Bus (906)	02/08-	OM 646.990	110		330727, 330737	330647		
316	3,5 Flatbed / Chassis (906)	09/08-	M 271.951	115		330727, 330737	330647		
	3,5-t Box (906)	09/08-	M 271.951	115		330727, 330737	330647		
	3,5-t Bus (906)	09/08-	M 271.951	115		330727, 330737	330647		
316 CDI	3,5 Flatbed / Chassis (906)	03/09-	OM 651.957	120		330727, 330737			
	3,5-t Box (906)	03/09-	OM 651.957	120		330727, 330737			
316 CDI 4x4	3,5 Flatbed / Chassis (906)	03/09-	OM 651.957	120		330727, 330737			
	3,5-t Box (906)	03/09-	OM 651.957	120		330727, 330737			
316 NGT	3,5 Flatbed / Chassis (906)	09/08-	M 271.951	115		330727, 330737	330647		
	3,5-t Box (906)	09/08-	M 271.951	115		330727, 330737	330647		
	3,5-t Bus (906)	09/08-	M 271.951	115		330727, 330737	330647		
318 CDI	3,5 Flatbed / Chassis (906)	06/06-	OM 642.992	135		330727, 330737			
	3,5-t Box (906)	06/06-	OM 642.992	135		330727, 330737			
318 CDI 4x4	3,5 Flatbed / Chassis (906)	02/08-	OM 642.992	135		330727, 330737			
	3,5-t Box (906)	02/08-	OM 642.992	135		330727, 330737			
	3,5-t Bus (906)	02/08-	OM 642.992	135		330727, 330737			
319 CDI	3,5 Flatbed / Chassis (906)	03/09-	OM 642.992	140		330727, 330737			
	3,5-t Box (906)	03/09-	OM 642.992	140		330727, 330737			
324	3,5 Flatbed / Chassis (906)	06/06-	M 272.979	190		330727, 330737			
	3,5-t Box (906)	06/06-	M 272.979	190		330727, 330737			
324	3,5-t Bus (906)	06/06-	M 272.979	190		330727, 330737			
408 CDI	4-t Box (904)	04/00-05/06	OM 611.987	60		330727, 330739	330647	330532	

OPS Oil Pressure Switches **BLS** Brake Light Switches **TT-RF** Temperature Transmitter and Radiator Fan Switches **RLS** Reverse Light Switches **VAR** Various

Vehicle		Date	Engine	kW	OPS	BLS	TT-RF	RLS	VAR
408 CDI	4-t Bus (904)	04/00-05/06	OM 611.987	60		330727, 330739	330647	330532	
	4-t Flatbed / Chassis (904)	04/00-05/06	OM 611.987	60		330727, 330739	330647	330532	
408 D	4-t Box (904)	02/96-05/06	OM 601.943	58	330012				330421
	4-t Flatbed / Chassis (904)	02/96-05/06	OM 601.943	58	330012				330421
410 D	4-t Box (904)	02/96-05/06	OM 602.980	75	330012		330104		330421
	4-t Flatbed / Chassis (904)	02/96-05/06	OM 602.980	75	330012		330104		330421
410 D 4x4	4-t Box (904)	05/97-05/06	OM 602.980	75	330012		330104		330421
	4-t Flatbed / Chassis (904)	05/97-05/06	OM 602.980	75	330012		330104		330421
411 CDI	4-t Box (904)	04/00-05/06	OM 611.981	80		330727, 330739	330647	330532	
	4-t Bus (904)	04/00-05/06	OM 611.981	80		330727, 330739	330647	330532	
	4-t Flatbed / Chassis (904)	04/00-05/06	OM 611.981	80		330727, 330739	330647	330532	
411 CDI 4x4	4-t Box (904)	04/00-05/06	OM 611.981	80		330727, 330739	330647	330532	
	4-t Flatbed / Chassis (904)	04/00-05/06	OM 611.981	80		330727, 330739	330647	330532	
412 D	4-t Box (904)	02/96-05/06	OM 602.980	85					330421
	4-t Flatbed / Chassis (904)	02/96-05/06	OM 602.980	85					330421
	4-t Box (904)	02/96-05/06	OM 602.980	90	330012		330104		330421
	4-t Flatbed / Chassis (904)	02/96-05/06	OM 602.980	90	330012		330104		330421
412 D 4x4	4-t Box (904)	05/97-05/06	OM 602.980	85					330421
	4-t Flatbed / Chassis (904)	05/97-05/06	OM 602.980	85					330421
	4-t Box (904)	05/97-05/06	OM 602.980	90	330012		330104		330421
	4-t Flatbed / Chassis (904)	05/97-05/06	OM 602.980	90	330012		330104		330421
413 CDI	4,6-t Box (906)	06/06-	--	95		330727, 330737	330647		
	4,6-t Flatbed / Chassis (906)	06/06-	--	95		330727, 330737	330647		
	4-t Box (904)	04/00-05/06	OM 611.981	95		330727, 330739	330647	330532	
	4-t Bus (904)	04/00-05/06	OM 611.981	95		330727, 330739	330647	330532	
	4-t Flatbed / Chassis (904)	04/00-05/06	OM 611.981	95		330727, 330739	330647	330532	
413 CDI 4x4	4-t Box (904)	04/00-05/06	OM 611.981	95		330727, 330739	330647	330532	
	4-t Flatbed / Chassis (904)	04/00-05/06	OM 611.981	95		330727, 330739	330647	330532	
414	4-t Box (904)	02/96-05/06	M 111.979, M 111.984	105	330012	330727, 330739	330104	330532	330421
	4-t Bus (904)	02/96-05/06	M 111.979, M 111.984	105	330012	330727, 330739	330104	330532	330421
	4-t Flatbed / Chassis (904)	02/96-05/06	M 111.979, M 111.984	105	330012	330727, 330739	330104	330532	330421
414 4x4	4-t Box (904)	05/97-05/06	M 111.979, M 111.984	105	330012	330727, 330739	330104	330532	
	4-t Flatbed / Chassis (904)	05/97-05/06	M 111.979, M 111.984	105	330012	330727, 330739	330104	330532	330421
415 CDI	4,6-t Flatbed / Chassis (906)	06/06-	OM 646.990	110		330727, 330737	330647		
416 CDI	4-t Box (904)	04/00-05/06	OM 612.981	115		330727, 330739	330647	330532	
	4-t Bus (904)	04/00-05/06	OM 612.981	115		330727, 330739	330647	330532	
	4-t Flatbed / Chassis (904)	04/00-05/06	OM 612.981	115		330727, 330739	330647	330532	
	4,6-t Box (906)	03/09-	OM 651.957	120		330727, 330737			
416 CDI	4,6-t Flatbed / Chassis (906)	03/09-	OM 651.957	120		330727, 330737			
416 CDI 4x4	4-t Box (904)	04/00-05/06	OM 612.981	115		330727, 330739	330647	330532	

OPS Oil Pressure Switches **BLS** Brake Light Switches **TT-RF** Temperature Transmitter and Radiator Fan Switches **RLS** Reverse Light Switches **VAR** Various

ERA S.p.A. Moncalieri (TO) Italy - tel: +39 011 6891511 - fax: +39 011 6472862 - www.eranet.it

Vehicle		Date	Engine	kW	OPS	BLS	TT-RF	RLS	VAR
416 CDI 4x4	4-t Flatbed / Chassis (904)	04/00-05/06	OM 612.981	115		330727, 330739	330647	330532	
418 CDI	4,6-t Flatbed / Chassis (906)	06/06-	OM 642.992	135		330727, 330737			
419 CDI	4,6-t Box (906)	03/09-	OM 642.992	140		330727, 330737			
	4,6-t Flatbed / Chassis (906)	03/09-	OM 642.992	140		330727, 330737			
424	4,6-t Box (906)	06/06-	M 272.979	190		330727, 330737			
	4,6-t Flatbed / Chassis (906)	06/06-	M 272.979	190		330727, 330737			
509 CDI	5-t Box (906)	06/06-	OM 646.984	65		330727, 330737	330647		
	5-t Flatbed / Chassis (906)	06/06-	OM 646.984	65		330727, 330737	330647		
510 CDI	5-t Box (906)	03/09-	OM 651.955	70		330727, 330737			
	5-t Flatbed / Chassis (906)	03/09-	OM 651.955	70		330727, 330737			
511 CDI	5-t Box (906)	06/06-	OM 646.985	80		330727, 330737	330647		
	5-t Flatbed / Chassis (906)	06/06-	OM 646.985	80		330727, 330737	330647		
513 CDI	5-t Box (906)	06/06-	OM 646.986	95		330727, 330737	330647		
	5-t Flatbed / Chassis (906)	06/06-	OM 646.986	95		330727, 330737	330647		
515 CDI	5-t Flatbed / Chassis (906)	06/06-	OM 646.990	110		330727, 330737	330647		
516	5-t Flatbed / Chassis (906)	09/08-	M 271.951	115		330727, 330737	330647		
516 CDI	5-t Box (906)	03/09-	OM 651.957	120		330727, 330737			
	5-t Flatbed / Chassis (906)	03/09-	OM 651.957	120		330727, 330737			
516 NGT	5-t Flatbed / Chassis (906)	09/08-	M 271.951	115		330727, 330737	330647		
518 CDI	5-t Box (906)	06/06-	OM 642.992	135		330727, 330737			
	5-t Flatbed / Chassis (906)	06/06-	OM 642.992	135		330727, 330737			
519 CDI	5-t Box (906)	03/09-	OM 642.992	140		330727, 330737			
	5-t Flatbed / Chassis (906)	03/09-	OM 642.992	140		330727, 330737			
524	5-t Box (906)	06/06-	M 272.979	190		330727, 330737			
	5-t Flatbed / Chassis (906)	06/06-	M 272.979	190		330727, 330737			
SPRINTER 2-t		**01/95 - 05/06**							
208 CDI	Box (901, 902)	04/00-05/06	OM 611.987	60		330727, 330739	330647	330532	
	Bus (901, 902)	04/00-05/06	OM 611.987	60		330727, 330739	330647	330532	
	Flatbed / Chassis (901, 902)	04/00-05/06	OM 611.987	60		330727, 330739	330647	330532	
208 D	Box (901, 902)	02/95-04/00	OM 601.943	58	330012				330421
	Bus (901, 902)	02/95-04/00	OM 601.943	58	330012				330421
	Flatbed / Chassis (901, 902)	01/95-04/00	OM 601.943	58	330012				330421
	Box (901, 902)	10/96-04/00	OM 601.943	60	330012				330421
	Flatbed / Chassis (901, 902)	09/96-04/00	OM 601.943	60	330012				330421
210 D	Box (901, 902)	01/97-04/00	OM 602.980	75	330012		330104		330421
	Bus (901, 902)	03/97-04/00	OM 602.980	75	330012		330104		330421
	Flatbed / Chassis (901, 902)	01/97-04/00	OM 602.980	75	330012		330104		330421
211 CDI	Box (901, 902)	04/00-05/06	OM 611.981	80		330727, 330739	330647		
	Bus (901, 902)	04/00-05/06	OM 611.981	80		330727, 330739	330647		

OPS Oil Pressure Switches **BLS** Brake Light Switches **TT-RF** Temperature Transmitter and Radiator Fan Switches **RLS** Reverse Light Switches **VAR** Various

Vehicle		Date	Engine	kW	OPS	BLS	TT-RF	RLS	VAR
211 CDI	Flatbed / Chassis (901, 902)	04/00-05/06	OM 611.981	80		330727, 330739	330647		
212 D	Box (901, 902)	02/95-04/00	OM 602.980	90	330012		330104		330421
	Bus (901, 902)	02/95-04/00	OM 602.980	90	330012		330104		330421
	Flatbed / Chassis (901, 902)	02/95-04/00	OM 602.980	90	330012		330104		330421
213 CDI	Box (901, 902)	04/00-05/06	OM 611.981	95		330727, 330739	330647	330532	
	Bus (901, 902)	04/00-05/06	OM 611.981	95		330727, 330739	330647	330532	
	Flatbed / Chassis (901, 902)	04/00-05/06	OM 611.981	95		330727, 330739	330647	330532	
214	Box (901, 902)	02/95-05/06	M 111.979, M 111.984	105	330012	330727, 330739	330104	330532	330421
	Bus (901, 902)	02/95-05/06	M 111.979, M 111.984	105	330012	330727, 330739	330104	330532	330421
	Flatbed / Chassis (901, 902)	02/95-05/06	M 111.979, M 111.984	105	330012	330727, 330739	330104	330532	330421
216 CDI	Box (901, 902)	04/00-05/06	OM 612.981	115		330727, 330739	330647	330532	
	Bus (901, 902)	04/00-05/06	OM 612.981	115		330727, 330739	330647	330532	
	Flatbed / Chassis (901, 902)	04/00-05/06	OM 612.981	115		330727, 330739	330647	330532	
SPRINTER 3-t		**01/95 - 05/06**							
308 CDI	Box (903)	04/00-05/06	OM 611.987	60		330727, 330739	330647	330532	
	Bus (903)	04/00-05/06	OM 611.987	60		330727, 330739	330647	330532	
	Flatbed / Chassis (903)	04/00-05/06	OM 611.987	60		330727, 330739	330647	330532	
308 D	Bus (903)	02/95-04/00	OM 601.943	58	330012				330421
308 D 2.3	Box (903)	02/95-04/00	OM 601.943	58	330012				330421
	Flatbed / Chassis (903)	02/95-04/00	OM 601.943	58	330012				330421
	Box (903)	02/95-04/00	OM 601.943	60	330012				330421
	Flatbed / Chassis (903)	11/96-04/00	OM 601.943	60	330012				330421
310 D 4x4	Bus (903)	05/97-08/02	OM 602.980	75	330012		330104		330421
310 D 2.9	Box (903)	02/95-04/00	OM 602.980	75	330012		330104		330421
	Flatbed / Chassis (903)	01/97-04/00	OM 602.980	75	330012		330104		330421
311 CDI	Box (903)	04/00-05/06	OM 611.981	80		330727, 330739	330647	330532	
	Bus (903)	04/00-05/06	OM 611.981	80		330727, 330739	330647	330532	
	Flatbed / Chassis (903)	04/00-05/06	OM 611.981	80		330727, 330739	330647	330532	
311 CDI 4x4	Box (903)	08/02-05/06	OM 611.981	80		330727, 330739	330647	330532	
	Bus (903)	08/02-05/06	OM 611.981	80		330727, 330739	330647	330532	
	Flatbed / Chassis (903)	08/02-05/06	OM 611.981	80		330727, 330739	330647	330532	
312 D 2.9	Box (903)	02/95-04/00	OM 602.980	90	330012		330104		330421
	Bus (903)	02/95-04/00	OM 602.980	90	330012		330104		330421
	Flatbed / Chassis (903)	02/95-04/00	OM 602.980	90	330012		330104		330421
312 D 2.9 4x4	Box (903)	05/97-08/02	OM 602.980	90	330012		330104		330421
	Bus (903)	05/97-08/02	OM 602.980	90	330012		330104		330421
313 CDI	Box (903)	04/00-05/06	OM 611.981	95		330727, 330739	330647	330532	
	Bus (903)	04/00-05/06	OM 611.981	95		330727, 330739	330647	330532	
	Flatbed / Chassis (903)	04/00-05/06	OM 611.981	95		330727, 330739	330647	330532	

OPS Oil Pressure Switches **BLS** Brake Light Switches **TT-RF** Temperature Transmitter and Radiator Fan Switches **RLS** Reverse Light Switches **VAR** Various

ERA S.p.A. Moncalieri (TO) Italy - tel: +39 011 6891511 - fax: +39 011 6472862 - www.eranet.it

Vehicle		Date	Engine	kW	OPS	BLS	TT-RF	RLS	VAR
313 CDI 4x4	Box (903)	08/02-05/06	OM 611.981	95		330727, 330739	330647	330532	
	Bus (903)	08/02-05/06	OM 611.981	95		330727, 330739	330647	330532	
	Flatbed / Chassis (903)	08/02-05/06	OM 611.981	95		330727, 330739	330647	330532	
314	Box (903)	02/95-05/06	M 111.979, M 111.984	105	330012	330727, 330739	330104	330532	330421
	Bus (903)	02/95-05/06	M 111.979, M 111.984	105	330012	330727, 330739	330104	330532	330421
	Flatbed / Chassis (903)	02/95-05/06	M 111.979, M 111.984	105	330012	330727, 330739	330104	330532	330421
314 4x4	Box (903)	08/02-05/06	M 111.979, M 111.984	105	330012	330727, 330739	330104	330532	
	Bus (903)	08/02-05/06	M 111.979, M 111.984	105	330012	330727, 330739	330104	330532	
	Flatbed / Chassis (903)	08/02-05/06	M 111.979, M 111.984	105	330012	330727, 330739	330104	330532	330421
316 CDI	Box (903)	04/00-05/06	OM 612.981	115		330727, 330739	330647		
	Bus (903)	04/00-05/06	OM 612.981	115		330727, 330739	330647		
	Flatbed / Chassis (903)	04/00-05/06	OM 612.981	115		330727, 330739	330647		
316 CDI 4x4	Box (903)	08/02-05/06	OM 612.981	115		330727, 330739	330647		
	Bus (903)	08/02-05/06	OM 612.981	115		330727, 330739	330647		
	Flatbed / Chassis (903)	08/02-05/06	OM 612.981	115		330727, 330739	330647		
T1		**01/77 - 02/96**							
207 D 2.4	Box (601)	06/82-01/90	OM 616.937, OM 616.939	53		330426	330104		
208 D 2.3	Box (601)	11/88-02/96	OM 601.940	58		330426	330104, 330118		
	Bus (601)	10/88-02/96	OM 601.940	58		330426	330104, 330118		
	Flatbed / Chassis (601)	11/88-02/96	OM 601.940	58		330426	330104, 330118		
	Box (601)	10/88-02/96	OM 601.940	60		330426	330104, 330118		
	Bus (601)	10/88-02/96	OM 601.940	60		330426	330104, 330118		
	Flatbed / Chassis (601)	06/89-02/96	OM 601.940	60		330426	330104, 330118		
209 D 2.9	Box (601)	12/82-01/90	OM 617.913	65		330426	330104		
	Bus (601)	12/82-01/90	OM 617.913	65		330426	330104		
	Flatbed / Chassis (601)	12/82-01/90	OM 617.913	65		330426	330104		
210 2.3	Box (601)	07/82-02/96	M 102.942, M 102.946	70		330426	330104		
	Bus (601)	07/82-01/90	M 102.942	70		330426	330104		
	Flatbed / Chassis (601)	04/77-10/89	M 102.942	70		330426	330104		
	Box (601)	05/89-02/96	M 102.945	77		330426	330104, 330149		
	Bus (601)	05/89-02/96	M 102.945	77		330426	330104, 330149		
210 D 2.8	Box (601)	10/88-02/96	OM 602.940	70		330426	330104, 330118		
	Bus (601)	11/88-02/96	OM 602.940	70		330426	330104, 330118		
	Box (601)	10/88-02/96	OM 602.940	72		330426	330104, 330118		
	Bus (601)	11/88-02/96	OM 602.940	72		330426	330104, 330118		
	Flatbed / Chassis (601)	11/88-02/96	OM 602.940	72		330426	330104, 330118		
210 D 2.9	Flatbed / Chassis (601)	11/88-02/96	OM 602.940	70		330426	330104, 330118		
307 D 2.4	Box (602)	10/82-01/90	OM 616.937, OM 616.939	53		330426	330104		
	Flatbed / Chassis (602)	06/82-01/90	OM 616.937, OM 616.939	53		330426	330104		

OPS Oil Pressure Switches **BLS** Brake Light Switches **TT-RF** Temperature Transmitter and Radiator Fan Switches **RLS** Reverse Light Switches **VAR** Various

Vehicle		Date	Engine	kW	OPS	BLS	TT-RF	RLS	VAR
308 D 2.3	Box (602)	11/88-02/96	OM 601.940	58		330426	330104, 330118		
	Bus (602)	05/90-02/96	OM 601.940	58		330426	330104, 330118		
308 D 2.3	Flatbed / Chassis (602)	06/89-02/96	OM 601.940	58		330426	330104, 330118		
	Box (602)	06/89-02/96	OM 601.940	60		330426	330104, 330118		
	Bus (602)	06/89-02/96	OM 601.940	60		330426	330104, 330118		
	Flatbed / Chassis (602)	06/89-02/96	OM 601.940	60		330426	330104, 330118		
309 D 3.0	Box (602)	10/82-01/90	OM 617.913	65		330426	330104		
	Flatbed / Chassis (602)	10/82-01/90	OM 617.913	65		330426	330104		
310 D 2.9	Box (602)	06/89-02/96	OM 602.940	70		330426	330104, 330118		
	Bus (602)	06/89-02/96	OM 602.940	70		330426	330104, 330118		
	Flatbed / Chassis (602)	06/89-02/96	OM 602.940	70		330426	330104, 330118		
	Box (602)	06/89-02/96	OM 602.940	72		330426	330104, 330118		
	Bus (602)	06/90-02/96	OM 602.940	72		330426	330104, 330118		
	Flatbed / Chassis (602)	06/89-02/96	OM 602.940	72		330426	330104, 330118		
UNIMOG			**01/66 -**						
U 3000		09/02-	OM 904.953	110					330421
		09/02-	OM 904.952	130					330421
U 4000		09/02-	OM 904.953	110					330421
U 5000		09/02-	OM 924.916	160					330421
V-CLASS			**02/96 - 07/03**						
V 200	(638/2)	02/97-07/03	M 111.948	95	330012	330727, 330739	330104, 330184		
V 200 CDI	(638/2)	03/99-07/03	OM 611.980	75		330727, 330739	330184, 330647		
V 220 CDI	(638/2)	03/99-07/03	OM 611.980	90		330727, 330739	330184, 330647		
V 230	(638/2)	10/96-07/03	M 111.978	105	330012	330727, 330739	330104, 330184		
V 230 TD	(638/2)	09/96-07/03	OM 601.970	72	330012		330184		
V 280	(638/2)	08/97-07/03	M 104.900	128	330322, 330342	330058, 330739	330184, 330190, 330286, 330546		
VANEO			**02/02 -**						
1.6	(414)	02/02-	M 166.961	60		330727, 330739	330647		
	(414)	02/02-	M 166.961	75		330727, 330739	330647		
1.7 CDI	(414)	02/02-	OM 668.914	55		330727, 330739	330647		
	(414)	02/02-	OM 668.914	67		330727, 330739	330647		
1.9	(414)	02/02-	M 166.991	92		330727, 330739	330647		
VIANO			**09/03 -**						
2,0 CDI 4-matic	(W639)	07/05-	OM 646.982	80		330727, 330737, 330739	330647	330532	
3,0	(W639)	09/03-	M 112.951	140		330727, 330737, 330739	330647	330532	
3.2	(W639)	09/03-	M 112.951	160		330727, 330737, 330739	330647	330532	
3.7	(W639)	06/04-	M 112.976	170		330727, 330737, 330739	330647	330532	

OPS Oil Pressure Switches **BLS** Brake Light Switches **TT-RF** Temperature Transmitter and Radiator Fan Switches **RLS** Reverse Light Switches **VAR** Various

ERA S.p.A. Moncalieri (TO) Italy - tel: +39 011 6891511 - fax: +39 011 6472862 - www.eranet.it

Vehicle		Date	Engine	kW	OPS	BLS	TT-RF	RLS	VAR
CDI 2.0	(W639)	09/03-	OM 646.982	80		330727, 330737, 330739	330647	330532	
	(W639)	08/05-	OM 646.982	85		330727, 330737	330647		
CDI 2.2	(W639)	09/03-	OM 646.982	110		330727, 330737, 330739	330647	330532	
CDI 2.2 4-matic	(W639)	07/05-	OM 646.982	110		330727, 330737, 330739	330647		
CDI 3.0	(W639)	03/06-	OM 642.990	150		330727, 330737		330532	
VITO			**02/96 -**						
108 CDI 2.2	Box (638)	03/99-07/03	OM 611A (60 KW CDI)	60		330727, 330739	330184, 330647		
	Bus (638)	03/99-07/03	OM 611A (60 KW CDI)	60		330727, 330739	330184, 330647		
108 D 2.3	Box (638)	03/97-07/03	OM 601.942	58	330012		330184		
	Bus (638)	02/96-07/03	OM 601.942	58	330012		330184		
109 CDI	Bus (W639)	09/03-	OM 646.983	65		330727, 330737, 330739	330647	330532	
	Bus (W639)	09/06-	OM 646.980	70		330727, 330737	330647		
109 CDI 4x4	Bus (W639)	09/07-	OM 646.981	70		330727, 330737	330647	330532	
110 CDI 2.2	Box (638)	03/99-07/03	OM 611LA (75 KW CDI)	75		330727, 330739	330184, 330647		
	Bus (638)	03/99-07/03	OM 611LA (75 KW CDI)	75		330727, 330739	330184, 330647		
110 D 2.3	Box (638)	03/97-07/03	OM 601.970	72	330012		330184		
110 TD 2.3	Bus (638)	02/96-07/03	OM 601.970	72	330012		330184		
111 CDI	Bus (W639)	09/03-	OM 646.982	80		330727, 330737, 330739	330647	330532	
	Bus (W639)	09/07-	OM 646.982	85		330727, 330737, 330739	330647		
111 CDI 4x4	Bus (W639)	09/07-	OM 646.982	80		330727, 330737, 330739	330647		
112 CDI 2.2	Box (638)	03/99-07/03	OM 611.980	90		330727, 330739	330184, 330647		
	Bus (638)	03/99-07/03	OM 611.980	90		330727, 330739	330184, 330647		
113 2.0	Box (638)	03/97-07/03	M 111.948	95	330012	330727, 330739	330104, 330184		
	Bus (638)	02/96-07/03	M 111.948	95	330012	330727, 330739	330104, 330184		
114 2.3	Box (638)	03/97-07/03	M 111.978, M 111.980	105	330012	330727, 330739	330104, 330184		
	Bus (638)	12/96-07/03	M 111.978, M 111.980	105	330012	330727, 330739	330104, 330184		
115 CDI	Bus (W639)	09/03-	OM 646.982	110		330727, 330737, 330739	330647	330532	
115 CDI 4x4	Bus (W639)	09/07-	OM 646.982	110		330727, 330737, 330739	330647		
119	Bus (W639)	09/03-	M 112.951	140		330727, 330737, 330739	330647	330532	
120 CDI	Bus (W639)	09/07-	OM 642.990	150		330727, 330737			
122	Bus (W639)	09/03-	M 112.951	160		330727, 330737, 330739	330647	330532	
123	Bus (W639)	06/04-	M 112.976	170		330727, 330737, 330739	330647	330532	
126	Bus (W639)	09/07-	M 272.978	190		330727, 330737			

OPS Oil Pressure Switches **BLS** Brake Light Switches **TT-RF** Temperature Transmitter and Radiator Fan Switches **RLS** Reverse Light Switches **VAR** Various

Vehicle		Date	Engine	kW	OPS	BLS	TT-RF	RLS	VAR
VITO / MIXTO			**09/03 -**						
109 CDI	Box (W639)	09/03-	OM 646.983	65		330727, 330737, 330739	330647	330532	
109 CDi	Box (W639)	08/06-	OM 646.981	70		330727, 330737	330647		
111 CDI	Box (W639)	09/03-	OM 646.982	80		330727, 330737, 330739	330647	330532	
	Box (W639)	09/07-	OM 646.982	85		330727, 330737, 330739	330647		
111 CDI 4x4	Box (W639)	09/07-	OM 646.982	80		330727, 330737, 330739	330647		
115 CDI	Box (W639)	09/03-	OM 646.982	110		330727, 330737, 330739	330647	330532	
115 CDI 4x4	Box (W639)	09/07-	OM 646.982	110		330727, 330737, 330739	330647		
119	Box (W639)	09/03-	M 112.951	140		330727, 330737, 330739	330647	330532	
120 CDI	Box (W639)	09/07-	OM 642.990	150		330727, 330737			
122	Box (W639)	09/03-	M 112.951	160		330727, 330737, 330739	330647	330532	
123	Box (W639)	06/04-07/08	M 112.976	170		330727, 330737, 330739	330647		
126	Box (W639)	09/07-	M 272.978	190		330727, 330737			
MG									
MG TF			**03/02 -**						
115		03/02-	16 K4F	85		330061, 330429	330643		
120		03/02-	18 K4F	88	330019, 330356	330061, 330429	330530, 330643		
135		03/02-	18 K4F	100	330019, 330356	330061, 330429	330530, 330643		
160		03/02-	18 K4K	118	330019, 330356	330061, 330429	330530, 330643		
MG ZR			**06/01 -**						
105		06/01-	14 K4F	76	330019, 330356	330061	330530, 330643	330263	
120		06/01-	18 K4F	86	330019, 330356	330061	330530, 330643		
160		06/01-	18 K4K	118	330019, 330356	330061	330530, 330643		
Turbodiesel		06/01-	20 T2N	74	330019, 330356	330061	330116, 330177, 330187		
MG ZS			**07/01 -**						
120		07/01-	18 K4F	86	330356	330061	330643		
	Hatchback	07/01-	18 K4F	86	330356	330061	330643		
180		07/01-	25 K4F	130		330061			
	Hatchback	07/01-	25 K4F	130		330061			
MG ZT			**06/01 -**						
160		06/01-	25 K4F	118	330356		330643	330244	
190		06/01-	25 K4F	140	330356		330643	330244	

OPS Oil Pressure Switches **BLS** Brake Light Switches **TT-RF** Temperature Transmitter and Radiator Fan Switches **RLS** Reverse Light Switches **VAR** Various

ERA S.p.A. Moncalieri (TO) Italy - tel: +39 011 6891511 - fax: +39 011 6472862 - www.eranet.it

Vehicle		Date	Engine	kW	OPS	BLS	TT-RF	RLS	VAR
MG ZT- T			**10/01 -**						
160	T	10/01-	25 K4F	118	330356		330643	330244	
190	T	10/01-	25 K4F	140	330356		330643	330244	
MGF			**03/95 - 03/02**						
1,8 i VVC	(RD)	10/01-03/02	18 K4K	118	330019, 330356	330061, 330429	330530, 330643		
1.8 i 16V	(RD)	03/95-03/02	18 K4F	88	330019, 330356	330061, 330429	330530, 330643		
1.8 i VVC	(RD)	03/95-03/02	18 K4K	107	330019, 330356	330061, 330429	330530, 330643		
MINI									
MINI			**06/01 -**						
1.4	(R50, R53)	04/03-10/06	--	55		330724		330249, 330256	
Cooper	(R50, R53)	06/01-	N12B16A	85		330724		330249, 330256	
	Convertible (R52)	07/04-	W10B16A	85		330724		330256	
	(R56)	10/06-	N12B16A	88	330026	330724	330552		
	Convertible (R57)	03/09-	N12B16A	88		330724			
Cooper D	(R56)	03/07-	9HZ (DV6TED4)	80		330724			
Cooper S	(R50, R53)	03/02-	N14 B16 A	120		330724		330244	
	(R50, R53)	07/04-	W11B16A	125		330724		330244	
	Convertible (R52)	07/04-	W11B16A	125		330724		330244	
	(R56)	10/06-	N14 B16 A	128	330026	330724	330552		
	Convertible (R57)	03/09-	N14 B16 A	128		330724			
John Cooper Works	Convertible (R52)	07/04-	W11B16A	155		330724		330244	
One	(R50, R53)	06/01-	W10B16A	66		330724		330249, 330256	
	Convertible (R52)	07/04-	W10B16A	66		330724		330256	
	(R56)	03/07-	N12B14A	70		330724			
One D	(R50, R53)	06/03-	1ND	55	330022	330724	330130	330244	
	(R50, R53)	06/03-	1ND-TV	65	330022	330724	330130	330244	
Works	(R50, R53)	11/03-	W11B16A	155		330724		330244	
MINI CLUBMAN			**10/07 -**						
Cooper	(R55)	10/07-	N12B16A	88		330724			
Cooper D	(R55)	10/07-	9HZ (DV6TED4)	80		330724			
Cooper S	(R55)	10/07-	N14 B16 A	128		330724			
John Cooper Works	(R55)	03/08-	N14 B16 C	155		330724			
MITSUBISHI									
3000 GT			**06/92 - 08/99**						
3.0 i 24V 4x4	(Z16A)	06/92-08/99	6G72 (DOHC 24V)	210	330015	330039, 330701	330100, 330191, 330642, 330667	330247	

OPS Oil Pressure Switches **BLS** Brake Light Switches **TT-RF** Temperature Transmitter and Radiator Fan Switches **RLS** Reverse Light Switches **VAR** Various

Vehicle		Date	Engine	kW	OPS	BLS	TT-RF	RLS	VAR
ASX			**02/10 -**						
1.6	(GA_W_)	06/10-	4A92	86		330738			
1.8 DI-D	(GA_W_)	06/10-	4N13	110		330738			
1.8 DI-D 4WD	(GA_W_)	06/10-	4N13	110		330738			
CARISMA			**07/95 - 06/06**						
1.6	(DA_)	07/95-06/06	4 G 92	66	330020, 330340	330055	330100, 330619	330248	
	Saloon (DA_)	09/96-06/06	4 G 92	66	330020, 330340	330055	330100, 330619	330248	
	(DA_)	12/98-06/06	4 G 92	70	330020, 330340	330055	330100, 330619	330248	
	Saloon (DA_)	12/98-06/06	4 G 92	70	330020, 330340	330055	330100, 330619	330248	
	(DA_)	05/97-06/06	4 G 92	73	330020, 330340	330055	330100, 330619	330248	
	Saloon (DA_)	05/97-06/06	4 G 92	73	330020, 330340	330055	330100, 330619	330248	
	(DA_)	09/00-06/06	4 G 92	76	330020, 330340	330055	330100, 330619	330248	
	Saloon (DA_)	09/00-06/06	4 G 92	76	330020, 330340	330055	330100, 330619	330248	
1.8	(DA_)	07/95-06/06	4G93	85	330015, 330020, 330340	330055	330619	330248	
	Saloon (DA_)	09/96-06/06	4G93	85	330015, 330020, 330340	330055	330619	330248	
1.8 16V	(DA_)	07/95-06/06	4G93	103	330015, 330020, 330340	330055	330619	330248	
1.8 16V GDI	(DA_)	09/97-06/06	4G93	92	330020	330055	330619	330247	
	Saloon (DA_)	09/97-06/06	4G93	92	330020	330055	330619	330247	
1.8 GDI	(DA_)	10/00-06/06	4G93	90	330020	330055	330619	330247	
	Saloon (DA_)	10/00-06/06	4G93	90	330020	330055	330619	330247	
1.9 DI-D	(DA_)	09/00-06/06	F9Q1	75	330018	330701	330692	330240	
	Saloon (DA_)	09/00-06/06	F9Q1	75	330018	330701	330692	330240	
	(DA_)	09/00-06/06	F9Q2	85	330018	330701	330692	330240	
	Saloon (DA_)	09/00-06/06	F9Q2	85	330018	330701	330692	330240	
1.9 TD	(DA_)	10/96-09/00	F8QT	66	330018, 330021, 330340	330055	330139, 330153	330248	
	Saloon (DA_)	10/96-09/00	F8QT	66	330018, 330021, 330340	330055	330139, 330153	330248	
COLT			**10/82 -**						
1.1	VI (Z_)	10/04-	3A91	55	330539	330510, 330717	330619		
1.3	III (C5_A)	04/88-05/92	4 G 13	51	330009, 330567	330039, 330081	330100, 330562	330247	
	V (CJ_A)	08/02-07/05	4G19	66	330015	330039	330100, 330619	330247	
	VI (Z_)	06/04-	4A90	70	330539	330510, 330717	330619		
1.3 12V	III (C5_A)	04/88-05/92	4 G 13 (12V)	55	330009, 330567	330039	330100, 330642	330247	
1.3 EL,GL	II (C1_A)	06/86-04/88	G13B	49	330015	330039	330100, 330562	330247	
1.3 GLi 12V	IV (CA_A)	04/92-04/96	4 G 13 (BJ92-.., 12V)	55	330009, 330567	330039	330100, 330642	330247	
1.5	III (C5_A)	07/90-05/92	4 G 15	66	330009, 330567	330039	330100, 330191, 330642	330247	
	VI (Z_)	07/06-	4A91	77		330717			
	VI (Z_)	06/04-	4A91	80	330539	330510, 330717	330619		

OPS Oil Pressure Switches **BLS** Brake Light Switches **TT-RF** Temperature Transmitter and Radiator Fan Switches **RLS** Reverse Light Switches **VAR** Various

ERA S.p.A. Moncalieri (TO) Italy - tel: +39 011 6891511 - fax: +39 011 6472862 - www.eranet.it

Vehicle		Date	Engine	kW	OPS	BLS	TT-RF	RLS	VAR
1.5	V (CJ_A)	09/95-05/04	--	81	330015	330039	330100	330247	
1.5 CZT	VI (Z_)	03/05-	4G15T	110	330539	330510, 330717	330619		
1.5 DI-D	VI (Z_)	08/04-	--	50		330510, 330717	330647		
	VI (Z_)	08/04-	OM639	70		330510, 330717	330647		
1.5 GLXi	III (C5_A)	04/88-05/92	4 G 15	62	330009, 330567	330039, 330081	330100, 330191, 330562	330247	
1.5 Turbo	VI (Z_)	09/06-	4G15T	113		330717			
1.6 4x4	IV (CA_A)	08/93-08/95	4 G 92	84	330020	330039	330100, 330191, 330619	330247	
1.6 GLXi 16V	IV (CA_A)	04/92-04/96	4 G 92	83	330020	330039	330100, 330191, 330619	330247	
1.6 GTi 16V	III (C5_A)	04/88-05/90	4G61	91	330015	330039, 330081	330100, 330562	330247	
1.8 Diesel GLX	III (C5_A)	04/88-05/92	4 D 65	44	330015	330039, 330081		330247	
1.8 GTi 16V	III (C5_A)	06/90-05/92	4G67	100	330015	330039, 330081	330100, 330562	330247	
	IV (CA_A)	04/92-04/96	4G93	103	330015	330039	330100, 330619	330247	
1300	V (CJ_A)	09/00-07/05	4 G 13 (16 V)	60	330015	330039	330100, 330619, 330667	330247	
1300 GL,GLX	V (CJ_A)	05/96-09/00	4 G 13 (12V)	55	330015	330039	330100, 330619, 330667	330247	
1600 GLX	V (CJ_A)	05/96-09/00	4 G 92	66	330020	330039	330619	330247	
COLT CZC			**05/06 -**						
1.5 Turbo	Convertible (RG)	05/06-	4G15T	110		330717			
ECLIPSE			**12/89 - 04/99**						
1.8	I (D2_A)	12/89-03/94	4G37	68	330015	330039, 330701	330100, 330562	330247	
2.0 i 16V	I (D2_A)	04/91-11/95	4 G 63 (DOHC 16V)	110	330015	330039, 330701	330100, 330562	330247	
2.0 i 16V 4x4	I (D2_A)	04/91-11/95	4 G 63 (DOHC 16V)	110	330015	330039, 330701	330100, 330562	330247	
2.0 Turbo	II (D3_)	04/94-04/99	4 G 63 T (DOHC 16V)	147	330015	330039, 330701	330100, 330619	330247	
2.0 Turbo 4WD	I (D2_A)	12/89-03/94	--	157	330015	330039, 330701	330100, 330562	330247	
GALANT			**11/87 - 10/04**						
1.8	IV Saloon (E3_A)	11/87-08/90	4G37	63	330015	330039	330100	330247	
	IV (E3_A)	11/88-10/92	4G37	66	330015	330039	330100, 330562	330247	
	IV Saloon (E3_A)	11/87-10/92	4G37	66	330015	330039	330100, 330562	330247	
1.8 GLSI	V (E5_A, E7_A, E8_A)	11/92-08/96	4G93	93	330020	330039	330100, 330619	330247	
	V Saloon (E5_A, E7_A, E8_A)	11/92-08/96	4G93	93	330020	330039	330100, 330619	330247	
1.8 Turbo-D	IV (E3_A)	11/88-10/92	4 D 65 T	55	330015	330039		330247	
	IV Saloon (E3_A)	12/87-10/92	4 D 65 T	55	330015	330039			
2.0	IV (E3_A)	04/89-10/92	4G63 (SOHC 8V)	80	330015	330039, 330701	330100, 330562	330247	
	IV Saloon (E3_A)	11/87-10/92	4G63 (SOHC 8V)	80	330015	330039, 330701	330100, 330562	330247	
	VI (EA_)	09/96-09/00	4 G 63 (DOHC 16V)	100	330015		330100, 330619	330247	
	VI Estate (EA_)	09/96-09/00	4 G 63 (DOHC 16V)	100	330015		330100, 330619	330247	
2.0 4x4	IV (E3_A)	04/89-10/92	4G63 (SOHC 8V)	80	330015	330039, 330701	330100, 330562	330247	

OPS Oil Pressure Switches **BLS** Brake Light Switches **TT-RF** Temperature Transmitter and Radiator Fan Switches **RLS** Reverse Light Switches **VAR** Various

Vehicle		Date	Engine	kW	OPS	BLS	TT-RF	RLS	VAR
2.0 4x4	IV Saloon (E3_A)	12/88-10/92	4G63 (SOHC 8V)	80	330015	330039, 330701	330100, 330562	330247	
2.0 GLSI	V (E5_A, E7_A, E8_A)	11/92-08/96	4G63 (SOHC 8V)	101	330015	330039, 330701	330100, 330619	330247	
	V Saloon (E5_A, E7_A, E8_A)	11/92-08/96	4G63 (SOHC 8V)	101	330015	330039, 330701	330100, 330619	330247	
2.0 GLSI 4x4	V (E5_A, E7_A, E8_A)	11/92-08/96	4G63 (SOHC 8V)	101	330015	330039, 330701	330100, 330619	330247	
	V Saloon (E5_A, E7_A, E8_A)	11/92-08/96	4G63 (SOHC 8V)	101		330701			
2.0 GLSTD	V (E5_A, E7_A, E8_A)	11/92-08/96	4 D 68 T	66	330015	330039	330191, 330667	330247	
	V Saloon (E5_A, E7_A, E8_A)	11/92-08/96	4 D 68 T	66	330015	330039	330191, 330667	330247	
2.0 GTI 16V	IV (E3_A)	11/88-10/92	4G63 (DOHC 16V)	106	330015	330039, 330701	330100, 330562, 330667	330247	
	IV Saloon (E3_A)	11/87-10/92	4G63 (DOHC 16V)	106	330015	330039, 330701	330100, 330562, 330667	330247	
	IV (E3_A)	11/88-10/92	4G63 (DOHC 16V)	107	330015	330039, 330701	330100, 330562, 330667	330247	
	IV Saloon (E3_A)	11/88-10/92	4G63 (DOHC 16V)	107		330701	330667		
2.0 GTI 16V 4x4	IV (E3_A)	07/89-12/92	4G63 (DOHC 16V)	106	330015	330039, 330701	330100, 330562	330247	
	IV Saloon (E3_A)	06/88-10/92	4G63 (DOHC 16V)	106	330015	330039, 330701	330100, 330562	330247	
	IV Saloon (E3_A)	09/91-10/92	4G63 (DOHC 16V)	110		330701			
2.0 TDI	VI (EA_)	09/96-10/04	4D68 SOHC	66	330020		330100	330247	
	VI Estate (EA_)	09/96-10/03	4D68 SOHC	66	330020		330100	330247	
2.0 V6-24	V (E5_A, E7_A, E8_A)	11/92-08/96	6A12	110	330015	330039, 330701	330100, 330619	330247	
	V Saloon (E5_A, E7_A, E8_A)	11/92-08/96	6A12	110		330701			
2.4 GDI	VI (EA_)	09/00-10/04	4G64 (GDI)	106	330020		330100, 330619	330247	
	VI Estate (EA_)	09/00-10/03	4G64 (GDI)	106	330020		330100, 330619	330247	
	VI (EA_)	02/99-09/00	4G64 (GDI)	110	330020		330100, 330619	330247	
	VI Estate (EA_)	02/99-09/00	4G64 (GDI)	110	330020		330100, 330619	330247	
2.5	V (E5_A, E7_A, E8_A)	11/92-09/96	6G73	125		330701	330619		
2.5 V6 24V	VI (EA_)	09/96-09/00	6A13	120	330015		330100, 330619	330247	
	VI Estate (EA_)	09/96-09/00	6A13	120	330015		330100, 330619	330247	
2.5 V6-24 4x4	V (E5_A, E7_A, E8_A)	11/92-08/96	6G73	125	330015	330039, 330701	330100, 330619	330247	
	V Saloon (E5_A, E7_A, E8_A)	11/92-08/96	6G73	125	330015	330039, 330701	330100, 330619	330247	
GRANDIS			**11/97 -**						
2.0 DI-D	(NA_W)	09/05-	BSY	100	330325	330039	330546		
2.4	(NA_W)	04/04-	4G69	121	330015, 330539	330039	330619	330247	
2.4 GDi GLX		08/00-05/03	4G64 (GDI)	108	330020	330039	330100, 330619	330247	
		11/97-07/00	4G64 (GDI)	110	330020	330039	330100, 330619	330247	
2.4 GDi GLX 4WD		08/00-05/03	4G64 (GDI)	108	330020	330039	330100, 330619	330247	
		11/97-07/00	4G64 (GDI)	110	330020	330039	330100, 330619	330247	
L 200			**10/86 -**						
2.0	(K__T)	06/96-	4G63 (SOHC 8V)	90	330015	330081	330100, 330619		
2.4 4x4	(K__T)	06/96-	4G64 (8V)	97	330015	330081	330100, 330619		
2.5 D	(K__T)	11/86-08/96	4 D 56 (8V)	51	330015	330039		330247	

OPS Oil Pressure Switches **BLS** Brake Light Switches **TT-RF** Temperature Transmitter and Radiator Fan Switches **RLS** Reverse Light Switches **VAR** Various

ERA S.p.A. Moncalieri (TO) Italy - tel: +39 011 6891511 - fax: +39 011 6472862 - www.eranet.it

Vehicle		Date	Engine	kW	OPS	BLS	TT-RF	RLS	VAR
2.5 D	(K__T)	06/96-	4 D 56 (8V)	55	330015	330081	330100		
2.5 DI-D	(KB_T, KA_T)	11/05-	4 D 56 HP	100	330020		330100, 330619		
2.5 TD 4WD	(K__T)	09/01-	4 D 56 T	85	330015	330081	330100		
	(K__T)	08/03-	4 D 56 T	98	330020		330100, 330619		
2.5 TD 4x4	(K__T)	06/96-	4 D 56 TD	73	330015	330081	330100		
	(K__T)	11/01-	4 D 56 T	74	330020		330100, 330619		
L 300			**04/94 -**						
2.0	Flatbed / Chassis (P1_T)	06/94-04/00	4G63 (DOHC 16V)	83			330642		
	Flatbed / Chassis (P1_T)	07/94-	4G63 (DOHC 16V)	85	330015		330100, 330619, 330642		
2.5 D	Flatbed / Chassis (P1_T)	11/94-	4 D 56 T	64	330015				
L 400			**06/96 -**						
2.0	Box (PAOV)	06/96-10/02	4G63 (DOHC 16V)	83	330015		330100, 330619, 330642		
	Bus (PAOV)	09/95-10/02	4G63 (DOHC 16V)	83	330015		330100, 330619, 330642		
	Box (PAOV)	06/96-03/01	4G63 (SOHC 8V)	85	330015		330100, 330619, 330642		
2.4	Box (PAOV)	06/96-10/02	--	97	330015		330100, 330619		
	Bus (PAOV)	06/96-10/02	--	97	330015		330100, 330619		
2500 TD	Box (PAOV)	09/96-	4 D 56 T	64	330015		330667		
	Bus (PAOV)	06/96-	4 D 56 T	64	330015		330667		
2500 TD 4x4	Box (PAOV)	09/96-	4 D 56 T	64	330015		330667		
LANCER			**11/83 - 10/03**						
1.2	III (C1_A, C6_A)	08/86-04/88	4G16	44	330015	330039	330100	330247	
1.2 GL	IV Saloon (C6_A)	05/88-08/92	4G16	44	330015	330039	330100	330247	
1.3	IV (C6_A, C7_A)	05/88-06/90	G13B	44	330009, 330567	330039, 330081	330100, 330191	330247	
	IV (C6_A, C7_A)	05/88-06/90	G13B	51	330009, 330567	330039, 330081	330100, 330191	330247	
	IV Saloon (C6_A)	08/88-05/92	G13B	51	330009, 330567	330039, 330081	330100, 330191	330247	
1.3 12V	IV Saloon (C6_A)	07/90-06/92	4 G 13 (12V)	55	330009, 330567	330039	330100, 330191	330247	
	VI (CK/P_A)	12/95-08/03	4 G 13 (12V)	55	330015	330039	330619	330247	
1.3 GL	III Station Wagon (C1_V, C3_V)	05/88-06/90	G13B	50	330009, 330567	330039, 330081	330100, 330191	330247	
1.5	IV Saloon (C6_A)	04/88-05/92	4 G 15	62	330009, 330567	330039, 330081	330100, 330191, 330562	330247	
1.5 12V	III Station Wagon (C1_V, C3_V)	09/90-12/91	4G15 (12V)	66	330015	330039	330100, 330191, 330642	330247	
	IV (C6_A, C7_A)	05/89-05/92	4G15 (12V)	66	330009, 330567	330039	330100, 330191, 330642	330247	
	IV Saloon (C6_A)	05/89-05/92	4G15 (12V)	66	330009, 330567	330039	330100, 330191, 330642	330247	
1.5 16V	VI (CK/P_A)	12/95-08/03	4 G 15 (16V)	69	330015	330039	330100	330247	
1.5 GLS	IV Saloon (C6_A)	08/89-08/92	4G15 (12V)	63			330642		
1.6 16V	VI (CK/P_A)	12/95-08/03	4 G 92	66	330020	330039	330100, 330619	330247	
	IV (C6_A, C7_A)	06/92-05/94	4 G 92	83	330020	330039	330100, 330619	330247	

OPS Oil Pressure Switches **BLS** Brake Light Switches **TT-RF** Temperature Transmitter and Radiator Fan Switches **RLS** Reverse Light Switches **VAR** Various

Vehicle		Date	Engine	kW	OPS	BLS	TT-RF	RLS	VAR
1.6 16V	V (CB/D_A)	06/92-	4 G 92	83	330020	330039	330100, 330191, 330619	330247	
	V Station Wagon (CB_W, CD_W)	12/92-10/03	4 G 92	83	330020	330039	330100, 330191, 330619	330247	
1.6 16V 4WD	V (CB/D_A)	06/92-	4 G 92	83	330020	330039	330100, 330191, 330619	330247	
	V Station Wagon (CB_W, CD_W)	12/92-10/03	4 G 92	83	330020	330039	330100, 330191, 330619	330247	
1.6 GTi	IV (C6_A, C7_A)	05/88-05/90	4G61	91	330009, 330567	330039, 330081	330100, 330191, 330562	330247	
1.8 4x4	III Station Wagon (C1_V, C3_V)	03/89-12/90	4G37	63	330015	330039, 330081	330100, 330562	330247	
	III Station Wagon (C1_V, C3_V)	08/90-06/92	4G37	69	330015	330039, 330081	330100, 330562	330247	
	IV (C6_A, C7_A)	09/89-06/92	4G37	71	330015	330039, 330081	330100, 330562	330247	
1.8 16V	V (CB/D_A)	06/92-12/93	4G93	103	330015	330039	330100, 330619	330247	
1.8 D	III Station Wagon (C1_V, C3_V)	09/85-09/86	4 D 65	43	330015	330039, 330081		330247	
	III Station Wagon (C1_V, C3_V)	08/86-06/92	4 D 65	44	330015	330039, 330081		330247	
	IV (C6_A, C7_A)	04/88-05/92	4 D 65	44	330015	330039, 330081		330247	
1.8 Diesel	III (C1_A, C6_A)	01/84-09/86	4 D 65	43	330015	330039, 330081		330247	
	III (C1_A, C6_A)	09/86-04/88	4 D 65	44	330015	330039, 330081		330247	
1.8 GLX Diesel	IV Saloon (C6_A)	04/88-05/92	4 D 65	44	330015	330039, 330081		330247	
1.8 GTi	IV (C6_A, C7_A)	06/92-07/93	4G37	66	330015	330039, 330081	330100, 330562	330247	
	IV (C6_A, C7_A)	06/92-07/93	4G37	70	330015	330039, 330081	330100, 330562	330247	
	V (CB/D_A)	06/92-07/93	4G37	70	330015	330039, 330081	330100, 330562	330247	
1.8 GTi 16V	IV (C6_A, C7_A)	11/89-05/92	4G67	100	330015	330039, 330081	330100, 330562	330247	
	IV (C6_A, C7_A)	06/92-12/93	4G93	103	330015	330039	330100, 330619	330247	
2.0 16V EVO IV / V / VI / VII	VI (CK/P_A)	08/96-08/03	4 G 63 Turbo	206	330015	330039	330100, 330619	330247	
2.0 D	V Station Wagon (CB_W, CD_W)	12/92-10/03	4 D 68	50	330015	330039	330191	330247	
2.0 Diesel	V (CB/D_A)	06/92-	4 D 68	50	330015	330039	330191	330247	
OUTLANDER		**02/03 -**							
2.0	I (CU_)	05/03-	4G63 (DOHC 16V)	100	330015, 330539		330619	330247	
2.0 4WD	I (CU_)	05/03-	4G63 (DOHC 16V)	93	330015, 330539		330619	330247	
	I (CU_)	05/03-	4G63 (DOHC 16V)	100	330015, 330539		330619	330247	
	I (CU_)	05/03-	--	177	330015, 330539		330619	330247	
2.0 DI-D	II (CW_W)	02/07-	BSY	103	330325	330039, 330738	330546		
2.0 Turbo 4WD	I (CU_)	04/04-	4G63T (DOHC 16V)	148	330015, 330539		330619	330247	
2.2 DI-D 4WD	II (CW_W)	08/07-	4HK	115		330738			
2.4	II (CW_W)	11/06-	4B12	125		330738			
2.4 4WD	I (CU_)	05/03-	4G64 (SOHC 16V)	102	330015, 330539		330100, 330619		
	I (CU_)	11/03-	4G69	118	330015, 330539		330100, 330619		
	I (CU_)	05/03-	4G69	119	330015, 330539		330100, 330619		
2.4 HDD Mivec	I (CU_)	07/03-09/06	4G69	118	330015, 330539		330100, 330619		
2.4 Mivec 4WD	II (CW_W)	09/07-	4B12	125	330015, 330539	330738	330100, 330619		

OPS Oil Pressure Switches **BLS** Brake Light Switches **TT-RF** Temperature Transmitter and Radiator Fan Switches **RLS** Reverse Light Switches **VAR** Various

ERA S.p.A. Moncalieri (TO) Italy - tel: +39 011 6891511 - fax: +39 011 6472862 - www.eranet.it

Vehicle		Date	Engine	kW	OPS	BLS	TT-RF	RLS	VAR
3.0 4x4	II (CW_W)	11/06-	6B31	162		330738			
PAJERO			**12/82 -**						
2.3 TD	I Open Off-Road Vehicle (L04_G)	12/82-04/86	4 D 55 T	62	330015	330081			
2.4	II (V3_W, V2_W, V4_W)	04/91-04/00	4G64 (12V)	82	330015	330039, 330081, 330701	330100, 330642		
	II Open Off-Road Vehicle (V2_W, V4_W)	04/91-04/00	4G64 (12V)	82	330015	330039, 330081, 330701	330100, 330642		
	III (V60, V70)	10/01-	4G64 (12V)	82	330015	330039, 330081, 330701	330100, 330642		
2.4 2WD	III (V60, V70)	10/01-08/06	4G64 (12V)	82	330015	330039, 330081, 330701	330100, 330642		
2.5 TD	I Open Off-Road Vehicle (L04_G)	05/86-10/89	4 D 56 T	62	330015	330081, 330701			
	I (L04_G, L14_G)	01/90-12/91	4 D 56 T	64	330015	330081, 330701			
	I (L04_G, L14_G)	11/89-11/90	4 D 56 T	70	330015	330081, 330701			
	I Open Off-Road Vehicle (L04_G)	11/89-11/90	4 D 56 T	70	330015	330081, 330701			
	II Open Off-Road Vehicle (V2_W, V4_W)	12/90-04/00	4 D 56 TD	73	330015	330081, 330701			
2.5 TD 4x4	I (L04_G, L14_G)	10/86-05/91	4 D 56 T	62		330701			
	II (V3_W, V2_W, V4_W)	12/90-04/00	4 D 56 TD	73	330015	330081, 330701			
2.5 TDi	III (V60, V70)	04/00-	4 D 56 T	73	330015	330081, 330701	330100		
	III (V60, V70)	09/01-	4 D 56 T	85	330015	330081, 330701	330100		
2.6	I Open Off-Road Vehicle (L04_G)	01/83-11/90	4G54	76	330015	330081	330100, 330562		
2.8 TD	II (V3_W, V2_W, V4_W)	06/94-04/00	4M40-T	92	330009, 330567	330081, 330701	330667		
3.0 V6	I (L04_G, L14_G)	11/88-11/90	6G72	104	330015	330081, 330701	330100, 330562		
	II Open Off-Road Vehicle (V2_W, V4_W)	12/90-12/95	6G72	110	330015	330081, 330701	330100, 330562		
3.0 V6 24V	II (V3_W, V2_W, V4_W)	06/97-04/00	6G72 (DOHC 24V)	130	330015	330081, 330701	330619, 330642		
	II (V3_W, V2_W, V4_W)	06/94-05/97	6G72 (DOHC 24V)	133	330015	330081, 330701	330619, 330642		
	II Open Off-Road Vehicle (V2_W, V4_W)	06/94-04/00	6G72 (DOHC 24V)	133	330015	330081, 330701	330619, 330642		
3.0 V6 4x4	II (V3_W, V2_W, V4_W)	12/90-12/95	6G72	110	330015	330081, 330701	330100, 330562		
3.2 DI-D	III (V60, V70)	10/01-	4M41	118	330015	330039	330100		
	III (V60, V70)	04/00-10/01	4M41	121	330015	330039	330100		
3.5 V6 24V	II (V3_W, V2_W, V4_W)	07/97-04/00	6G74 (DOHC 24V)	143	330015	330081, 330701	330100, 330619, 330667		
	II (V3_W, V2_W, V4_W)	06/94-04/00	6G74 (DOHC 24V)	153	330015	330081, 330701	330100, 330619, 330667		
3.5 V6 GDI	III (V60, V70)	04/00-	6G74 (DOHC 24V)	149	330015	330081, 330701	330100, 330619, 330667		
3.8 V6	IV (V80, V90)	02/07-	6G75	184	330539		330619		
PAJERO CLASSIC			**06/02 -**						
2.5 TD	(V2_W)	07/02-	4 D 56 T	85	330015	330701	330100		
3.8	(V2_W)	09/06-	6G75	184	330539		330619		
PAJERO PININ			**03/99 -**						
1.8	(H6_W, H7_W)	11/01-	4G93	84	330020		330100, 330619		

OPS Oil Pressure Switches **BLS** Brake Light Switches **TT-RF** Temperature Transmitter and Radiator Fan Switches **RLS** Reverse Light Switches **VAR** Various

Vehicle		Date	Engine	kW	OPS	BLS	TT-RF	RLS	VAR
1.8 GDI	(H6_W, H7_W)	10/99-	4G93	88	330020		330100, 330619		
2.0 GDI	(H6_W, H7_W)	10/00-	4G94	95	330020		330100, 330619		
PAJERO SPORT		**11/97 -**							
2.5 TD	(K90)	11/98-	4 D 56 T	73	330015	330081, 330701	330100		
	(K90)	07/02-	4 D 56 T	85	330015	330081, 330701	330100		
	(K90)	08/03-	4 D 56 T	98	330015	330081, 330701	330100		
3.0 V6	(K90)	03/03-	6G72 (DOHC 24V)	123	330015	330039, 330081, 330701	330100, 330619		
	(K90)	06/00-	6G72 (DOHC 24V)	125	330015	330039, 330081, 330701	330100, 330619		
	(K90)	11/98-	6G72 (DOHC 24V)	130	330015	330039, 330081, 330701	330100, 330619		
SPACE GEAR		**05/95 - 05/00**							
2.0 16V	(PA/B/D_V/W)	08/96-05/00	4 G 63 (DOHC 16V)	83	330015		330100, 330619, 330642		
	(PA/B/D_V/W)	05/95-05/00	4 G 63 (DOHC 16V)	85	330015		330100, 330619, 330642		
2.4 i	(PA/B/D_V/W)	05/95-05/00	4G64 (8V)	97	330015		330100, 330619		
2.4 i 4x4	(PA/B/D_V/W)	05/95-05/00	4G64 (8V)	97	330015		330100, 330619		
2.5 TD	(PA/B/D_V/W)	05/95-05/00	4 D 56 T	64	330015		330667		
	(PA/B/D_V/W)	05/95-05/00	4 D 56 TD	73	330015		330667		
2.5 TD 4x4	(PA/B/D_V/W)	05/95-05/00	4 D 56 TD	73	330015		330667		
SPACE RUNNER		**10/91 -**							
1.8	(N1_W, N2_W)	06/96-08/99	4G93	85	330020	330039	330100, 330191, 330619, 330642	330247	
	(N1_W, N2_W)	10/91-08/99	4G93	90	330020	330039	330100, 330191, 330619, 330642	330247	
1.8 4x4	(N1_W, N2_W)	06/96-08/99	4G93	85	330020	330039	330100, 330191, 330619, 330642	330247	
	(N1_W, N2_W)	10/91-08/99	4G93	90	330020	330039	330100, 330191, 330619, 330642	330247	
2.0	(N50)	08/99-	4 G 63 (DOHC 16V)	100	330020				
2.0 TD	(N1_W, N2_W)	10/92-08/99	4 D 68 T	60	330015	330039	330100, 330191	330247	
2.4 GDI	(N50)	08/99-	4G64 (GDI)	110	330020				
SPACE STAR		**06/98 -**							
1.3 16V	(DG0)	09/00-	4 G 13 (16 V)	60	330015, 330340	330055	330100, 330619	330248	
	(DG0)	12/98-	4 G 13 (16 V)	61	330015, 330340	330055	330100, 330619	330248	
	(DG0)	06/98-	4 G 13 (16 V)	63	330015, 330340	330055	330100, 330619	330248	
1.6 16V	(DG0)	01/01-	4G18	72	330015, 330340	330055	330100, 330619	330248	
1.8 GDI	(DG0)	06/98-	4G93	87	330020, 330340	330039, 330055	330100, 330619	330247, 330248	
	(DG0)	06/98-	4G93	90	330020, 330340	330039, 330055	330100, 330619	330247, 330248	
1.8 MPI	(DG0)	10/02-	4G93	82	330020, 330340	330039, 330055	330100, 330619	330247, 330248	
1.9 DI-D	(DG0)	02/01-	F9Q1	75	330018	330701	330692	330240	
	(DG0)	10/02-	F9Q2	85	330018	330701	330692	330240	

OPS Oil Pressure Switches **BLS** Brake Light Switches **TT-RF** Temperature Transmitter and Radiator Fan Switches **RLS** Reverse Light Switches **VAR** Various

ERA S.p.A. Moncalieri (TO) Italy - tel: +39 011 6891511 - fax: +39 011 6472862 - www.eranet.it

Vehicle		Date	Engine	kW	OPS	BLS	TT-RF	RLS	VAR
SPACE WAGON			**05/91 -**						
1.8	(N3_W, N4_W)	10/91-10/98	4G93	90	330020	330081	330100, 330191, 330642	330247	
1.8 4x4	(N3_W, N4_W)	10/91-10/98	4G93	90	330020	330081	330100, 330191, 330642	330247	
1.8 TD	(N3_W, N4_W)	10/91-10/98	4 D 65 T	55	330009, 330567	330081	330191	330247	
2.0	(N3_W, N4_W)	10/92-10/98	4 G 63 (DOHC 16V)	98	330009, 330567	330081	330100, 330191, 330619	330247	
2.0 4x4	(N3_W, N4_W)	10/92-10/98	4 G 63 (DOHC 16V)	98	330009, 330567	330081	330100, 330191, 330619	330247	
2.0 TD	(N3_W, N4_W)	10/92-10/98	4D68 T	60	330009, 330567	330081	330191	330247	
2.4 GDI	(N5_W)	10/98-	4G64 (GDI)	110	330020	330081		330247	
2.4 GDI 4x4	(N5_W)	10/98-	4G64 (GDI)	110		330081		330247	
STARION			**05/82 - 06/90**						
2.0 Turbo ECi	(A18_A)	06/82-12/85	4 G 63 T (ECI)	125		330039, 330701	330562		
	(A18_A)	05/85-08/87	4 G 63 T/C	132		330039, 330701	330562		
2.6 Turbo ECi	(A18_A)	09/87-06/90	G 54 B T/C	114		330039, 330701	330562		
NISSAN									
100 NX			**03/90 - 01/96**						
1.6	(B13)	03/90-10/94	GA16DS	66	330359	330044	330098, 330655	330257	
1.6 SR	(B13)	09/93-10/94	GA16DE	75	330359	330044	330655	330257	
2.0	(B13)	10/90-10/94	SR20DE	110	330359	330044	330098, 330655	330257	
2.0 GTI	(B13)	03/91-10/94	SR20DE	105	330359	330044	330098, 330655	330257	
200 SX			**07/88 - 12/99**						
1.8 Turbo	(S13)	07/88-11/93	CA18DET	124	330359	330044	330098, 330655		
2.0 i 16V Turbo	(S14)	10/93-12/99	SR20DET	147	330359	330044	330655		
300 ZX			**01/84 - 12/97**						
3.0	(Z31)	01/84-12/87	VG30E	125		330044	330098		
3.0 Twin Turbo	(Z32)	05/90-09/95	VG30DETT	197		330044	330098, 330655		
	(Z32)	05/90-09/95	VG30DETT	208		330044	330098, 330655		
350 Z			**10/02 -**						
3.5	(Z33)	10/03-	VQ35DE	206		330711, 330719		330746, 330747	
	Roadster (Z33)	03/05-	VQ35DE	206		330711, 330719		330746, 330747	
	(Z33)	04/06-	VQ35DE	221		330711, 330719		330746, 330747	
	Roadster (Z33)	04/06-	VQ35DE	221		330711, 330719		330746, 330747	
	(Z33)	09/05-	VQ35HR	230		330719		330746, 330747	
	Roadster (Z33)	09/05-	VQ35HR	230		330719		330746, 330747	
370 Z			**04/09 -**						
3.7	(Z34)	06/09-	VQ37VHR	241	330697	330719		330746, 330747	
	(Z34)	06/09-	VQ37HR	243	330697	330719		330746, 330747	

OPS Oil Pressure Switches **BLS** Brake Light Switches **TT-RF** Temperature Transmitter and Radiator Fan Switches **RLS** Reverse Light Switches **VAR** Various

Vehicle		Date	Engine	kW	OPS	BLS	TT-RF	RLS	VAR
370 Z Roadster			**01/09 -**						
3.7	(Z34)	01/10-	VQ37VHR	241	330697	330719		330746, 330747	
ALMERA			**07/95 -**						
1.4	I (N15)	09/95-07/00	GA14DE	64	330359	330044		330254	
	I Hatchback (N15)	09/95-03/00	GA14DE	64	330359	330044		330254	
1.4 GX,LX	I (N15)	09/95-07/00	GA14DE	55	330359	330044		330254	
1.4 S,GX,LX	I Hatchback (N15)	09/95-03/00	GA14DE	55	330359	330044		330254	
1.5	II (N16)	07/00-	QG15DE	66	330359	330711	330112	330746, 330747	
	II Hatchback (N16)	03/00-	QG15DE	66	330359	330711	330112	330746, 330747	
	II (N16)	10/02-	QG15DE	72	330359	330711	330112	330746, 330747	
	II Hatchback (N16)	10/02-	QG15DE	72	330359	330711	330112	330746, 330747	
	II (N16)	03/01-	QG15DE	77	330359	330711	330112	330746, 330747	
1.5 dCi	II (N16)	01/03-	K9K 722	60	330027	330711	330112	330543, 330746	
	II Hatchback (N16)	01/03-	K9K 722	60	330027	330711	330112	330543, 330746	
1.5 XL	II Hatchback (N16)	03/01-	QG15DE	77	330359	330711	330112	330746, 330747	
1.6	I (N15)	09/95-07/00	GA16DE	73	330359	330044		330257	
	I Hatchback (N15)	09/95-03/00	GA16DE	73	330359	330044		330257	
1.6 SLX	I (N15)	09/95-07/00	GA16DE	66	330359	330044		330257	
1.6 SR,SLX	I Hatchback (N15)	09/95-03/00	GA16DE	66	330359	330044		330257	
1.8	II (N16)	07/00-	QG18DE	84	330359	330711	330112	330746, 330747	
	II Hatchback (N16)	01/00-	QG18DE	84	330359	330711	330112	330746, 330747	
	II (N16)	10/02-	QG18DE	85	330359	330711	330112	330746, 330747	
	II Hatchback (N16)	10/02-	QG18DE	85	330359	330711	330112	330746, 330747	
	II (N16)	01/02-	QG18DE	94		330711		330746, 330747	
	II Hatchback (N16)	08/02-	QG18DE	94	330359	330711	330112	330746, 330747	
2.0 D	I (N15)	11/95-07/00	CD20	55	330359	330044		330257	
	I Hatchback (N15)	11/95-03/00	CD20	55	330359	330044		330257	
2.0 GTi	I Hatchback (N15)	07/96-03/00	SR20DE	105	330359	330044		330257	
2.2 dCi	II (N16)	09/03-	YD22DDT	82	330359	330711	330112	330746	
	II Hatchback (N16)	09/03-	YD22DDT	82	330359	330711	330112	330746	
	II (N16)	09/03-	YD22DDTi	100	330359	330711	330112	330746	
	II Hatchback (N16)	09/03-	YD22DDTi	100	330359	330711	330112	330746	
2.2 Di	II (N16)	07/00-	YD22DDT	81	330359	330711	330112	330746	
	II Hatchback (N16)	03/00-	YD22DDT	81	330359	330711	330112	330746	
ALMERA TINO			**08/00 -**						
1.8	(V10)	08/00-	QG18DE	84	330359	330711	330112	330746, 330747	
	(V10)	12/02-	QG18DE	85	330359	330711	330112	330746, 330747	
2.0	(V10)	08/00-	SR20DE	100	330359	330711	330112		
2.2 dCi	(V10)	09/03-	YD22DDT	82	330359	330711	330112	330746	
	(V10)	09/03-	YD22DDTi	100	330359	330711	330112	330746	

OPS Oil Pressure Switches **BLS** Brake Light Switches **TT-RF** Temperature Transmitter and Radiator Fan Switches **RLS** Reverse Light Switches **VAR** Various

ERA S.p.A. Moncalieri (TO) Italy - tel: +39 011 6891511 - fax: +39 011 6472862 - www.eranet.it

Vehicle		Date	Engine	kW	OPS	BLS	TT-RF	RLS	VAR
2.2 Di	(V10)	08/00-	YD22DDTi	84	330359	330711	330112	330746	
BLUEBIRD			**11/83 - 11/92**						
1.6	(T72 , T12)	03/86-06/90	CA16S	61	330359	330044	330098, 330177	330254	
	Hatchback (T72, T12)	03/86-06/90	CA16S	61	330359	330044	330098, 330177	330254	
	(T72 , T12)	12/85-02/90	CA16S	66	330359	330044	330098, 330177	330254	
	(U11)	12/85-02/90	CA16S	66	330359	330044	330098, 330177	330254	
	Station Wagon (WU11)	12/85-02/90	CA16S	66	330359	330044	330098, 330177	330254	
1.8 i 16V	(T72 , T12)	02/89-12/90	CA18D	95	330359	330044	330098, 330177, 330655		
	Hatchback (T72, T12)	02/89-12/90	CA18D	95	330359	330044	330098, 330177, 330655		
1.8 Turbo	(T72 , T12)	12/85-05/90	CA18T	99	330359	330044	330098, 330177, 330655		
	(U11)	04/84-05/90	CA18T	99	330359	330044	330098, 330177, 330655		
	Hatchback (T72, T12)	12/85-05/90	CA18T	99	330359	330044	330098, 330177, 330655		
2.0	(T72 , T12)	12/85-12/87	CA20S	75	330359	330044	330098, 330177		
	Hatchback (T72, T12)	12/85-12/87	CA20S	75	330359	330044	330098, 330177		
	Station Wagon (WU11)	04/86-09/90	CA20S	75	330359	330044	330098, 330177		
2.0 D	Station Wagon (WU11)	04/84-01/88	LD20	43			330691		
	(T72 , T12)	03/86-12/90	LD20	49	330359	330044	330098, 330177, 330691		
	Hatchback (T72, T12)	03/86-12/90	LD20	49	330359	330044	330098, 330177, 330691		
	Station Wagon (WU11)	03/86-12/90	LD20	49	330359	330044	330098, 330177, 330691		
2.0 i	(T72 , T12)	12/85-12/90	CA20E	77	330359	330044	330098, 330177, 330655		
	(U11)	04/84-01/88	CA20E	77	330359	330044	330098, 330177, 330655		
	Hatchback (T72, T12)	12/85-12/90	CA20E	77	330359	330044	330098, 330177, 330655		
	Station Wagon (WU11)	04/84-12/90	CA20E	77	330359	330044	330098, 330177, 330655		
	Station Wagon (WU11)	09/88-09/90	CA20E	85			330655		
CABSTAR			**07/92 - 05/94**						
2.0	Flatbed / Chassis (F23)	07/92-05/94	Z20S	66	330359	330044	330098		
	Pickup	07/92-05/94	--	66	330359	330044	330098		
CUBE			**03/10 -**						
1.5 dCi	(Z12)	03/10-	--	78	330698	330711	330558		
1.6 16V	(Z12)	03/10-	HR 16 DE	81	330697	330711, 330719			
GT-R			**02/09 -**						
3.8 V6	(R35)	02/09-	VR38DETT	357		330719			

OPS Oil Pressure Switches **BLS** Brake Light Switches **TT-RF** Temperature Transmitter and Radiator Fan Switches **RLS** Reverse Light Switches **VAR** Various

Vehicle		Date	Engine	kW	OPS	BLS	TT-RF	RLS	VAR
INTERSTAR			**07/02 -**						
dCi 100	Box (X70)	11/03-	--	73	330630, 330698	330707, 330708	330692		
	Bus (X70)	11/03-	--	73	330630, 330698	330707, 330708	330692		
	Flatbed / Chassis	02/04-	--	73	330630, 330698	330707, 330708	330692		
	Box (X70)	04/06-	G9U 720	74	330630, 330698	330707, 330708	330692		
	Bus (X70)	04/06-	--	74	330630, 330698	330707, 330708	330692		
dCi 120	Box (X70)	07/02-	G9U 720	84	330340, 330630, 330698	330707, 330708	330692	330248	
	Bus (X70)	07/02-	G9U 720	84	330340, 330630, 330698	330707, 330708	330692	330248	
	Flatbed / Chassis	08/03-	G9U 720	84	330340, 330630, 330698	330707, 330708	330692	330248	
	Box (X70)	09/06-	G9U 650	88	330340, 330630, 330698	330707, 330708	330558, 330692	330248	
	Bus (X70)	09/06-	G9U 650	88	330340, 330630, 330698	330707, 330708	330558, 330692	330248	
	Flatbed / Chassis	08/06-	--	88	330340, 330630, 330698	330707, 330708	330558, 330692	330248	
dCi 140	Box (X70)	11/03-	ZD30	100	330340, 330697	330707, 330708		330248	
	Bus (X70)	11/03-	ZD30	100	330340, 330697	330707, 330708		330248	
	Flatbed / Chassis	11/03-	ZD30	100	330340, 330697	330707, 330708		330248	
dCi 150	Box (X70)	09/06-	G9U 632	107	330340, 330698	330707, 330708	330558, 330692	330248	
	Bus (X70)	09/06-	G9U 632	107	330340, 330698	330707, 330708	330558, 330692	330248	
	Flatbed / Chassis	08/06-	--	107	330340, 330698	330707, 330708	330558, 330692	330248	
dCi 80	Box (X70)	07/02-	F9Q 772	60	330018, 330340	330707, 330708	330692	330248	
	Bus (X70)	07/02-	F9Q 772	60	330018, 330340	330707, 330708	330692	330248	
dCI 90	Box (X70)	07/02-	G9T 722	66	330340, 330630, 330698	330707, 330708	330692	330248	
	Bus (X70)	07/02-	G9T 722	66	330340, 330630, 330698	330707, 330708	330692	330248	
JUKE			**06/10 -**						
1.5 dCi		06/10-	--	81	330698	330711	330558		
1.6		06/10-	HR 16 DE	86		330711, 330719			
1.6 DIG-T		06/10-	MR16DDT	140		330711			
1.6 DIG-T 4x4		06/10-	MR16DDT	140		330711			
KUBISTAR			**08/03 -**						
1.2	(X76)	08/03-	D7F 764	44	330027, 330340	330510, 330707, 330708, 330717, 330728	330138	330248, 330750	
	Box	08/03-	D7F 764	44		330707, 330708, 330717, 330728		330750	
1.2 16V	(X76)	04/06-	D4F 712	55	330027, 330340	330510, 330707, 330708, 330717, 330728	330138	330248, 330750	
	Box	04/06-	D4F 712	55		330707, 330708, 330717, 330728		330750	

OPS Oil Pressure Switches **BLS** Brake Light Switches **TT-RF** Temperature Transmitter and Radiator Fan Switches **RLS** Reverse Light Switches **VAR** Various

ERA S.p.A. Moncalieri (TO) Italy - tel: +39 011 6891511 - fax: +39 011 6472862 - www.eranet.it

Vehicle		Date	Engine	kW	OPS	BLS	TT-RF	RLS	VAR
1.5 dCi	(X76)	08/03-	K9K 710	42	330018, 330340, 330630, 330698	330510, 330707, 330708, 330717, 330728	330692	330248, 330750	
	(X76)	08/05-	K9K 710	45	330018, 330340, 330630, 330698	330510, 330707, 330708, 330717, 330728	330692	330248, 330750	
	(X76)	08/03-	K9K 704	48	330018, 330340, 330630, 330698	330510, 330707, 330708, 330717, 330728	330692	330248, 330750	
	Box	08/03-	K9K 704	48	330630, 330698	330707, 330708, 330717, 330728	330692	330750	
	(X76)	08/03-	K9K 722	60	330018, 330340, 330630, 330698	330510, 330707, 330708, 330717, 330728	330692	330248, 330750	
	Box	08/03-	K9K 722	60	330630, 330698	330707, 330708, 330717, 330728	330692	330750	
1.5 dCi 70	(X76)	04/06-	K9K 700	50	330018, 330340, 330630, 330698	330510, 330707, 330708, 330717, 330728	330692	330248, 330750	
1.5 dCi 85	(X76)	04/06-	K9K 276	62	330018, 330340, 330630, 330698	330510, 330707, 330708, 330717, 330728	330692	330248, 330750	
1.6 16V	(X76)	08/03-	K4M 752	70	330340, 330630	330510, 330707, 330708, 330717, 330728	330138	330248, 330750	
	Box	08/03-	K4M 752	70	330630	330707, 330708, 330717, 330728		330750	
LAUREL			**11/84 - 06/90**						
2.4	(JC32)	01/85-12/87	L24E, L24S	94	330007	330044	330655, 330691		
2.8 D	(JC32)	01/85-12/87	LD28	62		330044	330691		
	(JC32)	01/85-12/89	RD28	66			330691		
MAXIMA			**10/88 -**						
2.0 QX	Station Wagon	10/97-	VQ20DE	103	330359				
3.0 i	(J30)	10/88-06/94	VG30E	125	330359	330044	330098		
MAXIMA QX			**04/99 - 11/03**						
2.0 V6 24V	(A33)	03/00-	VQ20DE	103	330359	330711			
3.0 V6 24V	(A33)	03/00-	VQ30DE	147	330359	330711			
MICRA			**01/92 - 05/10**						
1.0 16V	III (K12)	01/03-	CG10DE	48	330359	330711, 330719		330543	
1.0 i 16V	II (K11)	08/92-09/00	CG10DE	40	330359	330711	330112	330254, 330533, 330746, 330747	
	II (K11)	09/00-02/03	CG10DE	44	330359	330711	330112	330746, 330747	
1.2 16V	III (K12)	01/03-	CR12DE	48	330359	330711, 330719		330543	
	III (K12)	01/03-	CR12DE	59	330359	330711, 330719		330543	
1.3 i 16V	II (K11)	08/92-09/00	CG13DE	55	330359		330112	330254, 330533	
1.4 16V	III (K12)	01/03-	CR14DE	65	330359	330711, 330719		330543	
1.4 i 16V	II (K11)	09/00-02/03	CGA3DE	60	330359	330711	330112	330746, 330747	

OPS Oil Pressure Switches **BLS** Brake Light Switches **TT-RF** Temperature Transmitter and Radiator Fan Switches **RLS** Reverse Light Switches **VAR** Various

Vehicle		Date	Engine	kW	OPS	BLS	TT-RF	RLS	VAR
1.5 D	II (K11)	02/98-02/03	TD15	42	330023, 330026	330711	330134	330249, 330513, 330533	
1.5 dCi	III (K12)	01/03-	K9K 704	48	330027, 330630, 330698	330711, 330719	330692	330543	
	III (K12)	06/05-	--	50	330698		330692	330543	
	III (K12)	09/03-	K9K 722	60	330027, 330630, 330698	330711, 330719	330692	330543	
	III (K12)	06/05-	K9K 276	63	330698		330558, 330692	330543	
160 SR	III (K12)	05/05-	HR 16 DE	81	330697	330711, 330719		330543	
MICRA C+C			**08/05 -**						
1.4 16V	(K12)	08/05-	CR14DE	65	330359	330711, 330719		330543	
1.6 160 SR	(K12)	08/05-	HR 16 DE	81	330697	330711, 330719		330543	
MURANO			**03/05 -**						
3.5	(Z51)	11/07-	VQ35DE	195	330697	330719			
3.5 4x4	(Z50)	03/05-	VQ35DE	172	330359	330711			
	(Z51)	10/08-	VQ35DE	188	330697	330719			
	(Z51)	11/07-	VQ35DE	195	330697	330719			
NAVARA			**03/97 -**						
2.5 dCi	(D40)	07/05-	YD25DDTi	106	330359	330711, 330719			
	(D40)	12/05-	YD25DDTi	128		330711, 330719			
2.5 dCi 4WD	Flatbed / Chassis (D40)	08/08-	--	106		330711, 330719			
	(D40)	10/06-	YD25DDTi	126	330359	330711, 330719			
	Flatbed / Chassis (D40)	08/08-	YD25DDTi	126		330711, 330719			
	(D40)	07/05-	YD25DDTi	128	330359	330711, 330719			
2.5 Di	Flatbed / Chassis (D22)	01/08-	YD25DDTi	98		330711, 330719			
2.5 Di 4WD	Flatbed / Chassis (D22)	01/08-	YD25DDTi	98		330711, 330719			
NOTE			**03/06 -**						
1.4	(E11)	03/06-	CR14DE	65	330359	330711		330543	
1.5 dCi	(E11)	03/06-	K9K 700	50	330698		330558, 330692	330543	
	(E11)	03/06-	K9K 276	63	330698		330558, 330692	330543	
	(E11)	07/08-	K9K 292	76	330698		330558, 330692		
1.6	(E11)	03/06-	HR 16 DE	81	330697	330711, 330719		330543	
NV200			**02/10 -**						
1.5 dci	Box	02/10-	--	63	330698		330558		
1.6 16V	Box	02/10-	HR 16 DE	81	330697	330711			
NV200 EVALIA			**07/10 -**						
1.5 dci		07/10-	--	63	330698		330558		
1.6 16V		07/10-	HR 16 DE	81	330697	330711			

OPS Oil Pressure Switches **BLS** Brake Light Switches **TT-RF** Temperature Transmitter and Radiator Fan Switches **RLS** Reverse Light Switches **VAR** Various

ERA S.p.A. Moncalieri (TO) Italy - tel: +39 011 6891511 - fax: +39 011 6472862 - www.eranet.it

Vehicle		Date	Engine	kW	OPS	BLS	TT-RF	RLS	VAR
PATHFINDER			**12/89 -**						
2.5 dCi	(R51)	01/05-	YD25DDTi	128	330359	330711, 330719			
2.5 dCi 4WD	(R51)	10/06-	YD25DDTi	126	330359	330711, 330719			
	(R51)	03/05-	YD25DDTi	128	330359	330711, 330719			
3.0 All-wheel Drive		12/89-07/90	VG30E	95			330655		
3.0 dCi	(R51)	08/10-	--	170	330698	330719	330558		
3.3 V6 4WD	(R50)	03/98-10/00	VG33E	110	330359	330044			
	(R50)	09/97-12/04	VG33E	125	330359	330044			
3.5 V6 4WD	(R50)	11/00-12/04	VQ35	162	330359, 330697	330044, 330719			
4.0	(R51)	01/05-	VQ40DE	198	330697	330719			
4.0 4WD	(R51)	09/05-	VQ40DE	198	330697	330719			
PATROL			**08/88 - 11/95**						
2.8 TD	Station Wagon (W260)	06/89-11/95	RD28T	85			330691		
PATROL GR			**08/87 -**						
2.8 TD	I (Y60, GR)	09/88-06/97	RD28T	85		330044	330098, 330691		
	II (Y61)	06/97-05/00	RD28Ti	95	330359	330044			
3.0 DTi	II (Y61)	05/00-	ZD30DDTi	116	330359, 330697	330044			
	II (Y61)	05/00-	ZD30DDTi	118	330359, 330697	330044			
4.2 CAT	I (Y60, GR)	11/88-06/97	TB42E	121	330359	330044	330098, 330655		
4.8	II (Y61)	03/00-	TB48DE	180	330697	330044			
PICK UP			**01/97 -**						
2.4	(D22)	11/01-04/05	KA24DE	98	330697				
2.4 i	(D22)	02/98-	KA24E	88	330359	330044			
2.4 i 4WD	(D22)	02/98-	KA24E	88	330359	330044			
	(D22)	03/02-	KA24DE	98	330697	330044			
2.5 D	(D22)	02/98-	TD25	61	330359	330044			
2.5 D 4WD	(D22)	02/98-	TD25	61	330359	330044			
2.5 Di	(D22)	03/02-	YD25DDTi	98	330697	330044			
2.5 Di 4WD	(D22)	03/02-	YD25DDTi	98	330697	330044			
2.5 TD 4WD	(D22)	05/98-	TD25TI	76	330359	330044			
PIXO			**03/09 -**						
1.0	(UA0)	06/09-	K10 B	50				330745	
PRAIRIE PRO			**10/88 - 07/94**						
2.4 i	(M11)	04/92-07/94	KA24E	98	330359	330044	330098, 330655		
2.4 i 4x4	(M11)	04/92-07/94	KA24E	98	330359	330044	330098, 330655		
PRIMASTAR			**09/02 -**						
2.0	Box (X83)	02/03-	F4R 720	88	330018, 330340, 330630, 330698	330510, 330707, 330708, 330728	330138	330248	

OPS Oil Pressure Switches **BLS** Brake Light Switches **TT-RF** Temperature Transmitter and Radiator Fan Switches **RLS** Reverse Light Switches **VAR** Various

Vehicle		Date	Engine	kW	OPS	BLS	TT-RF	RLS	VAR
2.0	Bus (X83)	03/01-	F4R 720, F4R 722	88	330018, 330340, 330630, 330698	330510, 330707, 330708, 330728	330138	330248	
dCi 100	Box (X83)	09/02-	F9Q 760	74	330340, 330630, 330698	330707, 330708, 330728	330692	330248	
	Bus (X83)	03/01-	F9Q 760	74	330340, 330630, 330698	330510, 330707, 330708, 330728	330692	330248	
dCi 120	Box (X83)	09/06-	M9R 780	84	330340, 330630, 330698	330510, 330707, 330708, 330728	330558	330248	
	Bus (X83)	09/06-	M9R 780	84	330340, 330630, 330698	330510, 330707, 330708, 330728	330558	330248	
dCi 140	Box (X83)	07/03-	G9U 730	99	330340, 330630, 330698	330707, 330708, 330728	330558, 330692	330248	
	Bus (X83)	07/03-	G9U 730	99	330340, 330630, 330698	330510, 330707, 330708, 330728	330558, 330692	330248	
dCi 150	Box (X83)	09/06-	G9U 632	107	330340, 330630, 330698	330510, 330707, 330708, 330728	330558, 330692	330248	
	Bus (X83)	09/06-	G9U 632	107	330340, 330630, 330698	330510, 330707, 330708, 330728	330558, 330692	330248	
dCi 80	Box (X83)	09/02-	F9Q 762	60	330340, 330630, 330698	330707, 330708, 330728	330692	330248	
	Bus (X83)	03/01-	F9Q 762	60	330340, 330630, 330698	330510, 330707, 330708, 330728	330692	330248	
dCi 90	Box (X83)	09/06-	M9R 782	66	330340, 330698	330510, 330707, 330708, 330728	330558	330248	
	Bus (X83)	09/06-	M9R 782	66	330340, 330698	330510, 330707, 330708, 330728	330558	330248	
PRIMERA		**06/90 -**							
1.6	(P10)	06/90-01/96	GA16DS	66	330359		330655	330257, 330533	
	Hatchback (P10)	06/90-01/96	GA16DS	66	330359		330655	330257, 330533	
	(P10)	06/93-01/96	GA16DE	75			330112	330257, 330533	
	Hatchback (P10)	06/93-01/96	GA16DE	75			330112	330257, 330533	
	(P12)	03/02-	QG16DE	78	330359, 330697	330711		330746, 330747	
	Hatchback (P12)	07/02-	QG16DE	78	330359, 330697	330711		330746, 330747	
	(P12)	01/02-	QG16DE	80	330359, 330697	330711		330746, 330747	
	Hatchback (P12)	07/02-	QG16DE	80	330359, 330697	330711		330746, 330747	
1.6 16V	(P11)	09/96-12/01	GA16DE	66	330359	330711	330112	330257, 330533	
	Hatchback (P11)	09/96-07/02	GA16DE	66	330359	330711	330112	330257, 330533	
	Traveller (WP11)	04/98-12/01	GA16DE	66	330359	330711	330112	330257, 330533	
	(P11)	09/96-10/00	GA16DE	73	330359	330711	330112	330257, 330533	
	Hatchback (P11)	09/96-07/02	GA16DE	73	330359	330711	330112	330257, 330533	
	Traveller (WP11)	04/98-12/01	GA16DE	73	330359	330711	330112	330257, 330533	
	(P11)	06/96-12/01	QG16DE	78	330359	330711	330112	330746, 330747	
	Hatchback (P11)	09/00-07/02	QG16DE	78	330359	330711	330112	330746, 330747	
1.6 i	Traveller (W10)	07/90-03/98	GA16DS	66	330359	330044	330098, 330655	330257	
	Traveller (W10)	03/94-03/98	GA16DE	75	330359	330044	330655	330257	
1.6 Visia	Estate (WP12)	01/02-	QG16DE	80	330359, 330697	330711		330746, 330747	
1.8	(P12)	03/02-	QG18DE	85	330359, 330697	330711		330746, 330747	
	Estate (WP12)	03/02-	QG18DE	85	330359, 330697	330711		330746, 330747	

OPS Oil Pressure Switches **BLS** Brake Light Switches **TT-RF** Temperature Transmitter and Radiator Fan Switches **RLS** Reverse Light Switches **VAR** Various

ERA S.p.A. Moncalieri (TO) Italy - tel: +39 011 6891511 - fax: +39 011 6472862 - www.eranet.it

Vehicle		Date	Engine	kW	OPS	BLS	TT-RF	RLS	VAR
1.8	Hatchback (P12)	07/02-	QG18DE	85	330359, 330697	330711		330746, 330747	
1.8 16V	(P11)	08/99-12/01	QG18DE	84	330359	330711	330112	330746, 330747	
	Hatchback (P11)	08/99-07/02	QG18DE	84	330359	330711	330112	330746, 330747	
	Traveller (WP11)	08/99-12/01	QG18DE	84	330359	330711	330112	330746, 330747	
1.9 dCi	(P12)	08/02-	--	85		330711	330692	330746	
	Estate (WP12)	08/02-	--	85		330711	330692	330746	
	Hatchback (P12)	08/02-	--	85		330711	330692	330746	
	(P12)	04/03-	--	88	330630	330711	330692	330746	
	Estate (WP12)	04/03-	--	88	330630	330711	330692	330746	
	Hatchback (P12)	04/03-	--	88	330630	330711	330692	330746	
2.0	(P12)	03/02-	QR20DE	103	330697	330711		330746, 330747	
	Estate (WP12)	03/02-	QR20DE	103	330697	330711		330746, 330747	
	Hatchback (P12)	07/02-	QR20DE	103	330697	330711		330746, 330747	
	(P10)	06/90-04/93	SR20DE	105			330112, 330655	330254, 330257, 330533	
	Traveller (W10)	07/94-01/98	SR20DE	110	330359		330655		
2.0 16V	(P10)	06/90-01/96	SR20DI	85			330653, 330655	330254, 330257, 330533	
	(P11)	09/96-12/01	SR20De	85	330359	330711	330112	330533, 330746, 330747	
	Hatchback (P10)	06/90-01/96	SR20DI	85			330653, 330655	330254, 330257, 330533	
	Hatchback (P11)	09/96-07/02	SR20De	85	330359	330711	330112	330533, 330746, 330747	
	Traveller (WP11)	04/98-12/01	SR20De	85	330359	330711	330112	330533, 330746, 330747	
	(P11)	09/96-12/01	SR20DE	96	330359	330711	330112, 330653	330533, 330746, 330747	
	Hatchback (P11)	09/96-07/02	SR20DE	96	330359	330711	330112, 330653	330533, 330746, 330747	
	Traveller (WP11)	04/98-12/01	SR20DE	96	330359	330711	330112	330533, 330746, 330747	
	(P11)	08/99-12/01	SR20DE	103	330359	330711	330112, 330653	330533, 330746, 330747	
	Hatchback (P11)	08/99-07/02	SR20DE	103	330359	330711	330112, 330653	330533, 330746, 330747	
	Traveller (WP11)	08/99-12/01	SR20DE	103	330359	330711	330112	330533, 330746, 330747	
	(P11)	09/96-12/01	SR20DE	110	330359	330711	330112, 330653	330533, 330746, 330747	
	Hatchback (P11)	09/96-07/02	SR20DE	110	330359	330711	330112, 330653	330533, 330746, 330747	
2.0 16V 4x4	(P10)	04/91-06/96	SR20DI	85			330653, 330655	330254, 330257, 330533	
	Hatchback (P10)	04/91-06/96	SR20DI	85			330653, 330655	330254, 330257, 330533	
2.0 D	(P10)	01/91-01/96	CD20	55	330007, 330359	330044	330098, 330112, 330691	330257	
	Hatchback (P10)	01/91-01/96	CD20	55	330007	330044	330098, 330112, 330691	330257	

OPS Oil Pressure Switches **BLS** Brake Light Switches **TT-RF** Temperature Transmitter and Radiator Fan Switches **RLS** Reverse Light Switches **VAR** Various

Vehicle		Date	Engine	kW	OPS	BLS	TT-RF	RLS	VAR
2.0 D	Traveller (W10)	07/90-12/95	CD20	55	330007	330044	330098, 330112, 330691	330257	
2.0 GT	(P10)	06/90-01/96	SR20DE	110			330112, 330653, 330655	330254, 330257, 330533	
2.0 GT 4x4	(P10)	03/91-04/93	SR20DE	105			330112, 330655	330254, 330257, 330533	
	Hatchback (P10)	03/91-04/93	SR20DE	105			330655		
2.0 i	Traveller (W10)	07/90-03/98	SR20DI	85	330359	330044	330098, 330653, 330655	330257	
	(P10)	01/95-06/96	SR20DE	92			330112, 330653	330257, 330533	
	Hatchback (P10)	01/95-06/96	SR20DE	92			330112, 330653	330257, 330533	
2.0 TD	(P11)	09/96-12/01	CD20T	66	330359	330711	330112	330533	
	Hatchback (P11)	09/96-07/02	CD20T	66	330359	330711	330112	330533	
	Traveller (WP11)	04/98-12/01	CD20T	66	330359	330711	330112	330533	
2.2 dCi	(P12)	04/03-	YD22DDT	102	330359	330711		330746, 330747	
	Estate (WP12)	04/03-	YD22DDT	102	330359	330711		330746, 330747	
	Hatchback (P12)	04/03-	YD22DDT	102	330359	330711		330746, 330747	
2.2 Di	(P12)	03/02-	YD22DDT	93	330359, 330697	330711		330746, 330747	
	Estate (WP12)	03/02-	YD22DDT	93	330359, 330697	330711		330746, 330747	
	Hatchback (P12)	07/02-	YD22DDT	93	330359, 330697	330711		330746, 330747	
QASHQAI			**02/07 -**						
1.5 dCi	(J10, JJ10)	07/08-	--	76	330698		330558, 330692		
	(J10, JJ10)	02/07-	--	78	330698		330558, 330692	330543	
1.6	(J10, JJ10)	02/07-	HR 16 DE	84	330697	330711, 330719		330543	
2.0	(J10, JJ10)	02/07-	MR20DE	103	330697	330711, 330719		330543, 330746, 330747	
2.0 All-wheel Drive	(J10, JJ10)	02/07-	MR20DE	103	330697	330711, 330719		330543, 330746, 330747	
2.0 dCi	(J10, JJ10)	02/07-	M1D	110	330359	330711	330558	330746, 330747	
2.0 dCi All-wheel Drive	(J10, JJ10)	02/07-	M1D	110	330359	330711	330558	330746, 330747	
SERENA			**07/92 -**						
1.6 16V	(C23M)	02/93-	GA16DE	71	330359	330044			
2.0 16V	(C23M)	11/92-	SR20DE	93	330359	330044			
2.0 D	(C23M)	11/92-	LD20	49	330359	330044			
2.3 D	(C23M)	01/95-	LD23	55	330359	330044			
SUNNY			**01/86 - 03/00**						
1.3	II (N13)	07/86-10/91	E13S	44	330359	330044			
	II Hatchback (N13)	06/86-10/88	E13S	44	330359	330044			
1.4	III (N14)	10/90-06/95	GA14DS	60	330359	330044	330098, 330655	330254	
	III Hatchback (N14)	10/90-06/95	GA14DS	60			330655		
	III Liftback (N14)	10/90-06/95	GA14DS	60			330655		
1.4 i	III (N14)	10/90-05/95	GA14DE, GA14DS	55	330359	330044	330098, 330655	330254	
	III Hatchback (N14)	10/90-05/95	GA14DE, GA14DS	55	330359	330044	330098, 330655	330254	

OPS Oil Pressure Switches **BLS** Brake Light Switches **TT-RF** Temperature Transmitter and Radiator Fan Switches **RLS** Reverse Light Switches **VAR** Various

ERA S.p.A. Moncalieri (TO) Italy - tel: +39 011 6891511 - fax: +39 011 6472862 - www.eranet.it

Vehicle		Date	Engine	kW	OPS	BLS	TT-RF	RLS	VAR
1.4 i	III Liftback (N14)	10/90-05/95	GA14DE, GA14DS	55	330359	330044	330098, 330655	330254	
1.4 LX	II (N13)	10/88-08/91	GA14S	55	330359	330044			
	II Hatchback (N13)	01/89-08/91	GA14S	55	330359	330044			
1.5	II (N13)	06/86-10/88	E15S	52	330359	330044			
	II Coupe (B12)	06/86-10/88	E15S	52	330359	330044			
	II Hatchback (N13)	06/86-10/88	E15S	52	330359	330044			
	II Traveller (B12)	06/86-10/88	E15S	52	330359	330044			
1.6	II (N13)	06/86-10/88	E16S	62	330359	330044			
	II Hatchback (N13)	06/86-10/88	E16S	62	330359	330044			
1.6 4x4	II (N13)	07/86-10/88	GA16S	66	330359	330044			
1.6 16V 4x4	III Traveller (Y10)	11/90-05/95	GA16DS	66	330359	330044	330098, 330655	330257	
1.6 i	II (N13)	06/86-10/90	E16i	54	330359	330044	330691		
	II Hatchback (N13)	06/86-10/90	E16i	54	330359	330044	330691		
	III (N14)	10/90-05/95	GA16DE, GA16DS	66	330359	330044	330098, 330655	330257	
	III Hatchback (N14)	10/90-05/95	GA16DE, GA16DS	66	330359	330044	330098, 330655	330257	
	III Liftback (N14)	10/90-05/95	GA16DE, GA16DS	66	330359	330044	330098, 330655	330257	
	III Traveller (Y10)	06/91-03/00	GA16DE, GA16DS	66	330359	330044	330098, 330655	330257	
1.6 i 12V	II (N13)	10/88-06/91	GA16i	66	330359	330044			
	II Hatchback (N13)	06/86-10/90	GA16i	66	330359	330044			
1.6 i 16V	Box (Y10)	10/92-03/00	GA16DE	66	330359	330044	330655	330257	
	III (N14)	10/92-05/95	GA16DE	75		330044	330655	330257	
	III Hatchback (N14)	10/92-05/95	GA16DE	75		330044	330655	330257	
	III Liftback (N14)	10/92-05/95	GA16DE	75		330044	330655	330257	
1.6 i 16V 4WD	III (N14)	10/90-05/95	GA16DS	66	330359	330044	330098, 330655	330257	
1.6 i 16V 4x4	III Hatchback (N14)	10/92-05/95	GA16DE	75		330044	330655	330257	
	III Traveller (Y10)	10/92-03/00	GA16DE	75	330359	330044		330257	
1.6 i 4x4	II (N13)	06/86-10/90	E16i	54	330359	330044	330691		
1.6 SR 4x4	III (N14)	01/92-06/95	GA16DEL	66		330044			
1.7 D	Box (Y10)	11/90-03/00	CD17	40	330359	330044	330098, 330691	330257	
	II (N13)	06/86-05/89	CD17	40	330359	330044	330691		
	II Hatchback (N13)	06/86-01/91	CD17	40	330359	330044	330691		
1.8 GTI 16V	II Hatchback (N13)	01/89-06/91	CA18D	92	330359	330044	330655		
2.0 D	III (N14)	10/90-05/95	CD20	55		330044	330098, 330691	330257	
	III Hatchback (N14)	10/90-05/95	CD20	55		330044	330098, 330691	330257	
	III Liftback (N14)	10/90-05/95	CD20	55		330044	330098, 330691	330257	
	III Traveller (Y10)	06/91-03/00	CD20	55	330359	330044	330098, 330691	330257	
2.0 GTI 16V	III Hatchback (N14)	10/90-05/95	SR20DE	105		330044	330098, 330655	330257	
2.0 GTI-R 4x4	III Hatchback (N14)	10/90-05/95	SR20DET	162	330359	330044	330098, 330655		
TEANA		**10/03 -**							
2.0	I (J31)	10/03-06/08	QR20DE	103	330697	330719			

OPS Oil Pressure Switches **BLS** Brake Light Switches **TT-RF** Temperature Transmitter and Radiator Fan Switches **RLS** Reverse Light Switches **VAR** Various

Vehicle		Date	Engine	kW	OPS	BLS	TT-RF	RLS	VAR
2.3	I (J31)	10/03-06/08	VQ23DE	127		330719			
2.5	II (J32)	07/08-	VQ25DE	134	330697	330719			
3.5	I (J31)	10/03-06/08	VQ35DE	170		330719			
	II (J32)	07/08-	VQ35DE	183	330697	330719			
TERRANO			**07/86 -**						
2.4 4WD	II (R20)	05/96-01/02	KA24E	85	330359	330044	330112, 330655		
	II (R20)	05/96-	KA24E	87	330359	330044	330112, 330655		
2.4 i 12V 4WD	II (R20)	02/93-06/96	KA24E	91	330359	330044	330655		
2.4 i 4WD	I (WD21)	10/87-02/93	Z24i	76	330359	330044	330098		
2.7 TD 4WD	II (R20)	02/93-01/02	TD27T	74	330359	330044	330112, 330691		
2.7 TDi 4WD	II (R20)	05/96-	TD27TI	92	330359	330044	330112		
3.0 All-wheel Drive	I (WD21)	07/86-08/89	VG30I	95	330359	330044	330098	330254	
3.0 Di 4WD	II (R20)	05/02-	ZD30	113	330359	330044	330112		
3.0 i 4WD	I (WD21)	01/90-12/95	VG30E	109	330359	330044	330098, 330655		
3.5 4WD	II (R20)	10/94-06/03	VQ35DE	177	330697	330719			
TIIDA			**05/04 -**						
1.5 dCi	Hatchback (C11X)	09/07-	K9K 728	78	330698		330558, 330692	330543	
	Saloon (SC11X)	09/07-	--	78	330698		330558, 330692	330543	
1.6	Hatchback	05/04-02/07	HR 16 DE	81	330697	330711, 330719		330543	
	Hatchback (C11X)	09/07-	HR 16 DE	81	330697	330711, 330719		330543	
	Saloon (SC11X)	09/07-	HR 16 DE	81	330697	330711, 330719		330543	
1.6 4x4	Hatchback	05/04-02/07	HR 16 DE	81	330697	330711, 330719		330543	
1.8	Hatchback	05/04-02/07	MR18DE	93	330697	330711			
	Hatchback (C11X)	09/07-	MR18DE	93	330697	330711		330543	
	Saloon (SC11X)	09/07-	MR18DE	93	330697	330711		330543	
URVAN			**06/86 - 05/97**						
2.0	Box (E24)	05/87-05/97	Z20	64	330007	330044	330098		
2.3 D	Box (E24)	01/88-05/97	TD23	51	330007	330044	330098, 330691		
2.4 i	Bus (E24)	05/89-09/93	Z24i	74	330007	330044	330098, 330655		
2.5 D	Box (E24)	12/88-05/97	TD25	59	330007	330044	330098, 330691		
	Bus (E24)	05/89-10/96	TD25	59	330007	330044	330098, 330691		
VANETTE			**10/86 - 12/95**						
2.0	Bus (C22)	07/87-08/94	Z20S	66			330098		
2.0 D	Bus (C22)	10/86-12/95	LD20	47	330359				
	Box (C22)	07/91-01/95	LD20II	49	330359				
	Bus (C22)	10/86-12/95	LD20	49	330359				
2.4 i	Bus (C22)	10/86-12/95	Z24i	74			330098, 330655		
	Bus (C22)	10/86-12/95	Z24i	77			330098, 330655		

OPS Oil Pressure Switches **BLS** Brake Light Switches **TT-RF** Temperature Transmitter and Radiator Fan Switches **RLS** Reverse Light Switches **VAR** Various

ERA S.p.A. Moncalieri (TO) Italy - tel: +39 011 6891511 - fax: +39 011 6472862 - www.eranet.it

Vehicle		Date	Engine	kW	OPS	BLS	TT-RF	RLS	VAR
X-TRAIL			**06/01 -**						
2.0	(T30)	07/01-	QR20DE	103	330697	330711, 330719		330746, 330747	
	(T31)	06/08-	MR20DE	103	330697	330711, 330719		330746, 330747	
	(T31)	06/07-	MR20DE	104	330697	330711, 330719		330543, 330746, 330747	
	(T30)	09/01-	QR20DE	110	330697	330711, 330719		330746, 330747	
2.0 4x4	(T30)	07/01-	QR20DE	103	330697	330711, 330719		330746, 330747	
	(T30)	09/01-	QR20DE	110	330697	330711, 330719		330746, 330747	
2.0 FWD	(T31)	06/08-	MR20DE	103	330697	330711, 330719		330746, 330747	
	(T31)	03/07-	MR20DE	104	330697	330711, 330719		330746, 330747	
2.0 dCi	(T31)	06/07-	M9R	110	330698	330711, 330719	330558	330543, 330746, 330747	
	(T31)	06/07-	M9R 760	127	330698	330711, 330719	330558	330543, 330746, 330747	
2.2 DCi	(T30)	10/04-	YD22DDTi	84	330697	330711		330746, 330747	
2.2 dCi	(T30)	12/03-	YD22DDTi	100	330697	330711		330746, 330747	
2.2 dCi 4x4	(T30)	12/03-	YD22DDTi	100	330697	330711		330746, 330747	
2.2 DCi FWD	(T30)	06/01-09/03	YD22DDTi	84	330697	330711		330746, 330747	
2.2 Di 4x4	(T30)	07/01-	YD22ETI	84	330697	330711		330746, 330747	
2.5	(T31)	06/07-	QR25DE	124	330697	330711, 330719		330543, 330746, 330747	
2.5 4x4	(T30)	01/03-	QR25DE	121	330697	330711, 330719		330746, 330747	
	(T30)	11/02-	QR25DE	132	330697	330711, 330719		330746, 330747	
OPEL									
AGILA			**09/00 -**						
1.0	(H00)	08/03-	Z 10 XEP	44	330366	330741	330137	330244, 330745	
	(H08)	04/08-	K10B	48	330009, 330567			330745	
1.0 12V	(H00)	09/00-	Z 10 XE	43	330366	330741	330085, 330137	330244, 330745	
1.2	(H08)	04/08-	K12B	63	330009, 330567			330745	
1.2 16V	(H00)	09/00-	Z 12 XE	55	330366	330741	330085, 330137	330244, 330745	
1.2 16V Twinport	(H00)	07/04-	Z 12 XEP	59	330366	330741	330137	330244, 330745	
1.3 CDTI	(H00)	08/03-	Z 13 DT	51		330720, 330741	330142	330244, 330745	
	(H08)	04/08-	Z 13 DTJ	55		330720, 330723	330142	330745	
ANTARA			**05/06 -**						
2.0 CDTI		03/07-	Z 20 S	93	330364				
		05/06-	Z 20 DMH	110	330364				
2.4		05/06-	Z 24 XED	104	330364		330089, 330107		
3.2 V6		05/06-	Z 32 SEE	165			330137		
		03/07-	10 HM	167			330137		
ARENA			**03/98 - 08/01**						
1.9 D	Box (TB, TF)	03/98-08/01	F8Q 600, F8Q 606	44	330027	330037, 330055	330139, 330153, 330181	330237	

OPS Oil Pressure Switches **BLS** Brake Light Switches **TT-RF** Temperature Transmitter and Radiator Fan Switches **RLS** Reverse Light Switches **VAR** Various

Vehicle		Date	Engine	kW	OPS	BLS	TT-RF	RLS	VAR
1.9 D	Combi (THB)	03/98-08/01	F8Q 600, F8Q 606	44	330027	330055	330139, 330153, 330181	330237	
2.5 D	Box (TB, TF)	03/98-08/01	S8U 758, S8U 780, S8U 782	55	330018	330037, 330055	330181	330237	
	Combi (THB)	03/98-08/01	S8U 758, S8U 780, S8U 782	55	330018	330055	330181	330237	
ASCONA		**09/81 - 10/88**							
1.3 N	C (81_, 86_, 87_, 88_)	09/81-08/86	13 N	44	330011	330034	330085, 330303	330235	
	C Hatchback (84_, 89_)	09/81-08/86	13 N	44	330011	330034	330085, 330303	330235	
1.6	C (81_, 86_, 87_, 88_)	09/81-09/87	16 N	55	330011	330034	330085, 330303	330235	
	C Hatchback (84_, 89_)	09/81-08/88	16 N	55	330011	330034	330085, 330303	330235	
	C (81_, 86_, 87_, 88_)	09/86-08/88	16 SV	60	330011	330034	330085, 330303	330235	
	C Hatchback (84_, 89_)	09/86-08/88	16 SV	60	330011	330034	330085, 330303	330235	
1.6 i CAT	C (81_, 86_, 87_, 88_)	09/86-08/88	C 16 LZ, C 16 NZ	55	330016	330034	330085, 330303	330235	
	C Hatchback (84_, 89_)	09/86-08/88	C 16 LZ, C 16 NZ	55	330016	330034	330085, 330303	330235	
1.6 S	C (81_, 86_, 87_, 88_)	09/81-08/86	16 SH	66	330011	330034	330085, 330303	330235	
	C Hatchback (84_, 89_)	09/81-08/86	16 SH	66	330011	330034	330085, 330303	330235	
1.8	C (81_, 86_, 87_, 88_)	09/87-08/88	E 18 NV	62	330011	330034	330085, 330116, 330303	330235	
	C Hatchback (84_, 89_)	09/87-08/88	E 18 NV	62	330011	330034	330085, 330116, 330303	330235	
1.8 E	C (81_, 86_, 87_, 88_)	01/85-08/86	C 18 NE, S 18 NV	74	330011	330034	330085, 330116, 330303	330235	
	C Hatchback (84_, 89_)	01/85-08/86	C 18 NE, S 18 NV	74	330011	330034	330085, 330116, 330303	330235	
1.8 i	C (81_, 86_, 87_, 88_)	09/82-08/86	18 E	85	330011	330034	330085, 330116, 330303	330235	
	C Hatchback (84_, 89_)	09/82-08/86	18 E	85	330011	330034	330085, 330116, 330303	330235	
2.0 i	C (81_, 86_, 87_, 88_)	09/86-08/88	20 NE	85	330011	330034	330085, 330116, 330303	330235	
	C Hatchback (84_, 89_)	09/86-08/88	20 NE	85	330011	330034	330085, 330116, 330303	330235	
2.0 i CAT	C (81_, 86_, 87_, 88_)	09/86-08/88	C 20 NE	85	330011	330034	330085, 330116, 330303	330235	
	C Hatchback (84_, 89_)	09/86-08/88	C 20 NE	85	330011	330034	330085, 330116, 330303	330235	
2.0 i GT	C (81_, 86_, 87_, 88_)	03/87-08/88	20 SEH	95	330011	330034	330085, 330116, 330303	330235	
	C Hatchback (84_, 89_)	03/87-08/88	20 SEH	95	330011	330034	330085, 330116, 330303	330235	
ASTRA		**09/91 -**							
1.2	H	10/06-	X 12 XE	48		330720, 330721	330137		
	H GTC	10/06-	X 12 XE	48		330720, 330721	330137		
	H	08/05-	Z 12 XEP	59		330720, 330721	330137		
	H GTC	08/05-	Z 12 XEP	59		330720, 330721	330137		
1.2 16V	G Estate (F35_)	02/98-09/00	X 12 XE	48	330366	330080, 330429, 330529	330137	330244	
	G Hatchback (F48_, F08_)	02/98-09/00	X 12 XE	48	330366	330080, 330429, 330529	330137	330244	

OPS Oil Pressure Switches **BLS** Brake Light Switches **TT-RF** Temperature Transmitter and Radiator Fan Switches **RLS** Reverse Light Switches **VAR** Various

ERA S.p.A. Moncalieri (TO) Italy - tel: +39 011 6891511 - fax: +39 011 6472862 - www.eranet.it

Vehicle		Date	Engine	kW	OPS	BLS	TT-RF	RLS	VAR
1.2 16V	G Saloon (F69_)	09/98-09/00	X 12 XE	48	330366	330080, 330429, 330529	330137	330244	
	G Estate (F35_)	09/00-07/04	Z 12 XE	55	330366	330529	330137	330244	
	G Hatchback (F48_, F08_)	09/00-01/05	Z 12 XE	55	330366	330529	330137	330244	
	G Saloon (F69_)	09/00-01/05	Z 12 XE	55	330366	330529	330137	330244	
1.3 CDTI	H	08/05-	Z 13 DTH	66		330720, 330721	330142		
	H Estate	08/05-	Z 13 DTH	66		330720, 330721	330142		
	H GTC	04/05-	Z 13 DTH	66		330720, 330721	330142		
1.4	F (56_, 57_)	09/91-09/93	14 NV	55	330363, 330364	330057, 330429	330085, 330178, 330220, 330223, 330277, 330298	330244	
	F Estate (51_, 52_)	09/91-09/93	14 NV	55	330363, 330364	330057, 330429	330085, 330178, 330220, 330223, 330277, 330298	330244	
	F Hatchback (53_, 54_, 58_, 59_)	09/91-09/93	14 NV	55	330363, 330364	330057, 330429	330085, 330178, 330220, 330223, 330277, 330298	330244	
	H	04/04-10/04	Z 14 XEL	59		330720, 330721	330137		
	F (56_, 57_)	09/92-09/98	14 SE	60	330363, 330364	330057, 330429	330116, 330178, 330220, 330223, 330277, 330298	330244	
	F Estate (51_, 52_)	09/92-01/98	14 SE	60	330363, 330364	330057, 330429	330116, 330178, 330220, 330223, 330277, 330298	330244	
	F Hatchback (53_, 54_, 58_, 59_)	09/92-01/98	14 SE	60	330363, 330364	330057, 330429	330116, 330178, 330220, 330223, 330277, 330298	330244	
	G Estate (F35_)	09/07-12/09	Z 14 XEP	66			330137	330244	
	G Hatchback (F48_, F08_)	09/07-12/09	Z 14 XEP	66			330137	330244	
	G Saloon (F69_)	09/07-12/09	Z 14 XEP	66			330137	330244	
	H	03/04-	Z 14 XEP	66		330720, 330721	330137		
	H Estate	08/04-	Z 14 XEP	66		330720, 330721	330137		
	H GTC	03/05-	Z 14 XEP	66		330720, 330721	330137		
1.4 16V	G Estate (F35_)	06/98-07/04	X 14 XE, Z 14 XE	66	330363, 330364	330080, 330429, 330529, 330720	330137	330244	
	G Hatchback (F48_, F08_)	02/98-01/05	X 14 XE, Z 14 XE	66	330363, 330364	330080, 330429, 330529, 330720	330137	330244	
	G Saloon (F69_)	09/98-01/05	X 14 XE, Z 14 XE	66	330363, 330364	330080, 330429, 330529, 330720	330137	330244	
1.4 i	F (56_, 57_)	09/91-09/98	C 14 NZ	44	330363, 330364	330057, 330429	330085, 330116, 330178, 330220, 330223, 330277, 330298	330244	
	F Estate (51_, 52_)	09/91-01/98	C 14 NZ	44	330363, 330364	330057, 330429	330085, 330116, 330178, 330220, 330223, 330277, 330298	330244	
	F Hatchback (53_, 54_, 58_, 59_)	03/92-01/98	C 14 NZ	44	330363, 330364	330057, 330429	330085, 330116, 330178, 330220, 330223, 330277, 330298	330244	

Vehicle		Date	Engine	kW	OPS	BLS	TT-RF	RLS	VAR
1.4 i	F Van (55_)	10/91-01/99	C 14 NZ	44	330363, 330364	330057, 330429	330085, 330116, 330178, 330220, 330223, 330277, 330298	330244	
1.4 i 16V	F (56_, 57_)	02/96-09/98	X 14 XE	66	330363, 330364	330057, 330429	330085, 330116, 330178, 330220, 330223, 330277, 330298	330244	
	F Convertible (53_B)	01/96-03/01	X 14 XE	66	330363, 330364	330057, 330429	330085, 330116, 330178, 330220, 330223, 330277, 330298	330244	
	F Estate (51_, 52_)	02/96-01/98	X 14 XE	66	330363, 330364	330057, 330429	330085, 330116, 330178, 330220, 330223, 330277, 330298	330244	
	F Hatchback (53_, 54_, 58_, 59_)	01/96-01/98	X 14 XE	66	330363, 330364	330057, 330429	330085, 330116, 330178, 330220, 330223, 330277, 330298	330244	
1.4 Si	F (56_, 57_)	03/92-09/98	C 14 SE	60	330363, 330364	330057, 330429	330085, 330116, 330178, 330220, 330223, 330277, 330298	330244	
	F Convertible (53_B)	05/93-03/01	C 14 SE	60	330363, 330364	330057, 330429	330085, 330116, 330178, 330220, 330223, 330277, 330298	330244	
	F Estate (51_, 52_)	03/92-01/98	C 14 SE	60	330363, 330364	330057, 330429	330085, 330116, 330178, 330220, 330223, 330277, 330298	330244	
	F Hatchback (53_, 54_, 58_, 59_)	03/92-01/98	C 14 SE	60	330363, 330364	330057, 330429	330085, 330116, 330178, 330220, 330223, 330277, 330298	330244	
1.6	F (56_, 57_)	09/95-09/98	16 LZ2, 16 NZR	55	330364	330057, 330429	330085, 330116, 330126, 330178, 330220, 330223, 330277, 330298	330244	
	F Estate (51_, 52_)	09/95-01/98	16 LZ2, 16 NZR	55	330363, 330364	330057, 330429	330085, 330116, 330126, 330178, 330220, 330223, 330277, 330298	330244	
	F Hatchback (53_, 54_, 58_, 59_)	09/95-01/98	16 LZ2, 16 NZR	55	330363, 330364	330057, 330429	330085, 330116, 330126, 330178, 330220, 330223, 330277, 330298	330244	
	G Box (F70)	01/99-09/00	X 16 SZR	55	330363, 330364	330080, 330429, 330529	330085, 330137	330244	
	G Estate (F35_)	02/98-09/00	X 16 SZR	55	330363, 330364	330080, 330429, 330529	330085, 330137	330244	
	G Hatchback (F48_, F08_)	02/98-09/00	X 16 SZR	55	330363, 330364	330080, 330429, 330529	330085, 330137	330244	
	G Saloon (F69_)	09/98-09/00	X 16 SZR	55	330363, 330364	330080, 330429, 330529	330085, 330137	330244	
	G Box (F70)	09/00-04/05	Z 16 SE	62	330364	330529, 330720	330137	330244	
	G Estate (F35_)	09/00-07/04	Z 16 SE	62	330363, 330364	330529, 330720	330137	330244	

OPS Oil Pressure Switches **BLS** Brake Light Switches **TT-RF** Temperature Transmitter and Radiator Fan Switches **RLS** Reverse Light Switches **VAR** Various

ERA S.p.A. Moncalieri (TO) Italy - tel: +39 011 6891511 - fax: +39 011 6472862 - www.eranet.it

Vehicle		Date	Engine	kW	OPS	BLS	TT-RF	RLS	VAR
1.6	G Hatchback (F48_, F08_)	09/00-01/05	Z 16 SE	62	330363, 330364	330529, 330720	330137	330244	
	G Saloon (F69_)	09/00-01/05	Z 16 SE	62	330363, 330364	330529, 330720	330137	330244	
	G Convertible	01/03-10/05	Z 16 XEP	76		330720	330137	330244	
	G Estate (F35_)	12/02-07/09	Z 16 XEP	76		330720	330137	330244	
	G Hatchback (F48_, F08_)	12/02-01/05	Z 16 XEP	76		330720	330137	330244	
	G Saloon (F69_)	12/02-01/05	Z 16 XEP	76		330720	330137	330244	
	H	03/04-	Z 16 XEP	77	330366, 330537, 330538	330720, 330721	330137		
	H Estate	08/04-	Z 16 XEP	77	330366, 330537, 330538	330720, 330721	330137		
	H GTC	03/05-	Z 16 XEP	77	330366, 330537, 330538	330720, 330721	330137		
	H TwinTop	09/05-	Z 16 XEP	77	330366, 330537, 330538	330720, 330721	330137		
	H	12/06-	Z 16 XER	85	330366	330720, 330721			
	H Estate	12/06-	A 16 XER	85	330366	330720, 330721			
	H GTC	12/06-	Z 16 XER	85	330366	330720, 330721			
	H TwinTop	12/06-	Z 16 XER	85	330366	330720, 330721			
1.6 16V	G Convertible	03/01-10/05	Z 16 XE	74	330363, 330364	330431, 330529, 330720	330137	330244	
	G Estate (F35_)	02/98-07/04	X 16 XEL, Z 16 XE	74	330363, 330364	330080, 330429, 330431, 330529, 330720	330137	330244	
	G Hatchback (F48_, F08_)	02/98-01/05	X 16 XEL, Z 16 XE	74	330363, 330364	330080, 330429, 330431, 330529, 330720	330137	330244	
	G Saloon (F69_)	09/98-01/05	X 16 XEL, Z 16 XE	74	330363, 330364	330080, 330429, 330431, 330529, 330720	330137	330244	
	G Coupe (F07_)	03/00-05/05	Z 16 XEP	76		330720	330137	330244	
1.6 CNG	G Estate (F35_)	03/03-07/04	Z 16 YNG	71	330364	330431, 330720	330137	330244	
1.6 i	F (56_, 57_)	05/93-07/96	X 16 SZ	52	330363, 330364	330057, 330429	330085, 330116, 330178, 330220, 330223, 330277, 330298	330244	
	F Convertible (53_B)	03/93-08/96	X 16 SZ	52	330363, 330364	330057, 330429	330085, 330116, 330178, 330220, 330223, 330277, 330298	330244	
	F Estate (51_, 52_)	05/93-07/96	X 16 SZ	52	330363, 330364	330057, 330429	330085, 330116, 330178, 330220, 330223, 330277, 330298	330244	
	F Hatchback (53_, 54_, 58_, 59_)	05/93-07/96	X 16 SZ	52	330363, 330364	330057, 330429	330085, 330116, 330178, 330220, 330223, 330277, 330298	330244	
	F Van (55_)	02/93-07/96	X 16 SZ	52	330363, 330364	330057, 330429	330085, 330116, 330178, 330220, 330223, 330277, 330298	330244	

OPS Oil Pressure Switches **BLS** Brake Light Switches **TT-RF** Temperature Transmitter and Radiator Fan Switches **RLS** Reverse Light Switches **VAR** Various

Vehicle		Date	Engine	kW	OPS	BLS	TT-RF	RLS	VAR
1.6 i	F (56_, 57_)	03/92-09/98	C 16 NZ	55	330363, 330364	330057, 330429	330085, 330116, 330178, 330220, 330223, 330277, 330298	330244	
	F (56_, 57_)	08/96-09/98	X 16 SZR	55	330363, 330364	330057, 330429	330085, 330116, 330178, 330220, 330223, 330277, 330298	330244	
	F Convertible (53_B)	01/96-03/01	X 16 SZR	55	330363, 330364	330057, 330429	330085, 330116, 330178, 330220, 330223, 330277, 330298	330244	
	F Estate (51_, 52_)	09/91-01/98	C 16 NZ, X 16 SZR	55	330363, 330364	330057, 330429	330085, 330116, 330178, 330220, 330223, 330277, 330298	330244	
	F Hatchback (53_, 54_, 58_, 59_)	09/91-01/98	C 16 NZ, X 16 SZR	55	330363, 330364	330057, 330429	330085, 330116, 330178, 330220, 330223, 330277, 330298	330244	
	F Van (55_)	10/91-04/93	C 16 NZ	55	330363, 330364	330057, 330429	330085, 330116, 330178, 330220, 330223, 330277, 330298	330244	
1.6 i 16V	F (56_, 57_)	08/94-09/98	X 16 XEL	74	330363, 330364	330057, 330429	330085, 330116, 330126, 330178, 330220, 330223, 330277, 330298	330244	
	F Estate (51_, 52_)	08/94-01/98	X 16 XEL	74	330363, 330364	330057, 330429	330085, 330116, 330126, 330178, 330220, 330223, 330277, 330298	330244	
	F Hatchback (53_, 54_, 58_, 59_)	08/94-01/98	X 16 XEL	74	330363, 330364	330057, 330429	330085, 330116, 330126, 330178, 330220, 330223, 330277, 330298	330244	
1.6 Si	F (56_, 57_)	05/92-12/94	C 16 SE	74	330363, 330364	330057, 330429	330085, 330116, 330178, 330220, 330223, 330277, 330298	330244	
	F Estate (51_, 52_)	03/92-12/94	C 16 SE	74	330363, 330364	330057, 330429	330085, 330116, 330178, 330220, 330223, 330277, 330298	330244	
	F Hatchback (53_, 54_, 58_, 59_)	03/92-12/94	C 16 SE	74	330363, 330364	330057, 330429	330085, 330116, 330178, 330220, 330223, 330277, 330298	330244	
1.6 Turbo	H	02/07-	Z 16 LET	132	330366	330720, 330721			
	H Estate	02/07-	Z 16 LET	132	330366	330720, 330721			
	H GTC	02/07-	Z 16 LET	132	330366	330720, 330721			
	H TwinTop	02/07-	Z 16 LET	132	330366	330720, 330721			
1.7 CDTI	G Estate (F35_)	04/03-07/09	Z 17 DTL	59	330007	330529, 330720	330137	330244	
	G Hatchback (F48_, F08_)	04/03-01/05	Z 17 DTL	59	330007	330529, 330720	330137	330244	
	G Saloon (F69_)	04/03-01/05	Z 17 DTL	59	330007	330529, 330720	330137	330244	
	H	03/04-	Z 17 DTL	59	330007	330720, 330721	330137		

OPS Oil Pressure Switches **BLS** Brake Light Switches **TT-RF** Temperature Transmitter and Radiator Fan Switches **RLS** Reverse Light Switches **VAR** Various

ERA S.p.A. Moncalieri (TO) Italy - tel: +39 011 6891511 - fax: +39 011 6472862 - www.eranet.it

Vehicle		Date	Engine	kW	OPS	BLS	TT-RF	RLS	VAR
1.7 CDTI	H Estate	08/04-	Z 17 DTL	59	330007	330720, 330721	330137		
	H GTC	03/05-	Z 17 DTL	59		330720, 330721			
	H	03/04-	Z 17 DTH	74	330007	330720, 330721	330137		
	H Estate	08/04-	Z 17 DTH	74	330007	330720, 330721	330137		
1.7 CDTi	H GTC	03/05-	Z 17 DTH	74	330007	330720, 330721	330137		
1.7 CDTI	H	02/07-	A 17 DTJ	81		330720, 330721	330137		
	H Estate	02/07-	Z 17 DTJ	81		330720, 330721	330137		
	H GTC	02/07-	A 17 DTJ	81		330720, 330721	330137		
	H	02/07-	Z 17 DTR	92		330720, 330721	330137		
	H Estate	02/07-	A 17 DTR	92		330720, 330721	330137		
	H GTC	02/07-	A 17 DTR	92		330720, 330721	330137		
1.7 D	F (56_, 57_)	03/92-09/92	17 D	42	330007	330057, 330429	330085, 330178, 330220, 330223, 330277, 330300	330244	
	F Estate (51_, 52_)	12/91-09/92	17 D	42	330007	330057, 330429	330085, 330178, 330220, 330223, 330277, 330300	330244	
	F Hatchback (53_, 54_, 58_, 59_)	12/91-09/92	17 D	42	330007	330057, 330429	330085, 330178, 330220, 330223, 330277, 330300	330244	
	F Van (55_)	12/91-09/92	17 D	42	330007	330057, 330429	330085, 330178, 330220, 330223, 330277, 330300	330244	
	F (56_, 57_)	07/92-09/98	17 DR	44	330364	330057, 330429	330085, 330178, 330218, 330220, 330223, 330277, 330299	330244	
	F Estate (51_, 52_)	07/92-01/98	17 DR	44	330364	330057, 330429	330085, 330178, 330218, 330220, 330223, 330277, 330299	330244	
	F Hatchback (53_, 54_, 58_, 59_)	07/92-01/98	17 DR	44	330364	330057, 330429	330085, 330178, 330218, 330220, 330223, 330277, 330299	330244	
	F Van (55_)	07/92-01/99	17 DR	44	330364	330057, 330429	330085, 330178, 330218, 330220, 330223, 330277, 330299	330244	
1.7 DTI 16V	G Estate (F35_)	02/00-07/04	Y 17 DT	55	330007	330529, 330720	330117	330244	
	G Hatchback (F48_, F08_)	02/00-01/05	Y 17 DT	55	330007	330529, 330720	330117	330244	
	G Saloon (F69_)	02/00-01/05	Y 17 DT	55	330007	330529, 330720	330117	330244	
1.7 TD	F (56_, 57_)	11/94-09/98	X 17 DTL	50	330363, 330364	330057, 330429	330085, 330126, 330178, 330220, 330223, 330277, 330300	330244	
	F Estate (51_, 52_)	11/94-01/98	X 17 DTL	50	330363, 330364	330057, 330429	330085, 330126, 330178, 330220, 330223, 330277, 330300	330244	

Vehicle		Date	Engine	kW	OPS	BLS	TT-RF	RLS	VAR
1.7 TD	F Hatchback (53_, 54_, 58_, 59_)	11/94-01/98	X 17 DTL	50	330363, 330364	330057, 330429	330085, 330126, 330178, 330220, 330223, 330277, 330300	330244	
	F Van (55_)	08/94-01/99	X 17 DTL	50	330363, 330364	330057, 330429	330085, 330126, 330178, 330220, 330223, 330277, 330300	330244	
	G Box (F70)	01/99-04/05	X 17 DTL	50	330363, 330364	330529, 330720	330137	330244	
	G Estate (F35_)	02/98-08/00	X 17 DTL	50	330363, 330364	330529, 330720	330137	330244	
	G Hatchback (F48_, F08_)	02/98-08/00	X 17 DTL	50	330363, 330364	330529, 330720	330137	330244	
	G Saloon (F69_)	09/98-08/00	X 17 DTL	50	330363, 330364	330529, 330720	330137	330244	
1.7 TDS	F (56_, 57_)	03/92-09/98	17 DT (TC4EE1), X 17 DT (TC4EE1)	60	330007	330057, 330429	330085, 330178, 330220, 330223, 330277, 330300	330244	
	F Estate (51_, 52_)	12/91-01/98	17 DT (TC4EE1), X 17 DT (TC4EE1)	60	330007	330057, 330429	330085, 330178, 330220, 330223, 330277, 330300	330244	
	F Hatchback (53_, 54_, 58_, 59_)	12/91-01/98	17 DT (TC4EE1), X 17 DT (TC4EE1)	60	330007	330057, 330429	330085, 330178, 330220, 330223, 330277, 330300	330244	
1.8	G Estate (F35_)	02/03-07/04	Z 18 XEL	81		330720			
	G Hatchback (F48_, F08_)	02/03-01/04	Z 18 XEL	81		330720			
	G Saloon (F69_)	02/03-01/05	Z 18 XEL	81		330720			
	H	03/04-	Z 18 XE	92	330363, 330364	330720, 330721	330509		
	H Estate	08/04-	Z 18 XE	92	330363, 330364	330720, 330721	330509		
	H GTC	03/05-	Z 18 XE	92	330363, 330364	330720, 330721	330509		
	H TwinTop	09/05-	Z 18 XE	92	330363, 330364	330720, 330721	330509		
	H	01/06-	Z 18 XER	103	330366	330720, 330721			
	H Estate	08/05-	Z 18 XER	103	330366	330720, 330721			
	H GTC	01/06-	Z 18 XER	103	330366	330720, 330721			
	H TwinTop	09/05-	Z 18 XER	103	330366	330720, 330721			
1.8 16V	G Coupe (F07_)	03/00-10/00	X 18 XE1	85	330363, 330364	330080, 330429, 330431, 330529, 330720	330509	330244	
	G Estate (F35_)	02/98-09/00	X 18 XE1	85	330363, 330364	330080, 330429, 330431, 330529, 330720	330509	330244	
	G Hatchback (F48_, F08_)	02/98-09/00	X 18 XE1	85	330363, 330364	330080, 330429, 330431, 330529, 330720	330509	330244	
	G Saloon (F69_)	09/98-09/00	X 18 XE1	85	330363, 330364	330080, 330429, 330431, 330529, 330720	330509	330244	
	G Convertible	03/01-10/05	Z 18 XE	92	330363, 330364	330431, 330529, 330720	330509	330244	
	G Coupe (F07_)	09/00-05/05	Z 18 XE	92	330363, 330364	330431, 330529, 330720	330509	330244	
	G Estate (F35_)	09/00-07/04	Z 18 XE	92	330363, 330364	330431, 330529, 330720	330509	330244	
	G Hatchback (F48_, F08_)	09/00-01/05	Z 18 XE	92	330363, 330364	330431, 330529, 330720	330509	330244	

OPS Oil Pressure Switches **BLS** Brake Light Switches **TT-RF** Temperature Transmitter and Radiator Fan Switches **RLS** Reverse Light Switches **VAR** Various

ERA S.p.A. Moncalieri (TO) Italy - tel: +39 011 6891511 - fax: +39 011 6472862 - www.eranet.it

Vehicle		Date	Engine	kW	OPS	BLS	TT-RF	RLS	VAR
1.8 16V	G Saloon (F69_)	09/00-01/05	Z 18 XE	92	330363, 330364	330431, 330529, 330720	330509	330244	
1.8 i	F (56_, 57_)	03/92-09/98	C 18 NZ	66	330363, 330364	330057, 330429	330085, 330116, 330178, 330220, 330223, 330277, 330298, 330299	330244	
	F Estate (51_, 52_)	09/91-01/98	C 18 NZ	66	330363, 330364	330057, 330429	330085, 330116, 330178, 330220, 330223, 330277, 330298, 330299	330244	
	F Hatchback (53_, 54_, 58_, 59_)	09/91-01/98	C 18 NZ	66	330364	330057, 330429	330085, 330116, 330178, 330220, 330223, 330277, 330298, 330299	330244	
1.8 i 16V	F (56_, 57_)	11/94-09/98	C 18 XEL, X 18 XE	85	330363, 330364	330057, 330429	330085, 330120, 330178, 330220, 330223, 330277, 330300	330244	
	F Convertible (53_B)	11/94-03/01	C 18 XEL, X 18 XE	85	330363, 330364	330057, 330429	330085, 330120, 330178, 330220, 330223, 330277, 330300, 330651	330244	
	F Estate (51_, 52_)	07/94-01/98	C 18 XEL, X 18 XE	85	330363, 330364	330057, 330429	330085, 330178, 330220, 330223, 330277, 330300	330244	
	F Hatchback (53_, 54_, 58_, 59_)	09/94-01/98	C 18 XEL, X 18 XE	85	330364	330057, 330429	330085, 330120, 330178, 330220, 330223, 330277, 330300	330244	
	F (56_, 57_)	06/93-10/94	C 18 XE	92	330363, 330364	330057, 330429	330085, 330120, 330178, 330220, 330223, 330277, 330300, 330651	330244	
	F Estate (51_, 52_)	06/93-01/98	C 18 XE	92	330363, 330364	330057, 330429	330085, 330120, 330178, 330220, 330223, 330277, 330300, 330651	330244	
	F Hatchback (53_, 54_, 58_, 59_)	06/93-08/94	C 18 XE	92	330364	330057, 330429	330085, 330120, 330178, 330220, 330223, 330277, 330300, 330651	330244	
1.9 CDTI	H	09/05-	Z 19 DTL	74		330720, 330721	330142		
	H Estate	09/05-	Z 19 DTL	74		330720, 330721	330142		
	H GTC	01/06-	Z 19 DTL	74		330720, 330721	330142		
	H	06/04-	Z 19 DT	88		330720, 330721	330142		
	H Estate	09/05-	Z 19 DT	88		330720, 330721	330142		
	H GTC	09/05-	Z 19 DT	88		330720, 330721	330142		
1.9 CDTi	H Estate	12/04-	--	103		330720, 330721			
1.9 CDTI	H	09/04-	Z 19 DTH	110		330720, 330721	330142		
	H Estate	09/04-	Z 19 DTH	110		330720, 330721	330142		
1.9 CDTi	H GTC	03/05-	Z 19 DTH	110		330720, 330721	330142		
	H TwinTop	09/05-	Z 19 DTH	110		330720, 330721	330142		
1.9 CDTI 16V	H	04/04-	Z 19 DTJ	88		330720, 330721	330142		
	H Estate	08/04-	Z 19 DTJ	88		330720, 330721	330142		

OPS Oil Pressure Switches **BLS** Brake Light Switches **TT-RF** Temperature Transmitter and Radiator Fan Switches **RLS** Reverse Light Switches **VAR** Various

Vehicle		Date	Engine	kW	OPS	BLS	TT-RF	RLS	VAR
1.9 CDTi 16V	H GTC	03/05-	Z 19 DTJ	88		330720, 330721	330142		
2.0 16V	G Estate (F35_)	02/98-07/04	X 20 XEV	100	330363, 330364	330080, 330429, 330529	330509	330244	
	G Hatchback (F48_, F08_)	02/98-01/05	X 20 XEV	100	330363, 330364	330080, 330429, 330529	330509	330244	
	G Saloon (F69_)	09/98-01/05	X 20 XEV	100	330363, 330364	330080, 330429, 330529	330509	330244	
2.0 16V OPC	G Hatchback (F48_, F08_)	11/99-09/02	X 20 XER	118	330363, 330364	330080, 330429, 330529, 330720	330509	330244	
2.0 16V Turbo	G Coupe (F07_)	09/00-08/01	Z 20 LET	140	330363, 330364	330431, 330529, 330720	330137	330244	
	G Coupe (F07_)	08/01-05/05	Z 20 LET	141	330363, 330364	330431, 330529, 330720	330137	330244	
2.0 DI	G Box (F70)	01/99-04/05	X 20 DTL	60	330364	330431, 330529, 330720	330137	330244	
	G Estate (F35_)	02/98-07/04	X 20 DTL, Y 20 DTL	60	330364, 330365	330431, 330529, 330720	330137	330244	
	G Hatchback (F48_, F08_)	02/98-01/05	X 20 DTL, Y 20 DTL	60	330364, 330365	330431, 330529, 330720	330137	330244	
	G Saloon (F69_)	09/98-01/05	X 20 DTL, Y 20 DTL	60	330364, 330365	330431, 330529, 330720	330137	330244	
2.0 DTI 16V	G Estate (F35_)	08/99-07/04	X 20 DTH, Y 20 DTH	74	330364, 330365	330431, 330720	330137	330244	
	G Hatchback (F48_, F08_)	08/99-01/05	X 20 DTH, Y 20 DTH	74	330364, 330365	330431, 330720	330137	330244	
	G Saloon (F69_)	08/99-01/05	X 20 DTH, Y 20 DTH	74	330364, 330365	330431, 330720	330137	330244	
2.0 GSI 16V	F Hatchback (53_, 54_, 58_, 59_)	09/91-01/98	C 20 XE	110	330363, 330364	330057, 330429	330085, 330116, 330126, 330133, 330178, 330220, 330223, 330277, 330299	330244	
2.0 i	F (56_, 57_)	03/92-09/98	C 20 NE	85	330363, 330364	330057, 330429	330085, 330116, 330126, 330178, 330220, 330223, 330277, 330299	330244	
	F Convertible (53_B)	03/93-10/94	C 20 NE	85	330363, 330364	330057, 330429	330085, 330116, 330126, 330178, 330220, 330223, 330277, 330299	330244	
	F Estate (51_, 52_)	09/91-07/94	C 20 NE	85	330363, 330364	330057, 330429	330085, 330116, 330126, 330178, 330220, 330223, 330277, 330299	330244	
	F Hatchback (53_, 54_, 58_, 59_)	09/91-01/98	C 20 NE	85	330363, 330364	330057, 330429	330085, 330116, 330126, 330178, 330220, 330223, 330277, 330299	330244	
2.0 i 16V	F (56_, 57_)	02/95-09/98	X 20 XEV	100	330363, 330364	330057, 330429	330085, 330120, 330126, 330178, 330220, 330223, 330277, 330300	330244	
	F Estate (51_, 52_)	02/95-01/98	X 20 XEV	100	330363, 330364	330057, 330429	330085, 330120, 330126, 330178, 330220, 330223, 330277, 330300	330244	

OPS Oil Pressure Switches **BLS** Brake Light Switches **TT-RF** Temperature Transmitter and Radiator Fan Switches **RLS** Reverse Light Switches **VAR** Various

ERA S.p.A. Moncalieri (TO) Italy - tel: +39 011 6891511 - fax: +39 011 6472862 - www.eranet.it

Vehicle		Date	Engine	kW	OPS	BLS	TT-RF	RLS	VAR
2.0 i 16V	F Hatchback (53_, 54_, 58_, 59_)	02/95-01/98	X 20 XEV	100	330363, 330364	330057, 330429	330085, 330120, 330126, 330178, 330220, 330223, 330277, 330300	330244	
	F Estate (51_, 52_)	03/93-01/98	C 20 XE	110	330363, 330364	330057, 330429	330085, 330116, 330126, 330133, 330178, 330220, 330223, 330277, 330299	330244	
2.0 OPC	G Convertible	03/02-10/05	Z 20 LET	141	330363, 330364	330431, 330529, 330720	330137	330244	
	G Estate (F35_)	09/02-07/04	Z 20 LET	141	330363, 330364	330431, 330529, 330720	330137	330244	
	G Hatchback (F48_, F08_)	09/02-01/05	Z 20 LET	141	330363, 330364	330431, 330529, 330720	330137	330244	
	G Hatchback (F48_, F08_)	11/02-01/05	Z 20 LER, Z 20 LET	147	330364	330431, 330529, 330720	330137	330244	
2.0 Turbo	H	03/04-	Z 20 LEL	125	330364	330720, 330721	330137		
	H Estate	08/04-	Z 20 LEL	125	330364	330720, 330721	330137		
	H GTC	03/05-	Z 20 LEL	125	330364	330720, 330721	330137		
	H TwinTop	09/05-	Z 20 LEL	125	330364	330720, 330721	330137		
	H	09/04-	Z 20 LER	147	330364	330720, 330721	330137		
	H Estate	09/04-	Z 20 LER	147	330364	330720, 330721	330137		
	H GTC	03/05-	Z 20 LER	147	330364	330720, 330721	330137		
	H TwinTop	09/05-	Z 20 LER	147	330364	330720, 330721	330137		
	H	03/05-	Z 20 LEH	177	330364	330720, 330721	330137		
	H GTC	08/05-	Z 20 LEH	177	330364	330720, 330721	330137		
2.2 16V	G Convertible	03/01-10/05	Z 22 SE	108		330431, 330529, 330720	330107	330244	
	G Coupe (F07_)	09/00-05/05	Z 22 SE	108		330431, 330529, 330720	330107	330244	
	G Estate (F35_)	03/01-07/04	Z 22 SE	108		330431, 330529, 330720	330107	330244	
	G Hatchback (F48_, F08_)	03/01-01/05	Z 22 SE	108		330431, 330529, 330720	330107	330244	
	G Saloon (F69_)	03/01-01/05	Z 22 SE	108		330431, 330529, 330720	330107	330244	
2.2 DTI	G Convertible	09/02-10/05	Y 22 DTR	92	330364, 330365	330431, 330529, 330720	330137	330244	
	G Coupe (F07_)	09/02-05/05	Y 22 DTR	92	330364, 330365	330431, 330529, 330720	330137	330244	
	G Estate (F35_)	09/02-07/04	Y 22 DTR	92	330364, 330365	330431, 330529, 330720	330137	330244	
	G Hatchback (F48_, F08_)	09/02-01/05	Y 22 DTR	92	330364, 330365	330431, 330529, 330720	330137	330244	
	G Saloon (F69_)	09/02-01/05	Y 22 DTR	92	330364, 330365	330431, 330529, 330720	330137	330244	
ASTRA F CLASSIC		**01/98 - 01/05**							
1.4 Comfort	Estate	09/03-01/05	Z 14 XEP	66			330137	330244	

OPEL

OPS Oil Pressure Switches **BLS** Brake Light Switches **TT-RF** Temperature Transmitter and Radiator Fan Switches **RLS** Reverse Light Switches **VAR** Various

Vehicle		Date	Engine	kW	OPS	BLS	TT-RF	RLS	VAR
1.4 i	Estate	01/98-01/05	X 14 NZ	44	330363, 330364	330057, 330429	330085, 330116, 330178, 330220, 330223, 330277, 330298	330244	
	Hatchback	01/98-08/02	X 14 NZ	44	330363, 330364	330057, 330429	330085, 330116, 330178, 330220, 330223, 330277, 330298	330244	
	Saloon	01/98-08/02	X 14 NZ	44	330363, 330364	330057, 330429	330085, 330116, 330178, 330220, 330223, 330277, 330298	330244	
1.6 i	Estate	01/98-01/05	X 16 SZR	55	330363, 330364	330057, 330429	330085, 330116, 330178, 330220, 330223, 330277, 330298	330244	
	Hatchback	01/98-08/02	X 16 SZR	55	330363, 330364	330057, 330429	330085, 330116, 330178, 330220, 330223, 330277, 330298	330244	
	Saloon	01/98-08/02	X 16 SZR	55	330363, 330364	330057, 330429	330085, 330116, 330178, 330220, 330223, 330277, 330298	330244	
1.6 i 16V	Estate	01/98-01/05	X 16 XEL	74	330363, 330364	330057, 330429	330085, 330116, 330126, 330178, 330220, 330223, 330277, 330298	330244	
	Hatchback	01/98-08/02	X 16 XEL	74	330363, 330364	330057, 330429	330085, 330116, 330126, 330178, 330220, 330223, 330277, 330298	330244	
	Saloon	01/98-08/02	X 16 XEL	74	330363, 330364	330057, 330429	330085, 330116, 330126, 330178, 330220, 330223, 330277, 330298	330244	
1.8	Estate	02/03-07/04	Z 18 XEL	81		330720			
1.8 i	Hatchback	03/98-08/00	X 18 XE1	85		330720			
2.0 Di	Hatchback	03/98-08/00	X 20 DTL	60		330720			
2.0 i	Hatchback	10/99-08/00	X 20 XER	118		330720			
ASTRA H			**02/07 -**						
1.3 CDTi	Saloon	02/07-	Z 13 DTH	66		330720, 330721			
1.6	Saloon	02/07-	Z 16 XER	85		330720, 330721			
1.7 CDTi	Saloon	02/07-	Z 17 DTH	74		330720, 330721			
	Saloon	02/07-	Z 17 DTJ	81		330720, 330721			
1.8	Saloon	02/07-	Z 18 XER	103		330720, 330721			
CALIBRA			**06/90 - 07/97**						
2.0 i	A (85_)	06/90-07/97	C 20 NE	85	330363, 330364	330057, 330429, 330436	330085, 330116, 330126, 330178, 330218, 330220, 330223, 330277, 330301	330244	

OPS Oil Pressure Switches **BLS** Brake Light Switches **TT-RF** Temperature Transmitter and Radiator Fan Switches **RLS** Reverse Light Switches **VAR** Various

ERA S.p.A. Moncalieri (TO) Italy - tel: +39 011 6891511 - fax: +39 011 6472862 - www.eranet.it

Vehicle		Date	Engine	kW	OPS	BLS	TT-RF	RLS	VAR
2.0 i 16V	A (85_)	02/94-07/97	X 20 XEV	100	330363, 330364	330057, 330429, 330436	330085, 330126, 330178, 330217, 330220, 330223, 330651	330244	
	A (85_)	06/90-02/94	C 20 XE	110	330363, 330364	330057, 330429, 330436	330085, 330116, 330126, 330178, 330220, 330223, 330277, 330301	330244	
2.0 i 16V 4x4	A (85_)	02/94-07/97	X 20 XEV	100	330363, 330364	330057, 330429, 330436	330085, 330126, 330178, 330217, 330220, 330223, 330651	330244	
	A (85_)	06/90-02/94	C 20 XE	110	330363, 330364	330057, 330429, 330436	330085, 330116, 330126, 330178, 330220, 330223, 330277, 330301	330244	
2.0 i 4x4	A (85_)	06/90-07/97	C 20 NE	85	330363, 330364	330057, 330429, 330436	330085, 330116, 330126, 330178, 330218, 330220, 330223, 330277, 330301	330244	
2.0 i Turbo 4x4	A (85_)	03/92-07/97	C 20 LET	150	330363, 330364	330057, 330429	330085, 330116, 330126, 330178, 330220, 330223, 330277, 330300, 330301	330244	
2.5 i V6	A (85_)	04/93-07/97	C 25 XE, X 25 XE	125	330364	330057, 330429, 330436	330085, 330116, 330126, 330302	330244	
CAMPO			**08/87 -**						
2.2 D	(TF_)	08/87-08/90	C223	45	330008	330044			
2.2 D 4x4	(TF_)	08/87-08/90	C223	45	330008	330044			
2.3	(TF_)	08/94-09/96	23 P	72	330008	330044	330100, 330116		
2.5 D	(TF_)	08/91-06/94	4 JA1	56	330008	330044			
2.5 D 4x4	(TF_)	08/91-06/94	4 JA1	56	330008	330044			
2.5 TD	(TF_)	07/94-	4 JA1T	56	330008	330044, 330701	330642		
2.5 TD 4x4	(TF_)	07/94-	4 JA1T	56	330008	330044, 330701	330642		
3.1 TD	(TF_)	12/92-	4 JG2T	80	330008	330044, 330701	330642		
3.1 TD 4x4	(TF_)	12/92-	4 JG2T	80	330008	330044, 330701	330642		
COMBO			**07/94 -**						
1.2	(71_)	07/94-10/01	C 12 NZ, X 12 SZ	33	330363, 330364	330034	330085, 330116, 330137, 330225, 330277	330244	
1.3 CDTI 16V	Box Body / Estate	08/05-	Z 13 DT	51		330547, 330548, 330720	330142	330244	
	Tour	10/04-	Z 13 DT	51		330547, 330548, 330720	330142	330244	
	Box Body / Estate	10/05-	Z 13 DTJ	55		330720	330142		
	Tour	10/05-	Z 13 DTJ	55		330720	330142		
1.4	(71_)	07/94-10/01	C 14 NZ, X 14 SZ	44	330363, 330364	330034	330085, 330116, 330137, 330225, 330277	330244	

OPS Oil Pressure Switches **BLS** Brake Light Switches **TT-RF** Temperature Transmitter and Radiator Fan Switches **RLS** Reverse Light Switches **VAR** Various

Vehicle		Date	Engine	kW	OPS	BLS	TT-RF	RLS	VAR
1.4	(71_)	07/94-10/01	C 14 SE	60	330363, 330364	330034	330085, 330116, 330137, 330225, 330277	330244	
	Tour	10/04-	Z 14 XEP	66	330366	330547, 330548, 330720	330137	330244	
1.4 16V	(71_)	08/99-10/01	X 14 XE	66	330363, 330364	330034	330085, 330116, 330126, 330137, 330225, 330277	330244	
	Box Body / Estate	08/05-	Z 14 XEP	66	330366	330547, 330548, 330720	330137	330244	
1.6	Tour	08/01-	Z 16 SE	62		330720			
	Box Body / Estate	10/01-	Z 16 SE	64	330364	330431, 330547, 330548, 330720	330137	330244	
	Tour	10/01-	Z 16 SE	64	330364	330431, 330547, 330548, 330720	330137	330244	
1.6 CNG	Tour	06/06-	Z 16 YNG	69	330364	330547, 330548, 330720	330137	330244	
	Tour	04/05-	Z 16 YNG	71	330364	330547, 330548, 330720	330137	330244	
1.6 CNG 16V	Box Body / Estate	06/06-	Z 16 YNG	69	330364	330547, 330548, 330720	330137	330244	
	Box Body / Estate	04/05-	Z 16 YNG	71	330364	330547, 330548, 330720	330137	330244	
1.7 CDTI 16V	Box Body / Estate	12/04-	Z 17 DTH	74	330007	330547, 330548, 330720	330137	330244	
	Tour	12/04-	Z 17 DTH	74	330007	330547, 330548, 330720	330137	330244	
1.7 D	(71_)	07/94-10/01	17 D (4EE1), X 17 D (4EE1)	44	330007	330034	330085, 330298	330244	
1.7 DI 16V	Box Body / Estate	10/01-	Y 17 DTL	48	330007	330431, 330547, 330548, 330720	330117	330244	
	Tour	10/01-	Y 17 DTL	48	330007	330431, 330547, 330548, 330720	330117	330244	
1.7 DTI 16V	Box Body / Estate	10/01-	Y 17 DT	55	330007	330431, 330547, 330548, 330720	330117	330244	
	Tour	10/01-	Y 17 DT	55	330007	330431, 330547, 330548, 330720	330117	330244	
CORSA			**09/82 -**						
1.0	A Box	02/86-04/89	10 S	33	330011, 330363, 330364	330034	330085, 330277, 330303	330235, 330244	
	A Hatchback (93_, 94_, 98_, 99_)	09/82-03/93	10 S	33	330011, 330363, 330364	330034	330085, 330277, 330303	330235, 330244	
	A TR (91_, 92_, 96_, 97_)	09/82-09/92	10 S	33	330011, 330363, 330364	330034	330085, 330277, 330303	330235, 330244	
	C (F08, F68)	09/00-	Z 10 XE	43	330366	330431, 330547, 330548, 330720	330137	330244	
	C (F08, F68)	06/03-	Z 10 XEP	44	330366	330547, 330548, 330720	330137	330244	
	D	07/06-	Z 10 XEP	44		330720, 330721	330137		
1.0 i 12V	B (73_, 78_, 79_)	11/96-09/00	X 10 XE	40	330366	330034	330085, 330137, 330220, 330225, 330277	330244	
1.2	A Box	02/86-04/89	12 NC, E 12 GV	33	330011, 330363, 330364	330034	330085, 330277, 330303	330235, 330244	

OPS Oil Pressure Switches **BLS** Brake Light Switches **TT-RF** Temperature Transmitter and Radiator Fan Switches **RLS** Reverse Light Switches **VAR** Various

ERA S.p.A. Moncalieri (TO) Italy - tel: +39 011 6891511 - fax: +39 011 6472862 - www.eranet.it

Vehicle		Date	Engine	kW	OPS	BLS	TT-RF	RLS	VAR
1.2	A Hatchback (93_, 94_, 98_, 99_)	09/82-08/90	12 NC, E 12 GV	33	330011, 330363, 330364	330034	330085, 330277, 330303	330235, 330244	
	A Box	02/86-04/89	12 ST	40	330011, 330363, 330364	330034	330085, 330277, 330303	330235, 330244	
	A Box	02/86-07/90	12 S	44	330011, 330363, 330364	330034	330085, 330277, 330303	330235, 330244	
	A Hatchback (93_, 94_, 98_, 99_)	09/82-08/90	12 S	44	330011, 330363, 330364	330034	330085, 330277, 330303	330235, 330244	
	D	06/10-	A 12 XEL	51		330720, 330721			
	C (F08, F68)	09/00-	Z 12 XE	55	330366	330431, 330547, 330548, 330720	330137	330244	
	C Box (F08, W5L)	07/05-	Z 12 XEP	59	330366	330547, 330548, 330720	330137	330244	
	D	07/06-	Z 12 XEP	59		330720, 330721	330137		
	D	06/10-	A 12 XER	63		330720, 330721			
1.2 16V	C Box (F08, W5L)	09/00-	Z 12 XE	55	330366	330431, 330547, 330548, 330720	330137	330244	
1.2 i	A Hatchback (93_, 94_, 98_, 99_)	09/89-03/93	C 12 NZ	33	330363, 330364	330034	330085, 330116, 330277, 330303	330235, 330244	
	A TR (91_, 92_, 96_, 97_)	09/89-03/93	C 12 NZ	33	330363, 330364	330034	330085, 330116, 330277, 330303	330235, 330244	
	B (73_, 78_, 79_)	03/93-09/00	C 12 NZ, X 12 SZ	33	330363, 330364	330034	330085, 330116, 330137, 330225, 330277	330244	
	B (73_, 78_, 79_)	03/93-09/00	12 NZ	33	330363, 330364	330034	330085, 330116, 330137, 330225, 330277	330244	
1.2 i 16V	B (73_, 78_, 79_)	03/98-09/00	X 12 XE	48	330366	330034	330085, 330137, 330220, 330277	330244	
1.2 LPG	D	09/09-	Z 12 XEP	59		330720, 330721			
1.2 N	A TR (91_, 92_, 96_, 97_)	01/85-10/87	12 NC, E 12 GV	33	330011, 330363, 330364	330034	330085, 330277, 330303	330235, 330244	
	A Hatchback (93_, 94_, 98_, 99_)	01/90-03/93	12 NV	38	330363, 330364	330034	330085, 330277, 330303	330235, 330244	
1.2 S	A Hatchback (93_, 94_, 98_, 99_)	09/82-02/90	12 ST	40	330011, 330363, 330364	330034	330085, 330277, 330303	330235, 330244	
	A TR (91_, 92_, 96_, 97_)	09/82-03/93	12 ST	40	330011, 330363, 330364	330034	330085, 330277, 330303	330235, 330244	
	A TR (91_, 92_, 96_, 97_)	09/82-10/87	12 S	43	330363				
1.2 Twinport	C (F08, F68)	07/04-	Z 12 XEP	59	330366	330547, 330548, 330720	330137	330244	
1.3	A Box	02/86-04/89	13 NB	44	330011, 330363, 330364	330034	330085, 330277, 330303	330235, 330244	
	A Hatchback (93_, 94_, 98_, 99_)	09/85-10/89	13 NB	44	330011, 330363, 330364	330034	330085, 330277, 330303	330235, 330244	
	A TR (91_, 92_, 96_, 97_)	09/85-10/87	13 NB	44	330011, 330363, 330364	330034	330085, 330277, 330303	330235, 330244	
	A Box	02/86-04/89	13 SB	51	330011, 330363, 330364	330034	330085, 330277, 330303	330235, 330244	
1.3 CDTI	C (F08, F68)	06/03-	Z 13 DT	51		330547, 330548, 330720	330142	330244	
	D	07/06-	Z 13 DTJ	55		330720, 330721	330142		
	D	07/06-	Z 13 DTH	66		330720, 330721	330142		
	D	06/10-	Z 13 DTE	70		330720, 330721			

OPS Oil Pressure Switches **BLS** Brake Light Switches **TT-RF** Temperature Transmitter and Radiator Fan Switches **RLS** Reverse Light Switches **VAR** Various

Vehicle		Date	Engine	kW	OPS	BLS	TT-RF	RLS	VAR
1.3 CDTI 16V	C Box (F08, W5L)	08/05-	Z 13 DT	51		330547, 330548, 330720	330142	330244	
1.3 GL	A Hatchback (93_, 94_, 98_, 99_)	09/82-03/93	13 S	55	330011, 330364	330034	330085, 330277, 330303	330235, 330244	
	A TR (91_, 92_, 96_, 97_)	09/82-03/93	13 S	55	330011, 330364	330034	330085, 330277, 330303	330235, 330244	
1.3 i	A Hatchback (93_, 94_, 98_, 99_)	09/86-09/90	C 13 N	44	330016, 330363	330034	330085, 330107, 330277, 330303	330235, 330244	
1.3 S	A Hatchback (93_, 94_, 98_, 99_)	09/82-10/89	13 SB	51	330011, 330363, 330364	330034	330085, 330277, 330303	330235, 330244	
	A TR (91_, 92_, 96_, 97_)	09/82-10/87	13 SB	51	330011, 330363, 330364	330034	330085, 330277, 330303	330235, 330244	
1.4	D	09/09-	A 14 XEL	64		330720, 330721			
	C (F08, F68)	09/00-	Z 14 XE	66	330363, 330364	330431, 330547, 330548, 330720	330137	330244	
	C Box (F08, W5L)	08/03-	Z 14 XEP	66	330366	330547, 330548, 330720	330137	330244	
	D	06/10-	A 14 XER	74		330720, 330721			
1.4 i	A Hatchback (93_, 94_, 98_, 99_)	01/85-03/93	C 14 NZ	40	330363				
	A Hatchback (93_, 94_, 98_, 99_)	01/90-03/93	C 14 NZ	44	330016, 330363	330034	330085, 330116, 330277, 330303	330235, 330244	
	A TR (91_, 92_, 96_, 97_)	10/89-03/93	C 14 NZ	44	330016, 330363	330034	330085, 330116, 330277, 330303	330235, 330244	
	B (73_, 78_, 79_)	03/93-09/00	C 14 NZ, X 14 SZ	44	330363, 330364	330034	330085, 330116, 330137, 330225, 330277	330244	
	B Box (73_)	08/99-09/00	X 14 SZ	44	330363, 330364	330034	330116, 330137, 330225, 330277	330244	
1.4 i 16V	B (73_, 78_, 79_)	08/97-09/00	C 14 SEL	63	330363, 330364	330034	330085, 330126, 330137, 330225, 330277	330244	
	B (73_, 78_, 79_)	09/94-09/00	X 14 XE	66	330363, 330364	330034	330085, 330116, 330126, 330137, 330225, 330277	330244	
1.4 LPG	D	07/06-	Z 14 XEP	66		330720, 330721	330137		
1.4 S	A Hatchback (93_, 94_, 98_, 99_)	01/90-03/93	14 NV	53	330363, 330364	330034	330085, 330277, 330303	330235, 330244	
	A TR (91_, 92_, 96_, 97_)	09/89-03/93	14 NV	53	330363, 330364	330034	330085, 330277, 330303	330235, 330244	
1.4 Si	A Hatchback (93_, 94_, 98_, 99_)	09/91-03/93	C 14 SE	60	330363, 330364	330034	330085, 330116, 330277, 330303	330235, 330244	
	B (73_, 78_, 79_)	03/93-09/00	C 14 SE	60	330363, 330364	330034	330085, 330116, 330137, 330225, 330277	330244	
1.4 Twinport	C (F08, F68)	06/03-	Z 14 XEP	66	330366	330547, 330548, 330720	330137	330244	
1.5 D	A Box	06/87-04/89	15 D (4EC1)	37	330007	330034	330085, 330210, 330299, 330304	330235, 330244	
	A Hatchback (93_, 94_, 98_, 99_)	09/87-03/93	15 D (4EC1)	37	330007	330034	330085, 330210, 330299, 330304	330235, 330244	
	A TR (91_, 92_, 96_, 97_)	10/87-11/92	15 D (4EC1)	37	330007	330034	330085, 330210, 330299, 330304	330235, 330244	
	B (73_, 78_, 79_)	03/93-09/00	15 D (4EC1)	37	330007	330034	330085, 330298	330244	
1.5 TD	A Hatchback (93_, 94_, 98_, 99_)	03/88-03/93	15 DT (T4EC1)	49	330007	330034	330085, 330210, 330299, 330304	330235, 330244	

OPS Oil Pressure Switches **BLS** Brake Light Switches **TT-RF** Temperature Transmitter and Radiator Fan Switches **RLS** Reverse Light Switches **VAR** Various

ERA S.p.A. Moncalieri (TO) Italy - tel: +39 011 6891511 - fax: +39 011 6472862 - www.eranet.it

Vehicle		Date	Engine	kW	OPS	BLS	TT-RF	RLS	VAR
1.5 TD	A TR (91_, 92_, 96_, 97_)	10/87-03/93	15 DT (T4EC1)	49	330007	330034	330085, 330210, 330299, 330304	330235, 330244	
	B (73_, 78_, 79_)	03/93-09/00	15 DT (T4EC1), X 15 DT (T4EC1)	49	330007	330034	330085, 330299	330244	
1.6	C (F08, F68)	08/05-07/06	Z 16 YNG	71		330720			
	C Box (F08, W5L)	08/05-	Z 16 YNG	71	330364	330547, 330548, 330720	330137	330244	
1.6 GSI	A Hatchback (93_, 94_, 98_, 99_)	08/88-09/92	C 16 NZ	55	330016, 330363	330034	330085, 330107, 330116, 330277, 330303	330235, 330244	
	A Hatchback (93_, 94_, 98_, 99_)	05/88-03/92	E 16 SE	74	330363, 330364	330034	330085, 330116, 330277, 330303	330235, 330244	
1.6 GSI 16V	B (73_, 78_, 79_)	03/93-09/00	C 16 XE	80	330363, 330364	330034	330085, 330116, 330126, 330225, 330277	330244	
1.6 GSI CAT	A Hatchback (93_, 94_, 98_, 99_)	02/92-03/93	C 16 SE	74	330363, 330364	330034	330085, 330277, 330303	330235, 330244	
1.6 i 16V	B (73_, 78_, 79_)	08/97-09/00	C 16 SEL	74	330363, 330364	330034	330085, 330126, 330137, 330225, 330277	330244	
	B (73_, 78_, 79_)	09/94-09/00	X 16 XE	78	330363, 330364	330034	330085, 330116, 330126, 330137, 330225, 330277	330244	
1.6 Turbo	D	02/07-	Z 16 LEL	110		330720, 330721			
	D	02/07-	Z 16 LER	141		330720, 330721			
1.7 CDTI	C (F08, F68)	06/03-	Z 17 DTH	74	330007	330547, 330548, 330720	330137	330244	
1.7 CDTi	C Box (F08, W5L)	08/03-	Z 17 DTH	74		330720			
1.7 CDTI	D	07/06-	Z 17 DTR	92		330720, 330721	330137		
	D	06/10-	A 17 DTS	96		330720, 330721			
1.7 D	B (73_, 78_, 79_)	02/96-09/00	17 D (4EE1), X 17 D (4EE1)	44	330007	330034	330085, 330298	330244	
	B Box (73_)	08/99-09/00	17 D (4EE1), X 17 D (4EE1)	44	330007	330034	330085, 330298	330244	
1.7 DI	C (F08, F68)	09/00-	Y 17 DTL	48	330007	330431, 330547, 330548, 330720	330117	330244	
1.7 DI 16V	C Box (F08, W5L)	09/00-	Y 17 DTL	48	330007	330431, 330547, 330548, 330720	330117	330244	
1.7 DTi	B Box (73_)	08/01-	Y 17 DT	55		330720			
1.7 DTI	C (F08, F68)	09/00-	Y 17 DT	55	330007	330431, 330547, 330548, 330720	330117	330244	
1.7 DTI 16V	C Box (F08, W5L)	09/00-	Y 17 DT	55	330007	330431, 330547, 330548, 330720	330117	330244	
1.8	C (F08, F68)	09/00-	Z 18 XE	92	330363, 330364	330431, 330547, 330548, 330720	330509	330244	
FRONTERA		**03/92 -**							
2.0 i	A Sport (5_SUD2)	03/92-10/98	C 20 NE, X 20 SE	85		330429	330085, 330116, 330217		
2.2 DTI	B (6B_)	10/98-09/02	X 22 DTH, Y 22 DTH	85	330364, 330365	330701	330085, 330137		
	B (6B_)	09/02-	Y 22 DTH	88	330364	330701	330085, 330137		
2.2 i	A (5_MWL4)	03/95-10/98	X 22 XE	100		330429	330116, 330217		
	B (6B_)	10/98-	X 22 SE, Y 22 SE	100	330364	330701	330107		

OPS Oil Pressure Switches **BLS** Brake Light Switches **TT-RF** Temperature Transmitter and Radiator Fan Switches **RLS** Reverse Light Switches **VAR** Various

Vehicle		Date	Engine	kW	OPS	BLS	TT-RF	RLS	VAR
2.3 TD	A (5_MWL4)	03/92-10/98	23 DTR	74		330429	330085, 330310		
2.4 i	A (5_MWL4)	03/92-10/98	C 24 NE	92		330429	330085, 330116		
2.5 TDS	A (5_MWL4)	09/96-10/98	25TDS (VM41B)	85		330429	330085, 330121		
	A Sport (5_SUD2)	09/96-10/98	25TDS (VM41B)	85		330429	330085, 330121		
2.8 TD	A (5_MWL4)	03/95-10/98	28 TDI (4JB1T)	83		330429	330085		
	A Sport (5_SUD2)	03/95-08/96	28 TDI (4JB1T)	83		330429	330085		
3.2 i	B (6B_)	10/98-	6 VD1, Y 32 NE	151	330007, 330363	330701	330100, 330117		
GT			**06/07 -**						
2.0	Convertible	06/07-	Z 20 NHH	194			330107		
KADETT			**08/79 - 07/94**						
1.2	D (31_-34_, 41_-44_)	08/82-08/84	12 ST	40		330429	330085, 330276, 330277, 330303	330235, 330244	
	E (39_, 49_)	09/84-07/86	12 SC	40	330363	330429	330085, 330172, 330276, 330277, 330303	330235, 330244	
	E Box (37_, 47_)	09/84-07/86	12 SC	40	330363	330429	330085, 330172, 330276, 330277, 330303	330235, 330244	
	E Estate (35_, 36_, 45_, 46_)	09/84-07/86	12 SC	40	330363	330429	330085, 330172, 330276, 330277, 330303	330235, 330244	
	E Hatchback (33_, 34_, 43_, 44_)	09/84-07/86	12 SC	40	330363	330429	330085, 330172, 330276, 330277, 330303	330235, 330244	
1.3 i CAT	E (39_, 49_)	09/85-08/91	C 13 N	44	330363	330429	330085, 330107, 330276, 330277, 330303	330235, 330244	
	E Estate (35_, 36_, 45_, 46_)	09/85-08/91	C 13 N	44	330363	330429	330085, 330107, 330276, 330277, 330303	330235, 330244	
	E Hatchback (33_, 34_, 43_, 44_)	09/85-08/91	C 13 N	44	330363	330429	330085, 330107, 330276, 330277, 330303	330235, 330244	
1.3 N	E (39_, 49_)	09/84-08/89	13 N, 13 NB	44	330363	330429	330085, 330276, 330277, 330303	330235, 330244	
	E Box (37_, 47_)	09/84-07/89	13 N, 13 NB	44	330363	330429	330085, 330276, 330277, 330303	330235, 330244	
	E Combo (38_, 48_)	01/86-12/89	13 N	44	330363	330429	330085, 330276, 330277, 330303	330235, 330244	
	E Estate (35_, 36_, 45_, 46_)	09/84-08/91	13 N	44	330363	330429	330085, 330276, 330277, 330303	330235, 330244	
	E Hatchback (33_, 34_, 43_, 44_)	09/84-08/91	13 N, 13 NB	44	330363	330429	330085, 330276, 330277, 330303	330235, 330244	
1.3 S	E (39_, 49_)	09/84-08/87	13 S	55	330363	330429	330085, 330276, 330277, 330303	330235, 330244	
	E Combo (38_, 48_)	01/86-12/89	13 S	55	330363	330429	330085, 330276, 330277, 330303	330235, 330244	
	E Convertible (43B_)	03/87-02/93	13 S	55	330363	330429	330085, 330276, 330277, 330303	330235, 330244	
	E Estate (35_, 36_, 45_, 46_)	09/84-08/87	13 S	55	330363	330429	330085, 330276, 330277, 330303	330235, 330244	

OPS Oil Pressure Switches **BLS** Brake Light Switches **TT-RF** Temperature Transmitter and Radiator Fan Switches **RLS** Reverse Light Switches **VAR** Various

ERA S.p.A. Moncalieri (TO) Italy - tel: +39 011 6891511 - fax: +39 011 6472862 - www.eranet.it

Vehicle		Date	Engine	kW	OPS	BLS	TT-RF	RLS	VAR
1.3 S	E Hatchback (33_, 34_, 43_, 44_)	09/84-08/87	13 S	55		330429	330085, 330276, 330277, 330303	330235, 330244	
1.4 i	E (39_, 49_)	01/90-08/91	C 14 NZ	44	330363	330429	330085, 330116, 330277	330235, 330244	
	E Box (37_, 47_)	01/90-08/91	C 14 NZ	44	330363	330429	330085, 330116, 330277	330235, 330244	
	E Combo (38_, 48_)	08/91-07/94	C 14 NZ	44	330363	330429	330085, 330116, 330277	330235, 330244	
	E Convertible (43B_)	01/90-08/91	C 14 NZ	44	330363	330429	330085, 330116, 330277	330235, 330244	
	E Estate (35_, 36_, 45_, 46_)	01/90-08/91	C 14 NZ	44	330363	330429	330085, 330116, 330277	330235, 330244	
	E Hatchback (33_, 34_, 43_, 44_)	01/90-08/91	C 14 NZ	44	330363	330429	330085, 330116, 330277	330235, 330244	
1.4 S	E (39_, 49_)	01/90-08/91	14 NV	55	330363	330429	330085, 330277	330235, 330244	
	E Combo (38_, 48_)	07/89-08/91	14 NV	55	330363	330429	330085, 330277	330235, 330244	
	E Convertible (43B_)	08/90-02/93	14 NV	55	330363	330429	330085, 330277	330235, 330244	
	E Estate (35_, 36_, 45_, 46_)	01/90-08/91	14 NV	55	330363	330429	330085, 330277	330235, 330244	
	E Hatchback (33_, 34_, 43_, 44_)	01/90-08/91	14 NV	55	330363	330429	330085, 330277	330235, 330244	
1.5 TD	E (39_, 49_)	07/88-08/91	15 DT (T4EC1)	53	330007	330429	330210, 330300	330235, 330244	
	E Estate (35_, 36_, 45_, 46_)	07/88-08/91	15 DT (T4EC1)	53	330007	330429	330210, 330300	330235, 330244	
	E Hatchback (33_, 34_, 43_, 44_)	07/88-08/91	15 DT (T4EC1)	53	330007	330429	330210, 330300	330235, 330244	
1.6	E Combo (38_, 48_)	09/86-12/91	16 SV	60	330363	330429	330085, 330276, 330277, 330303	330235, 330244	
	E Estate (35_, 36_, 45_, 46_)	09/86-08/91	16 SV	60	330363	330429	330085, 330276, 330277, 330303	330235, 330244	
1.6 D	E (39_, 49_)	09/84-01/89	16 D, 16 DA	40	330363	330429	330085, 330276, 330303	330235, 330244	
	E Box (37_, 47_)	08/84-08/88	16 D, 16 DA	40	330363	330429	330085, 330276, 330303	330235, 330244	
	E Combo (38_, 48_)	01/86-12/89	16 DA	40	330363	330429	330085, 330276, 330303	330235, 330244	
	E Estate (35_, 36_, 45_, 46_)	09/84-01/89	16 D, 16 DA	40	330363	330429	330085, 330276, 330303	330235, 330244	
	E Hatchback (33_, 34_, 43_, 44_)	09/84-01/89	16 D, 16 DA	40	330363	330429	330085, 330276, 330303	330235, 330244	
1.6 i	E (39_, 49_)	09/86-08/91	E 16 NZ	55	330363	330429	330085, 330116, 330276, 330277, 330303	330235, 330244	
	E Box (37_, 47_)	08/89-09/93	C 16 NZ	55	330363	330429	330085, 330116, 330276, 330277, 330303	330235, 330244	
	E Combo (38_, 48_)	08/91-07/94	C 16 NZ	55	330363				
	E Convertible (43B_)	10/86-02/93	E 16 NZ	55	330363	330429	330085, 330116, 330276, 330277, 330303	330235, 330244	
	E Estate (35_, 36_, 45_, 46_)	09/86-08/91	E 16 NZ	55	330363	330429	330085, 330116, 330276, 330277, 330303	330235, 330244	
	E Hatchback (33_, 34_, 43_, 44_)	09/86-08/91	E 16 NZ	55		330429	330085, 330116, 330276, 330277, 330303	330235, 330244	

OPS Oil Pressure Switches **BLS** Brake Light Switches **TT-RF** Temperature Transmitter and Radiator Fan Switches **RLS** Reverse Light Switches **VAR** Various

Vehicle		Date	Engine	kW	OPS	BLS	TT-RF	RLS	VAR
1.6 i	E Convertible (43B_)	07/89-02/93	16 SV	60	330363	330429	330085, 330276, 330277, 330303	330235, 330244	
1.6 i CAT	E (39_, 49_)	09/86-08/91	C 16 LZ, C 16 NZ	55	330363	330429	330085, 330107, 330116, 330276, 330277, 330303	330235, 330244	
	E Convertible (43B_)	10/87-02/93	C 16 LZ, C 16 NZ	55	330363	330429	330085, 330107, 330116, 330276, 330277, 330303	330235, 330244	
	E Estate (35_, 36_, 45_, 46_)	09/86-08/91	C 16 LZ, C 16 NZ	55	330363	330429	330085, 330107, 330116, 330276, 330277, 330303	330235, 330244	
	E Hatchback (33_, 34_, 43_, 44_)	09/86-08/91	C 16 LZ, C 16 NZ	55	330363	330429	330085, 330107, 330116, 330276, 330277, 330303	330235, 330244	
1.6 S	E (39_, 49_)	09/86-08/91	16 SV	60	330363	330429	330085, 330276, 330277, 330303	330235, 330244	
	E Hatchback (33_, 34_, 43_, 44_)	09/86-08/91	16 SV	60	330363	330429	330085, 330276, 330277, 330303	330235, 330244	
1.7 D	E (39_, 49_)	02/89-08/91	17 D	42	330363	330429	330085, 330276, 330303	330235, 330244	
	E Box (37_, 47_)	08/88-09/92	17 D	42	330363	330429	330085, 330276, 330303	330235, 330244	
	E Combo (38_, 48_)	01/89-07/94	17 D	42	330363	330429	330085, 330276, 330303	330235, 330244	
	E Estate (35_, 36_, 45_, 46_)	02/89-08/91	17 D	42	330363	330429	330085, 330276, 330303	330235, 330244	
	E Hatchback (33_, 34_, 43_, 44_)	02/89-08/91	17 D	42	330363	330429	330085, 330276, 330303	330235, 330244	
	E Combo (38_, 48_)	07/92-07/94	17 DR	44	330363				
1.8 E	E Estate (35_, 36_, 45_, 46_)	10/85-08/86	C 18 NE	74	330363	330429	330085, 330116, 330303	330235, 330244	
	E Hatchback (33_, 34_, 43_, 44_)	10/85-08/86	C 18 NE	74		330429	330085, 330116, 330303	330235, 330244	
1.8 GSI	E Hatchback (33_, 34_, 43_, 44_)	09/84-08/86	18 E	85		330429	330085, 330116, 330303	330235, 330244	
1.8 i	E (39_, 49_)	09/90-08/91	C 18 NT, C 18 NZ	66	330363, 330364	330429	330085, 330116, 330276, 330277, 330303	330235, 330244	
	E Box (37_, 47_)	08/84-09/92	C 18 NT	66	330363	330429	330085, 330116	330235, 330244	
	E Estate (35_, 36_, 45_, 46_)	06/85-08/91	C 18 NT, C 18 NZ	66	330363, 330364	330429	330085, 330116, 330276, 330277, 330303	330235, 330244	
	E Hatchback (33_, 34_, 43_, 44_)	06/85-08/91	C 18 NT, C 18 NZ, S 18 NV	66	330363, 330364	330429	330085, 330116, 330276, 330277, 330303	330235, 330244	
	E (39_, 49_)	10/85-08/86	C 18 NE	74		330429	330085, 330116, 330303	330235, 330244	
	E (39_, 49_)	09/84-08/86	18 E	85		330429	330085, 330116, 330303	330235, 330244	
	E Estate (35_, 36_, 45_, 46_)	09/84-08/86	18 E	85		330429	330085, 330116, 330303	330235, 330244	
1.8 S	E (39_, 49_)	09/87-08/91	E 18 NV	62	330363	330429	330085, 330116, 330276, 330277, 330303	330235, 330244	
	E Estate (35_, 36_, 45_, 46_)	09/87-08/91	E 18 NV	62	330363	330429	330085, 330116, 330276, 330277, 330303	330235, 330244	

OPS Oil Pressure Switches **BLS** Brake Light Switches **TT-RF** Temperature Transmitter and Radiator Fan Switches **RLS** Reverse Light Switches **VAR** Various

ERA S.p.A. Moncalieri (TO) Italy - tel: +39 011 6891511 - fax: +39 011 6472862 - www.eranet.it

Vehicle		Date	Engine	kW	OPS	BLS	TT-RF	RLS	VAR
1.8 S	E Hatchback (33_, 34_, 43_, 44_)	09/87-08/91	E 18 NV, S 18 NV	62	330363	330429	330085, 330116, 330276, 330277, 330303	330235, 330244	
2.0 GSI	E Hatchback (33_, 34_, 43_, 44_)	09/86-08/91	20 NE	85	330363	330429	330085, 330116, 330276	330235, 330244	
	E Hatchback (33_, 34_, 43_, 44_)	09/86-08/91	20 SEH	95	330363	330429	330085, 330116, 330276	330235, 330244	
2.0 GSI 16V	E Hatchback (33_, 34_, 43_, 44_)	12/87-08/91	20 XE	115	330011, 330364	330429	330085, 330116, 330276, 330277, 330303	330235, 330244	
2.0 GSI 16V CAT	E Hatchback (33_, 34_, 43_, 44_)	03/88-08/91	C 20 XE	110		330429	330085, 330116, 330276	330235, 330244	
2.0 GSI CAT	E Hatchback (33_, 34_, 43_, 44_)	09/86-08/91	C 20 NE	85		330429	330085, 330116, 330276	330235, 330244	
2.0 i	E (39_, 49_)	03/87-08/91	20 NE	85	330363	330429	330085, 330116, 330276	330235, 330244	
	E Convertible (43B_)	10/86-02/93	20 NE	85	330363	330429	330085, 330116, 330276	330235, 330244	
	E Estate (35_, 36_, 45_, 46_)	09/87-08/91	20 NE	85	330363	330429	330085, 330116, 330276	330235, 330244	
2.0 i CAT	E (39_, 49_)	03/87-08/91	C 20 NE	85	330363	330429	330085, 330116, 330276	330235, 330244	
	E Convertible (43B_)	10/86-02/93	C 20 NE	85	330363	330429	330085, 330116, 330276	330235, 330244	
	E Estate (35_, 36_, 45_, 46_)	09/87-08/91	C 20 NE	85	330363	330429	330085, 330116, 330276	330235, 330244	
MANTA		**09/75 - 08/88**							
1.3 N	B (58_, 59_)	03/79-12/80	13 N	44	330011	330034	330085		
1.3 S	B (58_, 59_)	08/81-08/86	13 S	55	330011	330034	330085		
1.6 S	B (58_, 59_)	09/75-12/81	16 S	55	330011	330034	330085		
1.9 N	B (58_, 59_)	08/76-12/81	19 N	55	330011	330034	330085		
2.0	B (58_, 59_)	08/77-12/80	20 N	66	330011	330034	330085		
MERIVA		**05/03 -**							
1.3 CDTI		04/05-05/10	Z 13 DT	51		330547, 330548, 330720	330142	330244	
		09/03-05/10	Z 13 DTJ	55		330547, 330548, 330720	330142	330244	
	B	06/10-	A 13 DTC	55		330721			
	B	06/10-	A 13 DTE	70		330721			
1.4	B	06/10-	A 14 XER	74		330721			
	B	06/10-	A 14 NEL	88		330721			
	B	06/10-	A 14 NET	103		330721			
1.4 16V Twinport		07/04-05/10	Z 14 XEP	66	330366	330547, 330548, 330720	330137	330244	
1.6		05/03-05/10	Z 16 SE	64	330363, 330364	330547, 330548, 330720	330137	330244	
		01/06-05/10	Z 16 XEP	77	330366	330547, 330548, 330720	330137	330244	
1.6 16V		05/03-05/10	Z 16 XE	74	330363, 330364	330547, 330548, 330720	330137	330244	

OPS Oil Pressure Switches **BLS** Brake Light Switches **TT-RF** Temperature Transmitter and Radiator Fan Switches **RLS** Reverse Light Switches **VAR** Various

Vehicle		Date	Engine	kW	OPS	BLS	TT-RF	RLS	VAR
1.6 Turbo		09/05-05/10	Z 16 LET	132	330366	330547, 330548, 330720		330244	
1.7 CDTI		09/03-05/10	Z 17 DTH	74	330007	330547, 330548, 330720	330137	330244	
	B	06/10-	A 17 DT	74		330721			
	B	06/10-	A 17 DTC	81		330721			
		09/06-05/10	Z 17 DTR	92		330547, 330548, 330720	330137	330244	
	B	06/10-	A 17 DTS	96		330721			
1.7 DTI		09/03-05/10	Y 17 DT	55	330007	330547, 330548, 330720	330117	330244	
1.8		05/03-05/10	Z 18 XE	92	330363, 330364	330547, 330548, 330720	330509	330244	
MONTEREY			**09/91 - 08/99**						
3.0 DTI	B	07/98-08/99	4 JX1	117		330044, 330701	330117		
3.1 TD	A (UBS_)	09/91-07/98	4 JG2TC	84	330008	330044, 330701	330642		
3.2	A (UBS_)	06/92-07/98	6VD1	130	330007	330044, 330701	330100, 330117		
3.5 V6 24V	B	07/98-08/99	6 VE1	158	330007	330044, 330701	330100, 330117		
MOVANO			**07/98 -**						
1.9 DTI	Box (F9)	09/00-10/01	F9Q 770	59	330027, 330340	330707, 330708	330181, 330692	330248	
	Combi (J9)	09/00-10/01	F9Q 770	59	330027, 330340	330707, 330708	330181, 330692	330248	
	Box (F9)	10/01-	F9Q 774	60	330027, 330340	330707, 330708	330692	330248	
	Combi (J9)	10/01-	F9Q 774	60	330027, 330340	330707, 330708	330692	330248	
2.2 DTI	Box (F9)	09/00-	G9T 720	66	330018, 330340, 330698	330707, 330708	330692	330248	
	Combi (J9)	09/00-	G9T 720	66	330018, 330340, 330698	330707, 330708	330692	330248	
	Dumptruck (H9)	09/00-	G9T 720	66	330018, 330340, 330698	330707, 330708	330692	330248	
	Flatbed / Chassis (U9, E9)	09/00-	G9T 720	66	330018, 330340, 330698	330707, 330708	330692	330248	
2.5 CDTI	Box (F9)	08/06-	G9U 650	74	330340, 330698	330707, 330708	330558, 330692	330248	
	Combi (J9)	09/07-	G9U 650	74	330698	330707, 330708	330558, 330692		
	Dumptruck (H9)	08/06-	G9U 650	74	330340, 330698	330707, 330708	330558, 330692	330248	
	Flatbed / Chassis (U9, E9)	08/06-	G9U 650	74	330340, 330698	330707, 330708	330558, 330692	330248	
	Box (F9)	08/06-	G9U 650	88	330340, 330698	330707, 330708	330558, 330692	330248	
	Combi (J9)	08/06-	G9U 632	88	330340, 330698	330707, 330708	330558, 330692	330248	
	Dumptruck (H9)	08/06-	G9U 632	88	330340, 330698	330707, 330708	330558, 330692	330248	
	Flatbed / Chassis (U9, E9)	08/06-	G9U 632	88	330340, 330698	330707, 330708	330558, 330692	330248	
	Box (F9)	08/06-	G9U 650	107	330340, 330698	330707, 330708	330692	330248	
	Combi (J9)	08/06-	G9U 650	107	330340, 330698	330707, 330708	330692	330248	
	Dumptruck (H9)	08/06-	G9U 650	107	330340, 330698	330707, 330708	330692	330248	
	Flatbed / Chassis (U9, E9)	08/06-	G9U 650	107	330340, 330698	330707, 330708	330692	330248	
2.5 D	Box (F9)	01/99-09/00	S8U 770	59	330340	330707, 330708	330132, 330138, 330181	330248	

OPS Oil Pressure Switches **BLS** Brake Light Switches **TT-RF** Temperature Transmitter and Radiator Fan Switches **RLS** Reverse Light Switches **VAR** Various

ERA S.p.A. Moncalieri (TO) Italy - tel: +39 011 6891511 - fax: +39 011 6472862 - www.eranet.it

Vehicle		Date	Engine	kW	OPS	BLS	TT-RF	RLS	VAR
2.5 D	Combi (J9)	07/98-09/00	S8U 770	59	330340	330707, 330708	330132, 330138, 330181	330248	
	Dumptruck (H9)	01/99-09/00	S8U 770	59	330340	330707, 330708	330132, 330138, 330181	330248	
	Flatbed / Chassis (U9, E9)	07/98-09/00	S8U 770	59	330340	330707, 330708	330132, 330138, 330181	330248	
2.5 DTi	Box (F9)	10/03-	G9U 754	73	330340, 330630, 330698	330707, 330708	330692	330248	
2.5 DTI	Dumptruck (H9)	10/03-	G9U 754	73	330340, 330630, 330698	330707, 330708	330692	330248	
2.5 DTi	Flatbed / Chassis (U9, E9)	10/03-	G9U 754	73	330340, 330630, 330698	330707, 330708	330692	330248	
2.5 DTI	Box (F9)	10/01-	G9U 754	84	330018, 330340, 330630, 330698	330707, 330708	330692	330248	
	Combi (J9)	10/01-	G9U 720, G9U 724	84	330018, 330340, 330698	330707, 330708	330692	330248	
	Flatbed / Chassis (U9, E9)	10/01-	G9U 754	84	330018, 330340, 330630, 330698	330707, 330708	330692	330248	
2.8 DTI	Box (F9)	01/99-10/01	S9W 702	84	330340	330707, 330708	330120, 330132, 330138, 330181, 330219, 330311	330248	
	Combi (J9)	07/98-10/01	S9W 702	84	330340	330707, 330708	330120, 330132, 330138, 330181, 330219, 330311	330248	
	Dumptruck (H9)	01/99-10/01	S9W 702	84	330340	330707, 330708	330132, 330138, 330181, 330219, 330311	330248	
	Flatbed / Chassis (U9, E9)	07/98-10/01	S9W 702	84	330340	330707, 330708	330132, 330138, 330181, 330219, 330311	330248	
3.0 DTI	Box (F9)	10/03-	ZD3 200	100	330340, 330697	330707, 330708		330248	
3.0 DTi	Combi (J9)	10/03-	ZD3 200	100	330340, 330697	330707, 330708		330248	
3.0 DTI	Flatbed / Chassis (U9, E9)	10/03-	ZD3 200	100	330340, 330697	330707, 330708		330248	
OMEGA			**09/86 - 07/03**						
1.8	A (16_, 17_, 19_)	09/87-03/94	E 18 NVR	65	330364	330034, 330435	330085, 330116, 330303	330252	
	A Estate (66_, 67_)	09/87-03/94	E 18 NVR	65	330364	330034, 330435	330085, 330116, 330303	330252	
	A (16_, 17_, 19_)	09/86-03/94	18 SEH	85	330364	330034, 330435	330085, 330116, 330303	330252	
	A Estate (66_, 67_)	09/86-03/94	18 SEH	85	330364	330034, 330435	330085, 330116, 330303	330252	
1.8 N	A (16_, 17_, 19_)	09/86-08/87	18 NV	60	330364	330034, 330435	330085, 330116, 330303	330252	
	A Estate (66_, 67_)	09/86-08/87	18 NV	60	330364	330034, 330435	330085, 330116, 330303	330252	
1.8 S	A (16_, 17_, 19_)	09/86-03/94	18 SV	66	330364	330034, 330435	330085, 330116, 330303	330252	
	A Estate (66_, 67_)	09/86-03/94	18 SV	66	330364	330034, 330435	330085, 330116, 330303	330252	
2.0	B (25_, 26_, 27_)	03/94-09/99	X 20 SE	85	330363, 330364	330065, 330068, 330431, 330548	330085, 330116, 330220, 330277, 330300	330252	

OPS Oil Pressure Switches **BLS** Brake Light Switches **TT-RF** Temperature Transmitter and Radiator Fan Switches **RLS** Reverse Light Switches **VAR** Various

Vehicle		Date	Engine	kW	OPS	BLS	TT-RF	RLS	VAR
2.0	B (25_, 26_, 27_)	03/94-12/00	20 SE	85	330363, 330364	330065, 330068, 330431, 330548	330085, 330116, 330220, 330277, 330300	330252	
	B Estate (21_, 22_, 23_)	03/94-09/99	X 20 SE	85	330363, 330364	330065, 330068, 330431, 330548	330085, 330116, 330220, 330277, 330300	330252	
	A (16_, 17_, 19_)	09/86-03/94	20 SE	90	330364	330034, 330435	330085, 330116, 330126, 330303	330252	
	A Estate (66_, 67_)	09/86-03/94	20 SE	90	330364	330034, 330435	330085, 330116, 330126, 330303	330252	
2.0 16V	B (25_, 26_, 27_)	03/94-09/99	X 20 XEV	100	330363, 330364	330065, 330068, 330431, 330548	330085, 330126, 330220, 330277, 330300, 330528, 330651	330252	
	B Estate (21_, 22_, 23_)	03/94-09/99	X 20 XEV	100	330363, 330364	330065, 330068, 330431, 330548	330085, 330126, 330220, 330277, 330300, 330528, 330651	330252	
2.0 DTI 16V	B (25_, 26_, 27_)	09/97-09/00	X 20 DTH	74	330363, 330364, 330365	330065, 330548	330085, 330137	330252	
	B Estate (21_, 22_, 23_)	09/97-09/00	X 20 DTH	74	330364, 330365	330065, 330548	330085, 330137	330252	
2.0 i	A (16_, 17_, 19_)	09/86-03/94	C 20 NE	85	330364	330034, 330435	330085, 330116, 330303	330252	
	A Estate (66_, 67_)	09/86-03/94	C 20 NE	85	330364	330034, 330435	330085, 330116, 330303	330252	
2.2 16V	B (25_, 26_, 27_)	09/99-07/03	Y 22 XE, Z 22 XE	106	330363, 330364	330065, 330548	330085, 330126, 330137, 330220, 330277, 330509	330252	
	B Estate (21_, 22_, 23_)	09/99-07/03	Y 22 XE, Z 22 XE	106	330364	330065, 330548	330085, 330126, 330137, 330220, 330277, 330509	330252	
2.2 DTI 16V	B (25_, 26_, 27_)	09/00-07/03	Y 22 DTH	81	330364	330065, 330548	330085, 330126, 330137	330252	
	B Estate (21_, 22_, 23_)	09/00-07/03	Y 22 DTH	81	330364	330065, 330548	330085, 330126, 330137	330252	
	B (25_, 26_, 27_)	09/00-07/03	Y 22 DTH	88	330364, 330365	330065, 330548	330085, 330126, 330137	330252	
	B Estate (21_, 22_, 23_)	09/00-07/03	Y 22 DTH	88	330364, 330365	330065, 330548	330085, 330126, 330137	330252	
2.3 D	A (16_, 17_, 19_)	10/86-03/94	23 YD	54	330360, 330364	330034, 330435	330085, 330116, 330303, 330310	330252	
	A Estate (66_, 67_)	09/86-03/94	23 YD	54	330360, 330364	330034, 330435	330085, 330116, 330303, 330310	330252	
2.3 TD Interc.	A (16_, 17_, 19_)	08/88-03/94	23 DTR	74	330360, 330364	330034, 330435	330085, 330116, 330303, 330310	330252	
	A Estate (66_, 67_)	09/88-03/94	23 DTR	74	330360, 330364	330034, 330435	330085, 330116, 330303, 330310	330252	
2.4 i	A (16_, 17_, 19_)	09/88-03/94	C 24 NE	92	330363, 330364	330034, 330435	330085, 330116, 330303	330252	
	A Estate (66_, 67_)	09/88-03/94	C 24 NE	92	330363, 330364	330034, 330435	330085, 330116, 330303	330252	
2.5 DTI	B (25_, 26_, 27_)	09/01-07/03	Y 25 DT	110	330356	330548		330252	
	B Estate (21_, 22_, 23_)	09/01-07/03	Y 25 DT	110	330356	330548		330252	
2.5 TD	B (25_, 26_, 27_)	04/94-07/03	25 DT, X 25 DT, X 25 TD	96	330356	330065, 330433	330121, 330300	330252	

OPS Oil Pressure Switches **BLS** Brake Light Switches **TT-RF** Temperature Transmitter and Radiator Fan Switches **RLS** Reverse Light Switches **VAR** Various

ERA S.p.A. Moncalieri (TO) Italy - tel: +39 011 6891511 - fax: +39 011 6472862 - www.eranet.it

Vehicle		Date	Engine	kW	OPS	BLS	TT-RF	RLS	VAR
2.5 TD	B Estate (21_, 22_, 23_)	04/94-02/01	25 DT, X 25 DT, X 25 TD	96	330356	330065, 330433	330121, 330300	330252	
2.5 V6	B (25_, 26_, 27_)	03/94-09/00	X 25 XE	125	330363, 330364	330065, 330068, 330431, 330548	330085, 330116, 330126, 330137, 330220, 330277, 330300	330252	
	B Estate (21_, 22_, 23_)	03/94-09/00	X 25 XE	125	330363, 330364	330065, 330068, 330431, 330548	330085, 330116, 330126, 330137, 330220, 330277, 330300	330252	
2.6 i	A (16_, 17_, 19_)	09/90-03/94	C 26 NE	110	330364	330034, 330435	330116, 330126, 330303	330252	
	A Estate (66_, 67_)	09/90-03/94	C 26 NE	110	330364	330034, 330435	330116, 330126, 330303	330252	
2.6 V6	B (25_, 26_, 27_)	09/00-07/03	Y 26 SE	132	330364	330065, 330548	330085, 330126, 330137, 330220	330252	
	B Estate (21_, 22_, 23_)	09/00-07/03	Y 26 SE	132	330364	330065, 330548	330085, 330126, 330137, 330220	330252	
3.0	A (16_, 17_, 19_)	03/87-12/87	C 30 LE	115	330364	330034, 330435	330116, 330126, 330303	330252	
	A Estate (66_, 67_)	03/87-03/94	C 30 LE	115	330363, 330364	330034, 330435	330116, 330126, 330303	330252	
	A (16_, 17_, 19_)	03/87-09/90	30 NE	130	330011, 330363, 330364	330034, 330435	330116, 330126, 330133, 330303	330252	
	A (16_, 17_, 19_)	03/88-03/94	C 30 NE	130	330363, 330364	330034, 330435	330126, 330133, 330303	330252	
	A Estate (66_, 67_)	03/87-09/90	30 NE	130	330011, 330363, 330364	330034, 330435	330116, 330126, 330133, 330303	330252	
3.0 CAT	A Estate (66_, 67_)	03/87-03/94	C 30 NE	130	330363, 330364	330034, 330435	330126, 330133, 330303	330252	
3.0 24V	A (16_, 17_, 19_)	09/89-03/94	C 30 SEJ	147	330363				
	A Estate (66_, 67_)	09/89-03/94	C 30 SEJ	147	330363				
	A (16_, 17_, 19_)	09/89-03/94	C 30 SE	150	330363, 330364	330034, 330435	330116, 330126, 330303	330252	
3.0 V6	B (25_, 26_, 27_)	04/94-02/01	X 30 XE	155	330363, 330364	330065, 330068, 330431, 330548	330085, 330116, 330126, 330137, 330220, 330277, 330300	330252	
	B Estate (21_, 22_, 23_)	04/94-02/01	X 30 XE	155	330363, 330364	330065, 330068, 330431, 330548	330085, 330116, 330126, 330137, 330220, 330277, 330300	330252	
3.2 V6	B (25_, 26_, 27_)	02/01-07/03	Y 32 SE	160	330364	330548	330085, 330126, 330137, 330220	330252	
	B Estate (21_, 22_, 23_)	02/01-07/03	Y 32 SE	160	330364	330548	330085, 330126, 330137, 330220	330252	
3.6 24V Lotus	A (16_, 17_, 19_)	08/90-09/92	C 36 GET	277	330364	330034, 330435	330117		

SENATOR 09/87 - 09/93

2.5 i	B (29_)	09/90-09/93	25 NE	103	330011, 330363, 330364	330034, 330435	330085, 330116, 330210, 330277, 330303	330252	
2.6 i	B (29_)	09/90-09/93	C 26 NE	110	330011, 330364	330034, 330435	330085, 330116, 330210, 330277, 330303	330252	

OPS Oil Pressure Switches **BLS** Brake Light Switches **TT-RF** Temperature Transmitter and Radiator Fan Switches **RLS** Reverse Light Switches **VAR** Various

Vehicle		Date	Engine	kW	OPS	BLS	TT-RF	RLS	VAR
3.0	B (29_)	09/87-09/93	C 30 LE	115	330011, 330363, 330364	330034, 330435	330085, 330116, 330210, 330277, 330303	330252	
	B (29_)	01/88-09/90	30 NE	130	330011, 330363, 330364	330034, 330435	330085, 330116, 330210, 330277, 330303	330252	
3.0 24V	B (29_)	09/89-09/93	C 30 SE	150	330011, 330363, 330364	330034, 330435	330085, 330116, 330210, 330277, 330303	330252	
3.0 i CAT	B (29_)	01/88-09/93	C 30 NE	130	330011, 330363, 330364	330034, 330435	330085, 330116, 330210, 330277, 330303	330252	
SIGNUM			**05/03 -**						
1.8		05/03-	Z 18 XE	90	330363, 330364	330720, 330721	330509		
		09/05-	Z 18 XER	103	330366	330720, 330721			
1.9 CDTI		08/05-	Z 19 DT	74		330720, 330721	330142		
		04/04-	Z 19 DT	88		330720, 330721	330142		
		04/04-	Z 19 DTH	110		330720, 330721	330142		
2.0 DTI		05/03-	Y 20 DTH	74	330364, 330365	330720, 330721	330137		
2.0 Turbo		05/03-	Z 20 NET	129		330720, 330721	330137		
2.2 direct		05/03-	Z 22 YH	114		330720, 330721	330107		
2.2 DTI		05/03-	Y 22 DTR	92	330364, 330365	330720, 330721	330137		
2.8 V6 Turbo		09/05-	Z 28 NEL	169		330720, 330721	330137		
		01/06-	Z 28 NET	184		330720, 330721	330137		
3.0 V6 CDTI		05/03-	Y 30 DT	130	330007	330720, 330721	330107		
		09/05-	Z 30 DT	135		330720, 330721	330117		
3.2 V6		05/03-	Z 32 SE	155	330363, 330364	330720, 330721	330137		
SINTRA			**11/96 - 04/99**						
2.2 DTI		07/97-04/99	X 22 DTH	85	330364, 330365		330116	330244	
2.2 i 16V		11/96-04/99	X 22 XE	104	330363, 330364		330137, 330220	330244	
3.0 i 24V		11/96-04/99	X 30 XE	148	330363, 330364		330137, 330220	330244	
SPEEDSTER			**09/00 -**						
2.0 Turbo		04/03-	Z 20 LET	147	330363, 330364	330529	330137		
2.2		09/00-	Z 22 SE	108		330066	330107		
TIGRA			**07/94 -**						
1.3 CDTI	TwinTop	06/04-	Z 13 DT	51		330547, 330548, 330720	330142	330244	
1.4	TwinTop	06/04-	Z 14 XEP	66		330547, 330548, 330720	330137	330244	
1.4 16V	(95_)	08/97-12/00	X 14 XE	63	330363, 330364	330034	330085, 330116, 330126, 330137, 330225, 330277	330244	
	(95_)	07/94-12/00	X 14 XE	66	330363, 330364	330034	330085, 330116, 330126, 330137, 330225, 330277	330244	

OPS Oil Pressure Switches **BLS** Brake Light Switches **TT-RF** Temperature Transmitter and Radiator Fan Switches **RLS** Reverse Light Switches **VAR** Various

ERA S.p.A. Moncalieri (TO) Italy - tel: +39 011 6891511 - fax: +39 011 6472862 - www.eranet.it

Vehicle		Date	Engine	kW	OPS	BLS	TT-RF	RLS	VAR
1.6 16V	(95_)	08/97-08/98	C 16 SEL	74	330363, 330364	330034	330085, 330126, 330137, 330225, 330277	330244	
	(95_)	07/94-08/98	X 16 XE	78	330363, 330364	330034	330085, 330116, 330126, 330137, 330225, 330277	330244	
1.8	TwinTop	06/04-	Z 18 XE	92	330363, 330364	330547, 330548, 330720	330509	330244	
VECTRA			**04/88 -**						
1.4 S	A (86_, 87_)	09/88-06/92	14 NV	55	330363, 330364	330057, 330429, 330436	330085, 330277, 330301	330244	
	A Hatchback (88_, 89_)	04/88-06/92	14 NV	55	330363, 330364	330057, 330429, 330436	330085, 330277, 330301	330244	
1.6	A Hatchback (88_, 89_)	08/92-07/93	C 16 LZ2	51	330364	330057, 330429, 330436	330085, 330116, 330126, 330220, 330223, 330277, 330301	330244	
	A (86_, 87_)	09/88-05/93	16 SV	60	330363, 330364	330057, 330429, 330436	330085, 330277, 330301	330244	
	C GTS	08/05-	Z 16 XE	74	330363, 330364	330720, 330721	330137		
	C	01/06-	Z 16 XEP	77	330366	330720, 330721	330137		
	C Estate	01/06-	Z 16 XEP	77	330366	330720, 330721	330137		
	C GTS	01/06-	Z 16 XEP	77	330366	330720, 330721	330137		
1.6 16V	C	06/04-	Z 16 XE	74	330363, 330364	330720, 330721	330137		
	C Estate	06/04-	Z 16 XE	74	330363, 330364	330720, 330721	330137		
1.6 i	A (86_, 87_)	09/93-11/95	X 16 SZ	52	330363	330057, 330429, 330436	330085, 330116, 330223, 330301	330244	
	A Hatchback (88_, 89_)	09/93-11/95	X 16 SZ	52	330363	330057, 330429, 330436	330085, 330116, 330223, 330301	330244	
	A (86_, 87_)	09/88-10/90	E 16 NZ	55	330016, 330363, 330364	330057, 330429, 330436	330085, 330116, 330277, 330301	330244	
	B (36_)	10/95-04/02	X 16 SZR	55	330363, 330364	330080, 330429, 330712	330116, 330137, 330226, 330227, 330277	330244	
	B (36_)	10/95-04/02	16 LZ2	55	330363, 330364	330080, 330429, 330712	330116, 330126, 330226, 330227, 330277	330244	
	B Estate (31_)	11/96-06/00	X 16 SZR	55	330363, 330364	330080, 330429, 330712	330116, 330137, 330226, 330227, 330277	330244	
	B Estate (31_)	11/96-06/00	16 LZ2	55	330363, 330364	330080, 330429, 330712	330116, 330126, 330226, 330227, 330277	330244	
	B Hatchback (38_)	10/95-07/03	X 16 SZR	55	330363, 330364	330080, 330429, 330712	330116, 330137, 330226, 330227, 330277	330244	
	B Hatchback (38_)	10/95-07/03	16 LZ2	55	330363, 330364	330080, 330429, 330712	330116, 330126, 330226, 330227, 330277	330244	
1.6 i 16V	B (36_)	10/95-04/02	X 16 XEL, Y 16 XE, Z 16 XE	74	330363, 330364	330080, 330429, 330712	330085, 330116, 330137, 330226, 330227, 330277	330244	

Vehicle		Date	Engine	kW	OPS	BLS	TT-RF	RLS	VAR
1.6 i 16V	B Estate (31_)	11/96-07/02	X 16 XEL, Y 16 XE, Z 16 XE	74	330363, 330364	330080, 330429, 330712	330085, 330116, 330137, 330226, 330227, 330277	330244	
	B Hatchback (38_)	10/95-07/02	X 16 XEL, Y 16 XE, Z 16 XE	74	330363, 330364	330080, 330429, 330712	330085, 330116, 330137, 330226, 330227, 330277	330244	
1.6 i CAT	A (86_, 87_)	09/88-11/95	C 16 NZ, C 16 NZ2	55	330016, 330363, 330364	330057, 330429, 330436	330085, 330116, 330126, 330220, 330223, 330277, 330301	330244	
	A Hatchback (88_, 89_)	09/88-11/95	C 16 NZ, C 16 NZ2	55	330016, 330363, 330364	330057, 330429, 330436	330085, 330116, 330126, 330220, 330223, 330277, 330301	330244	
1.6 S	A Hatchback (88_, 89_)	09/88-05/93	16 SV	60	330363, 330364	330057, 330429, 330436	330085, 330277, 330301	330244	
1.7 D	A (86_, 87_)	10/88-09/92	17 D	42	330363, 330364	330057, 330429, 330436	330085, 330223, 330302, 330304, 330305	330244	
	A Hatchback (88_, 89_)	09/88-09/92	17 D	42	330363, 330364	330057, 330429, 330436	330085, 330223, 330302, 330304, 330305	330244	
	A (86_, 87_)	07/92-11/95	17 DR	44	330363, 330364	330057, 330429, 330436	330085, 330223, 330302, 330304, 330305	330244	
	A Hatchback (88_, 89_)	07/92-11/95	17 DR	44	330363, 330364	330057, 330429, 330436	330085, 330223, 330302, 330304, 330305	330244	
1.7 TD	A (86_, 87_)	03/90-11/95	17 DT (TC4EE1), X 17 DT (TC4EE1)	60	330007	330057, 330429, 330436	330085, 330223, 330306	330244	
	A Hatchback (88_, 89_)	03/90-11/95	17 DT (TC4EE1), X 17 DT (TC4EE1)	60	330007	330057, 330429, 330436	330085, 330223, 330306	330244	
	B (36_)	10/95-12/98	X 17 DT (TC4EE1)	60	330007	330429, 330712	330085, 330126, 330198	330244	
	B Estate (31_)	11/96-12/97	X 17 DT (TC4EE1)	60		330712			
	B Hatchback (38_)	10/95-12/98	X 17 DT (TC4EE1)	60	330007	330429, 330712	330085, 330126, 330198	330244	
1.8	C	04/02-	Z 18 XEL	81	330363, 330364	330720, 330721	330509		
	C Estate	10/03-	Z 18 XE	90	330363, 330364	330720, 330721	330509		
	C	01/06-	Z 18 XER	103	330366	330720, 330721			
	C Estate	01/06-	Z 18 XER	103	330366	330720, 330721			
	C GTS	01/06-	Z 18 XER	103	330366	330720, 330721			
1.8 16V	C	04/02-	Z 18 XE	90	330363, 330364	330720, 330721	330509		
	C GTS	08/02-	Z 18 XE	90	330363, 330364	330720, 330721	330509		
1.8 i	A Hatchback (88_, 89_)	09/88-10/90	18 SV	66	330363, 330364	330057, 330429, 330436	330085, 330126, 330223, 330277, 330301	330244	
1.8 i 16V	B (36_)	10/95-09/00	X 18 XE1	85	330363, 330364	330065, 330080, 330429, 330712	330085, 330120, 330126, 330226, 330227, 330509, 330528, 330651	330244	
	B Estate (31_)	11/96-09/00	X 18 XE1	85	330363, 330364	330065, 330080, 330429, 330712	330085, 330120, 330126, 330226, 330227, 330509, 330528, 330651	330244	

OPS Oil Pressure Switches **BLS** Brake Light Switches **TT-RF** Temperature Transmitter and Radiator Fan Switches **RLS** Reverse Light Switches **VAR** Various

ERA S.p.A. Moncalieri (TO) Italy - tel: +39 011 6891511 - fax: +39 011 6472862 - www.eranet.it

Vehicle		Date	Engine	kW	OPS	BLS	TT-RF	RLS	VAR
1.8 i 16V	B Hatchback (38_)	10/95-09/00	X 18 XE1	85	330363, 330364	330065, 330080, 330429, 330712	330085, 330120, 330126, 330226, 330227, 330509, 330528, 330651	330244	
	B (36_)	09/00-04/02	Z 18 XE	92	330363, 330364	330065, 330712	330085, 330226, 330227, 330509	330244	
	B Estate (31_)	09/00-07/03	Z 18 XE	92	330363, 330364	330065, 330712	330085, 330226, 330227, 330509	330244	
	B Hatchback (38_)	09/00-07/03	Z 18 XE	92	330363, 330364	330065, 330712	330085, 330226, 330227, 330509	330244	
1.8 i CAT	A (86_, 87_)	03/90-11/95	C 18 NZ	66	330363, 330364	330057, 330429, 330436	330085, 330116, 330126, 330223, 330277, 330301	330244	
	A Hatchback (88_, 89_)	03/90-11/95	C 18 NZ	66	330363, 330364	330057, 330429, 330436	330085, 330116, 330126, 330223, 330277, 330301	330244	
1.8 S	A (86_, 87_)	09/88-07/89	E 18 NVR	65	330363, 330364	330057, 330429, 330436	330085, 330126, 330223, 330277, 330301	330244	
	A Hatchback (88_, 89_)	09/88-07/89	E 18 NVR	65	330363, 330364	330057, 330429, 330436	330085, 330126, 330223, 330277, 330301	330244	
	A (86_, 87_)	09/89-10/90	18 SV	66	330363, 330364	330057, 330429, 330436	330085, 330126, 330223, 330277, 330301	330244	
1.8 S 4x4	A (86_, 87_)	01/89-07/89	E 18 NVR	65	330363, 330364	330057, 330429, 330436	330085, 330126, 330223, 330277, 330301	330244	
1.9 CDTI	C	10/05-	Z 19 DT	74		330720, 330721	330142		
	C Estate	10/05-	Z 19 DTL	74		330720, 330721	330142		
	C GTS	10/05-	Z 19 DT	74		330720, 330721	330142		
	C	04/04-	Z 19 DT	88		330720, 330721	330142		
	C Estate	04/04-	Z 19 DT	88		330720, 330721	330142		
	C GTS	04/04-	Z 19 DT	88		330720, 330721	330142		
	C	04/04-	Z 19 DTH	110		330720, 330721	330142		
	C Estate	04/04-	Z 19 DTH	110		330720, 330721	330142		
	C GTS	04/04-	Z 19 DTH	110		330720, 330721	330142		
2.0 16V Turbo	C	03/03-	Z 20 NET	129		330720, 330721	330137		
	C GTS	03/03-	Z 20 NET	129		330720, 330721	330137		
2.0 DI 16V	B (36_)	11/96-04/02	X 20 DTL	60	330364, 330365	330065, 330434, 330712	330085, 330137, 330226, 330227, 330277	330244	
	B Estate (31_)	11/96-06/00	X 20 DTL	60	330364, 330365	330065, 330434, 330712	330085, 330137, 330226, 330227, 330277	330244	
	B Hatchback (38_)	11/96-06/00	X 20 DTL	60	330364, 330365	330065, 330434, 330712	330085, 330137, 330226, 330227, 330277	330244	
2.0 DTI	C Estate	10/03-	Y 20 DTH	74	330364, 330365	330720, 330721	330137		
2.0 DTI 16V	B (36_)	06/97-04/02	X 20 DTH, Y 20 DTH	74	330364, 330365	330065, 330434, 330712	330085, 330126, 330137, 330198	330244	
	B Estate (31_)	06/97-07/03	X 20 DTH, Y 20 DTH	74	330364, 330365	330065, 330434, 330712	330085, 330126, 330137, 330198	330244	

OPS Oil Pressure Switches **BLS** Brake Light Switches **TT-RF** Temperature Transmitter and Radiator Fan Switches **RLS** Reverse Light Switches **VAR** Various

Vehicle		Date	Engine	kW	OPS	BLS	TT-RF	RLS	VAR
2.0 DTI 16V	B Hatchback (38_)	06/97-07/03	X 20 DTH, Y 20 DTH	74	330364, 330365	330065, 330434, 330712	330085, 330126, 330137, 330198	330244	
	C	04/02-	Y 20 DTH	74	330364, 330365	330720, 330721	330137		
	C GTS	08/02-	Y 20 DTH	74	330364, 330365	330720, 330721	330137		
2.0 i	B (36_)	10/95-04/02	20 NEJ	82	330363, 330364	330065, 330080, 330429, 330712	330085, 330116, 330226, 330227	330244	
	B Estate (31_)	11/96-02/02	20 NEJ	82	330363, 330364	330065, 330080, 330429, 330712	330085, 330116, 330226, 330227	330244	
	B Hatchback (38_)	10/95-02/02	20 NEJ	82	330363, 330364	330065, 330080, 330429, 330712	330085, 330116, 330226, 330227	330244	
	A (86_, 87_)	09/88-10/90	20 NE	85	330363, 330364	330057, 330429, 330436	330085, 330116, 330126, 330178, 330218, 330220, 330223, 330277, 330301	330244	
	A Hatchback (88_, 89_)	09/88-10/90	20 NE	85	330363, 330364	330057, 330429, 330436	330085, 330116, 330126, 330178, 330218, 330220, 330223, 330277, 330301	330244	
	A (86_, 87_)	09/88-09/92	20 SEH	95	330363, 330364	330057	330085, 330116, 330126, 330220, 330223, 330277, 330301	330244	
2.0 i 16V	A (86_, 87_)	06/94-11/95	X 20 XEV	100	330363, 330364	330057, 330429, 330436	330085, 330126, 330178, 330217, 330220, 330223, 330277, 330651	330244	
	A Hatchback (88_, 89_)	06/94-11/95	X 20 XEV	100	330363, 330364	330057, 330429, 330436	330085, 330126, 330178, 330217, 330220, 330223, 330277, 330651	330244	
	B (36_)	10/95-09/00	C 20 SEL, X 20 XEV	100	330363, 330364	330065, 330080, 330429, 330712	330085, 330126, 330226, 330227, 330528, 330651	330244	
	B Estate (31_)	11/96-09/00	C 20 SEL, X 20 XEV	100	330363, 330364	330065, 330080, 330429, 330712	330085, 330126, 330226, 330227, 330528, 330651	330244	
	B Hatchback (38_)	10/95-09/00	C 20 SEL, X 20 XEV	100	330363, 330364	330065, 330080, 330429, 330712	330085, 330126, 330226, 330227, 330528, 330651	330244	
2.0 i 16V 4x4	A (86_, 87_)	06/94-11/95	X 20 XEV	100	330363, 330364	330057, 330429, 330436	330085, 330126, 330178, 330217, 330220, 330223, 330277, 330651	330244	
2.0 i 16V CAT	A Hatchback (88_, 89_)	02/90-11/95	C 20 XE	110	330363, 330364	330057	330085, 330116, 330126, 330178, 330220, 330223, 330277, 330301	330244	
2.0 i 4x4	A (86_, 87_)	01/89-10/90	20 NE	85	330363, 330364	330057, 330429, 330436	330085, 330116, 330126, 330178, 330218, 330220, 330223, 330277, 330301	330244	
	A (86_, 87_)	01/89-09/92	20 SEH	95	330363, 330364	330057	330085, 330116, 330126, 330220, 330223, 330277, 330301	330244	

OPS Oil Pressure Switches **BLS** Brake Light Switches **TT-RF** Temperature Transmitter and Radiator Fan Switches **RLS** Reverse Light Switches **VAR** Various

ERA S.p.A. Moncalieri (TO) Italy - tel: +39 011 6891511 - fax: +39 011 6472862 - www.eranet.it

Vehicle		Date	Engine	kW	OPS	BLS	TT-RF	RLS	VAR
2.0 i 4x4 CAT	A (86_, 87_)	01/89-11/95	C 20 NE	85	330363, 330364	330057, 330429, 330436	330085, 330116, 330126, 330178, 330218, 330220, 330223, 330277, 330301	330244	
2.0 i CAT	A (86_, 87_)	09/88-11/95	C 20 NE	85	330363, 330364	330057, 330429, 330436	330085, 330116, 330126, 330178, 330218, 330220, 330223, 330277, 330301	330244	
	A Hatchback (88_, 89_)	09/88-11/95	C 20 NE	85	330363, 330364	330057, 330429, 330436	330085, 330116, 330126, 330178, 330218, 330220, 330223, 330277, 330301	330244	
2.0 i GT	A Hatchback (88_, 89_)	09/88-11/95	20 SEH	95	330363, 330364	330057	330085, 330116, 330126, 330220, 330223, 330277, 330301	330244	
2.0 i Turbo 4x4	A (86_, 87_)	06/94-11/95	C 20 LET	150	330363, 330364	330057	330085, 330116, 330126, 330218, 330223, 330301	330244	
2.0 Turbo	C Estate	10/03-	Z 20 NET	129		330720, 330721	330137		
2.2 16V	C	04/02-	Z 22 SE	108		330720, 330721	330107		
	C GTS	08/02-	Z 22 SE	108		330720, 330721	330107		
2.2 direct	C	10/03-	Z 22 YH	114		330720, 330721	330107		
	C Estate	10/03-	Z 22 YH	114		330720, 330721	330107		
	C GTS	10/03-	Z 22 YH	114		330720, 330721	330107		
2.2 DTI	C Estate	10/03-	Y 22 DTR	92	330364, 330365	330720, 330721	330137		
2.2 DTI 16V	B (36_)	09/00-04/02	Y 22 DTR	92	330364, 330365	330065, 330712	330085, 330126, 330137	330244	
	B Estate (31_)	09/00-07/03	Y 22 DTR	92	330364, 330365	330065, 330712	330085, 330126, 330137	330244	
	B Hatchback (38_)	09/00-07/03	Y 22 DTR	92	330364, 330365	330065, 330712	330085, 330126, 330137	330244	
	C	04/02-	Y 22 DTR	92	330364, 330365	330720, 330721	330137		
	C GTS	08/02-	Y 22 DTR	92	330364, 330365	330720, 330721	330137		
2.2 i 16V	B (36_)	09/00-04/02	Z 22 SE	108		330065, 330712	330107, 330226	330244	
	B Estate (31_)	09/00-07/03	Z 22 SE	108		330065, 330712	330107, 330226	330244	
	B Hatchback (38_)	09/00-07/03	Z 22 SE	108		330065, 330712	330107, 330226	330244	
2.5 CD 4x4	A (86_, 87_)	08/92-08/95	C 25 XE	125	330364	330057, 330429, 330436	330085, 330116, 330126, 330223, 330302	330244	
2.5 i V6	B (36_)	10/95-09/00	X 25 XE	125	330363, 330364	330065, 330080, 330429, 330712	330085, 330116, 330126, 330137, 330226, 330227, 330277	330244	
	B Estate (31_)	11/96-09/00	X 25 XE	125	330363, 330364	330065, 330080, 330429, 330712	330085, 330116, 330126, 330137, 330226, 330227, 330277	330244	

Vehicle		Date	Engine	kW	OPS	BLS	TT-RF	RLS	VAR
2.5 i V6	B Hatchback (38_)	10/95-09/00	X 25 XE	125	330363, 330364	330065, 330080, 330429, 330712	330085, 330116, 330126, 330137, 330226, 330227, 330277	330244	
2.5 V6	A (86_, 87_)	02/93-11/95	C 25 XE	125	330363, 330364	330057, 330429, 330436	330085, 330116, 330126, 330223, 330302	330244	
	A Hatchback (88_, 89_)	02/93-11/95	C 25 XE	125	330363, 330364	330057, 330429, 330436	330085, 330116, 330126, 330223, 330302	330244	
2.6 i V6	B (36_)	09/00-04/02	Y 26 SE	125	330363, 330364	330065, 330712	330085, 330137, 330226, 330227, 330277	330244	
	B Estate (31_)	09/00-07/03	Y 26 SE	125	330363, 330364	330065, 330712	330085, 330137, 330226, 330227, 330277	330244	
	B Hatchback (38_)	09/00-07/03	Y 26 SE	125	330363, 330364	330065, 330712	330085, 330137, 330226, 330227, 330277	330244	
2.8 V6 Turbo	C	08/05-	Z 28 NEL	169		330720, 330721	330137		
	C Estate	08/05-	Z 28 NEL	169		330720, 330721	330137		
	C GTS	08/05-	Z 28 NEL	169		330720, 330721	330137		
	C	08/06-	Z 28 NET	184		330720, 330721	330137		
	C Estate	01/07-	Z 28 NET	184		330720, 330721	330137		
	C GTS	08/06-	Z 28 NET	184		330720, 330721	330137		
	C	08/05-	Z 28 NET	188		330720, 330721	330137		
	C Estate	08/05-	Z 28 NET	188		330720, 330721	330137		
	C GTS	08/05-	Z 28 NET	188		330720, 330721	330137		
	C Estate	01/07-	Z 28 NET	206		330720, 330721	330137		
	C GTS	08/06-	Z 28 NET	206		330720, 330721	330137		
2000 16V 4x4	A (86_, 87_)	01/89-10/90	20 XEJ	110	330364	330057	330085, 330116, 330178, 330220, 330223, 330277, 330301	330244	
2000/GT 16V	A (86_, 87_)	01/89-06/94	20 XEJ	110	330364	330057	330085, 330116, 330178, 330220, 330223, 330277, 330301	330244	
2000/GT 16V 4x4 CAT	A (86_, 87_)	02/90-11/95	C 20 XE	110	330363, 330364	330057	330085, 330116, 330126, 330178, 330220, 330223, 330277, 330301	330244	
2000/GT 16V CAT	A (86_, 87_)	02/90-11/95	C 20 XE	110	330363, 330364	330057	330085, 330116, 330126, 330178, 330220, 330223, 330277, 330301	330244	
3.0 CDTI	C	06/03-	Y 30 DT	130	330007	330720, 330721	330107		
	C GTS	06/03-	Y 30 DT	130	330007	330720, 330721	330107		
3.0 CDTi	C	08/05-	Z 30 DT	135		330720, 330721	330117		
	C GTS	08/05-	Z 30 DT	135		330720, 330721	330117		
3.0 V6 CDTI	C Estate	10/03-	Y 30 DT	130	330007	330720, 330721	330107		
	C Estate	08/05-	Z 30 DT	135		330720, 330721	330117		

OPS Oil Pressure Switches **BLS** Brake Light Switches **TT-RF** Temperature Transmitter and Radiator Fan Switches **RLS** Reverse Light Switches **VAR** Various

ERA S.p.A. Moncalieri (TO) Italy - tel: +39 011 6891511 - fax: +39 011 6472862 - www.eranet.it

Vehicle		Date	Engine	kW	OPS	BLS	TT-RF	RLS	VAR
3.2 V6	C	08/02-	Z 32 SE	155	330363, 330364	330720, 330721	330137		
	C Estate	10/03-	Z 32 SE	155	330363, 330364	330720, 330721	330137		
	C GTS	08/02-	Z 32 SE	155	330363, 330364	330720, 330721	330137		
i 500 2.5	B (36_)	05/98-09/00	X 25 XE	143	330363				
	B Estate (31_)	05/98-09/00	X 25 XE	143	330363				
VIVARO			**08/01 -**						
1.9 DI	Box (F7)	08/01-	F9Q 762	60	330340, 330630, 330698	330707, 330708, 330728	330692	330248	
	Combi (J7)	08/01-	F9Q 774	60	330340, 330630, 330698	330707, 330708, 330728	330692	330248	
1.9 DTI	Box (F7)	08/01-	F9Q 760	74	330340, 330630, 330698	330707, 330708, 330728	330692	330248	
	Combi (J7)	08/01-	F9Q 760	74	330340, 330630, 330698	330707, 330708, 330728	330692	330248	
	Flatbed / Chassis (E7)	08/06-	F9Q 760	74	330340, 330630, 330698	330707, 330708, 330728	330692	330248	
2.0 16V	Box (F7)	08/01-	F4R 720	88	330027, 330340, 330630, 330698	330707, 330708, 330728	330138	330248, 330543	
	Combi (J7)	08/01-	F4R 720	88	330027, 330340, 330630, 330698	330707, 330708, 330728	330138	330248, 330543	
	Flatbed / Chassis (E7)	08/06-	F4R 720	88	330027, 330340, 330630, 330698	330707, 330708, 330728	330138	330248, 330543	
2.0 CDTI	Box (F7)	08/06-	M9R 782	66	330340, 330698	330707, 330708, 330728	330558	330248	
	Combi (J7)	08/06-	M9R 782	66	330340, 330698	330707, 330708, 330728	330558	330248	
	Flatbed / Chassis (E7)	01/06-	M9R 782	66	330340, 330698	330707, 330708, 330728	330558	330248	
	Box (F7)	08/06-	M9R 780	84	330340, 330698	330707, 330708, 330728	330558	330248	
	Combi (J7)	08/06-	M9R 780	84	330340, 330698	330707, 330708, 330728	330558	330248	
	Flatbed / Chassis (E7)	08/06-	M9R 780	84	330340, 330698	330707, 330708, 330728	330558	330248	
2.0 ECOTEC	Box (F7)	08/06-	F4R 820	86	330027, 330340, 330630, 330698	330707, 330708, 330728	330138	330248, 330543	
	Combi (J7)	08/06-	F4R 820	86	330027, 330340, 330630, 330698	330707, 330708, 330728	330138	330248, 330543	
	Flatbed / Chassis (E7)	08/06-	F4R 820	86	330027, 330340, 330630, 330698	330707, 330708, 330728	330138	330248, 330543	
2.5 CDTI	Box (F7)	08/06-	G9U 630	84	330340, 330630, 330698	330707, 330708, 330728	330558, 330692	330248	
	Combi (J7)	08/06-	G9U 630	84	330340, 330630, 330698	330707, 330708, 330728	330558, 330692	330248	
	Flatbed / Chassis (E7)	08/06-	G9U 630	84	330340, 330630, 330698	330707, 330708, 330728	330558, 330692	330248	
	Box (F7)	08/06-	G9MB6	107	330340, 330630, 330698	330707, 330708, 330728	330558, 330692	330248	
	Combi (J7)	08/06-	G9U 630	107	330340, 330630, 330698	330707, 330708, 330728	330558, 330692	330248	
	Flatbed / Chassis (E7)	08/06-	G9U 630	107	330340, 330630, 330698	330707, 330708, 330728	330558, 330692	330248	

OPS Oil Pressure Switches **BLS** Brake Light Switches **TT-RF** Temperature Transmitter and Radiator Fan Switches **RLS** Reverse Light Switches **VAR** Various

Vehicle		Date	Engine	kW	OPS	BLS	TT-RF	RLS	VAR
2.5 DTI	Box (F7)	05/03-	G9U 730	99	330340, 330630, 330698	330707, 330708, 330728	330558, 330692	330248	
	Combi (J7)	05/03-	G9U 730	99	330340, 330630, 330698	330707, 330708, 330728	330558, 330692	330248	
ZAFIRA			**04/99 -**						
1.6	(A05)	01/06-	Z 16 YNG	69	330363, 330364	330720, 330721	330137		
	(F75_)	09/02-06/05	Z 16 YNG	70	330364	330431, 330720, 330721	330137	330244	
	(A05)	07/05-	Z 16 XEP	77	330366	330720, 330721	330137		
	(A05)	01/08-	Z 16 XER	85	330366	330720, 330721			
1.6 16V	(F75_)	04/99-06/05	X 16 XEL, Z 16 XE	74	330364	330080, 330429, 330431, 330529, 330720	330137	330244	
1.6 CNG	(F75_)	09/01-06/05	Z 16 YNG	71	330364	330431, 330720, 330721	330137	330244	
1.6 CNG Turbo	(A05)	02/09-	A 16 XNT	110		330720, 330721			
1.7 CDTI	(A05)	01/08-	A 17 DTJ	81		330720, 330721	330137		
	(A05)	01/08-	A 17 DTR	92		330720, 330721	330137		
1.8	(F75_)	02/03-06/05	Z 18 XEL	81		330720			
	(A05)	07/05-	Z 18 XEP, Z 18 XER	103	330366	330720, 330721			
1.8 16V	(F75_)	04/99-09/00	X 18 XE1	85	330364	330080, 330429, 330431, 330529, 330720	330509	330244	
	(F75_)	09/00-06/05	Z 18 XE	92	330364	330431, 330529, 330720	330509	330244	
1.9 CDTI	(A05)	07/05-	Z 19 DTL	74		330720, 330721	330142		
	(A05)	07/05-	Z 19 DT	88		330720, 330721	330142		
	(A05)	07/05-	Z 19 DTH	110		330720, 330721	330142		
2.0	(A05)	07/05-	Z 20 LER	147	330364	330720, 330721	330137		
	(A05)	01/06-	Z 20 LEH	177	330364	330720, 330721	330137		
2.0 DI 16V	(F75_)	10/99-06/05	X 20 DTL	60	330364, 330365	330431, 330529, 330720	330137	330244	
2.0 DTI 16V	(F75_)	09/00-06/05	Y 20 DTH	74	330364, 330365	330431, 330720	330137	330244	
2.0 OPC	(F75_)	09/01-06/05	Z 20 LET	141	330364	330431, 330529, 330720	330137	330244	
	(F75_)	11/02-06/05	Z 20 LER	147		330720			
2.2	(A05)	07/05-	Z 22 YH	110		330720, 330721	330107		
2.2 16V	(F75_)	09/00-06/05	Z 22 SE	108		330431, 330529, 330720	330107	330244	
2.2 DTI 16V	(F75_)	01/02-06/05	Y 22 DTR	92		330431, 330529, 330720	330137	330244	
PEUGEOT									
1007			**04/05 -**						
1.4	(KM_)	04/05-	KFV (TU3JP)	54	330026	330629, 330718, 330722	330551, 330637	330513	
1.4 16V	(KM_)	10/05-	KFU (ET3J4)	65	330026	330629, 330718, 330722	330552	330513	

OPS Oil Pressure Switches **BLS** Brake Light Switches **TT-RF** Temperature Transmitter and Radiator Fan Switches **RLS** Reverse Light Switches **VAR** Various

ERA S.p.A. Moncalieri (TO) Italy - tel: +39 011 6891511 - fax: +39 011 6472862 - www.eranet.it

Vehicle		Date	Engine	kW	OPS	BLS	TT-RF	RLS	VAR
1.4 HDi	(KM_)	04/05-	8HX (DV4TD), 8HZ (DV4TD)	50	330026	330629, 330718, 330722	330502	330513	
1.6 16V	(KM_)	04/05-	NFU (TU5JP4)	80	330026	330629, 330718, 330722	330552, 330624, 330637	330513	
1.6 HDi	(KM_)	06/07-	9HZ (DV6TED4)	80	330026	330629, 330722	330502	330681	
104			**10/72 - 06/88**						
0.9		10/79-10/83	108 (XV5)	33		330438	330167	330236	
1.0		09/83-06/88	108C (XV8)	32		330438	330167	330236	
106			**08/91 -**						
1.0	I (1A, 1C)	09/91-04/96	TU9	33	330010	330036, 330060	330116, 330147, 330160, 330188, 330588	330249	
	I (1A, 1C)	09/91-04/96	CDZ (TU9M)	37	330010	330036, 330060	330116, 330147, 330160, 330188, 330588	330249	
1.0 i	II (1)	05/96-	CDY (TU9M)	33	330010	330036, 330704	330188, 330588, 330637	330249, 330513	
	II (1)	01/97-	CDZ (TU9M)	37	330010	330036, 330704	330188, 330588, 330637	330249, 330513	
1.1	I (1A, 1C)	09/91-04/96	HDZ (TU1M)	44	330010	330036, 330060	330110, 330116, 330147, 330160, 330188, 330588	330249	
1.1 i	II (1)	01/97-	HDY (TU1M)	40	330010	330036, 330704	330122, 330188, 330588, 330637	330249, 330513	
	II (1)	05/96-	HDZ (TU1M), HFX (TU1JP)	44	330010, 330026	330036, 330704	330122, 330188, 330551, 330588, 330637	330249, 330513	
1.3	I (1A, 1C)	10/93-04/96	TU2J2	72	330010	330036, 330060	330109, 330122, 330147, 330188	330249	
1.4	I (1A, 1C)	08/91-03/96	TU 3	51	330010	330036, 330060	330147, 330160, 330188, 330588	330249	
	I (1A, 1C)	09/91-04/96	KDX (TU3MC), KDY (TU3M)	55	330010	330036, 330060	330110, 330116, 330147, 330160, 330188, 330588	330249	
	I (1A, 1C)	09/91-04/96	KFZ (TU3J2/Z)	69	330010	330036, 330060	330109, 330110, 330147, 330188, 330271, 330588	330249	
1.4 D	I (1A, 1C)	09/92-04/96	K9Y (TUD3Y)	37	330023	330036, 330060	330147, 330188	330249	
1.4 i	II (1)	05/96-	KFW (TU3JP), KFX (TU3JP)	55	330010, 330026	330036, 330060, 330704	330122, 330188, 330551, 330588, 330637	330249, 330513	
1.5 D	I (1A, 1C)	06/94-04/96	VJY (TUD5)	40	330023	330036, 330060	330134, 330188, 330271, 330637	330249	
	II (1)	05/96-	VJY (TUD5)	40	330023	330036, 330704	330134, 330147, 330188, 330271, 330588, 330637	330249, 330513	
	II (1)	10/00-	VJX (TUD5)	42	330023, 330026	330036, 330704	330134, 330188, 330588, 330637	330249, 330513	
	I (1A, 1C)	06/94-04/96	--	43	330023	330036, 330060	330134, 330188, 330271, 330637	330249	
1.6	I (1A, 1C)	06/93-04/96	NFZ (TU5JP)	65	330010	330036, 330060	330109, 330116, 330147, 330188, 330271, 330588	330249	

OPS Oil Pressure Switches **BLS** Brake Light Switches **TT-RF** Temperature Transmitter and Radiator Fan Switches **RLS** Reverse Light Switches **VAR** Various

Vehicle		Date	Engine	kW	OPS	BLS	TT-RF	RLS	VAR
1.6	I (1A, 1C)	01/94-04/96	NFY (TU5J2)	76	330010	330036, 330060	330109, 330116, 330147, 330188, 330588	330249	
1.6 i	II (1)	05/96-	NFZ (TU5JP)	65	330010	330036, 330060, 330704	330122, 330188, 330271, 330588, 330637	330249, 330513	
	II (1)	05/96-	NFW (TU5J2), NFY (TU5J2)	74	330010	330036, 330704	330122, 330271, 330588	330249, 330513	
1.6 S16	II (1)	05/96-	NFX (TU5J4)	87	330010	330036, 330704	330271, 330551, 330576	330249, 330513	
107			**06/05 -**						
1.0		06/05-	1KR (384 F)	50	330022	330723		330752	
1.4 HDi		06/05-	8HT (DV4TD)	40	330026	330723	330502		
205			**02/83 - 09/98**						
1.0	I (741A/C)	02/83-10/87	108C (XV8)	33	330010	330036, 330438	330167, 330180, 330188, 330203, 330207, 330267, 330269	330236, 330251	
	II (20A/C)	10/87-09/98	TU9	33	330010	330036, 330438	330086, 330158, 330167, 330180, 330188, 330203, 330207, 330215, 330267, 330269, 330271, 330272	330236, 330249, 330251	
	II (20A/C)	08/92-05/97	CDZ (TU9M)	37	330010	330438	330086, 330158, 330167, 330180, 330188, 330203, 330215, 330271, 330272	330249, 330251	
1.1	II (20A/C)	10/87-10/90	109N (XW7)	36	330010	330036, 330438	330158, 330167, 330180, 330188, 330203, 330207, 330215, 330267, 330269, 330271, 330272	330236, 330249, 330251	
	II (20A/C)	10/87-10/90	H1B (TU1)	40	330010	330036, 330438	330086, 330158, 330167, 330180, 330188, 330203, 330207, 330215, 330267, 330269, 330271, 330272	330236, 330249, 330251	
	II (20A/C)	07/89-09/98	HDZ (TU1M)	44	330010	330438	330086, 330110, 330158, 330167, 330180, 330188, 330203, 330215, 330269, 330271, 330272	330249	
1.1 CJ	I Convertible (741B, 20D)	10/89-12/94	HDZ (TU1M)	44	330010	330036, 330438	330086, 330116, 330158, 330167, 330180, 330188, 330203, 330207, 330215, 330267, 330269, 330271, 330272	330236, 330249, 330251	

OPS Oil Pressure Switches **BLS** Brake Light Switches **TT-RF** Temperature Transmitter and Radiator Fan Switches **RLS** Reverse Light Switches **VAR** Various

ERA S.p.A. Moncalieri (TO) Italy - tel: +39 011 6891511 - fax: +39 011 6472862 - www.eranet.it

Vehicle		Date	Engine	kW	OPS	BLS	TT-RF	RLS	VAR
1.2	II (20A/C)	01/87-12/90	F1	47	330344	330036, 330438	330158, 330167, 330188, 330207, 330215, 330267, 330269, 330271, 330272	330236, 330249, 330251	
1.3	I (741A/C)	02/84-10/87	G1A	47	330344	330036, 330438	330158, 330167, 330188, 330207, 330215, 330267, 330269, 330271, 330272	330236, 330249, 330251	
	II (20A/C)	08/90-07/92	G1A	47	330344	330438	330158, 330188, 330215, 330271, 330272	330249, 330251	
1.3 Rallye	II (20A/C)	10/87-10/90	TU24	74	330010	330036, 330438	330086, 330158, 330167, 330180, 330188, 330203, 330207, 330215, 330267, 330269, 330271, 330272	330236, 330249, 330251	
1.4	II (20A/C)	10/87-05/89	150D (XY7), 150G (XY7)	44	330010	330036, 330438	330158, 330167, 330203, 330207, 330267, 330269	330236, 330249, 330251	
	II (20A/C)	10/87-10/90	K1D (TU3A)	49	330010	330438	330086, 330158, 330272	330236, 330249, 330251	
	II (20A/C)	01/87-07/88	150 (XY6B)	53	330010	330036, 330438	330158, 330167, 330203, 330207, 330267, 330269	330236, 330249, 330251	
	II (20A/C)	07/88-09/98	KDY (TU3M), KDZ (TU3M), KFX (TU3JP)	55	330010	330036, 330438	330086, 330116, 330158, 330167, 330180, 330188, 330203, 330207, 330215, 330267, 330269, 330271, 330272	330236, 330249, 330251	
	II (20A/C)	07/88-05/89	150B (XY8), 150H (XY8)	58	330010	330036, 330438	330086, 330158, 330167, 330203, 330207, 330267, 330269	330236, 330249, 330251	
	II (20A/C)	06/87-12/89	K2B (TU3S)	62	330010	330036, 330438	330086, 330158, 330167, 330203, 330207, 330267, 330269	330236, 330249, 330251	
1.4 CAT	II (20A/C)	08/87-09/93	KAY (TU3CP)	44	330010	330036, 330438	330158, 330167, 330180, 330188, 330203, 330207, 330215, 330267, 330269, 330271, 330272	330236, 330249, 330251	
1.4 CJ	I Convertible (741B, 20D)	03/89-12/94	K1D (TU3A)	49	330010	330438	330086, 330158, 330272	330236, 330249, 330251	
	I Convertible (741B, 20D)	05/91-12/94	KDY (TU3M), KDZ (TU3M)	55	330010	330036, 330438	330086, 330116, 330158, 330167, 330180, 330188, 330203, 330207, 330215, 330267, 330269, 330271, 330272	330236, 330249, 330251	

Vehicle		Date	Engine	kW	OPS	BLS	TT-RF	RLS	VAR
1.4 CJ CAT	I Convertible (741B, 20D)	01/89-09/93	KAY (TU3CP)	44	330010	330036, 330438	330158, 330167, 330180, 330188, 330203, 330207, 330215, 330267, 330269, 330271, 330272	330236, 330249, 330251	
1.6	I (741A/C)	03/87-10/87	B1E (XU51C)	53	330010	330036, 330438	330086, 330158, 330167, 330180, 330188, 330203, 330207, 330215, 330267, 330269, 330271, 330272, 330527	330236, 330249, 330251	
	II (20A/C)	10/87-09/98	B1E (XU51C)	53	330010	330036, 330438	330086, 330158, 330167, 330180, 330188, 330203, 330207, 330215, 330267, 330269, 330271, 330272, 330527	330236, 330249, 330251	
	I (741A/C)	08/86-10/87	B1A (XU51C)	55	330010	330036, 330438	330086, 330158, 330167, 330180, 330188, 330203, 330207, 330215, 330267, 330269, 330271, 330272, 330527	330236, 330249, 330251	
	I (741A/C)	08/86-10/87	BAZ (XU5CP)	55	330010	330036, 330438	330086, 330158, 330167, 330203, 330207, 330267, 330269, 330527	330236, 330251	
	II (20A/C)	10/87-09/98	B1A (XU51C), BAZ (XU5CP)	55	330010	330036, 330438	330086, 330158, 330167, 330180, 330188, 330203, 330207, 330215, 330267, 330269, 330271, 330272, 330527	330236, 330249, 330251	
1.6 CTI	I Convertible (741B, 20D)	04/86-10/90	180A (XU5J), 180Z (XU5J)	76	330010	330036, 330438	330086, 330158, 330167, 330188, 330203, 330207, 330267, 330269, 330527	330236, 330251	
1.6 GTI	I (741A/C)	12/84-10/87	180A (XU5J)	76	330010	330036, 330438	330086, 330158, 330167, 330188, 330203, 330207, 330267, 330269, 330527	330236, 330251	
	II (20A/C)	10/87-12/89	180A (XU5J), 180Z (XU5J)	76	330010	330036, 330438	330086, 330158, 330167, 330188, 330203, 330207, 330267, 330269, 330527	330236, 330251	
1.7 Diesel	I (741A/C)	08/83-10/87	161A (XUD7)	44	330010	330036, 330438	330086, 330158, 330207, 330267, 330527	330236, 330251	
	II (20A/C)	07/87-09/98	161A (XUD7)	44	330010	330438	330086, 330158, 330271, 330272, 330527	330236, 330249, 330251	
1.7 TD	II (20A/C)	01/90-09/98	A8B (XUD7TE)	57	330010	330438	330086, 330271, 330272	330249, 330251	

OPS Oil Pressure Switches **BLS** Brake Light Switches **TT-RF** Temperature Transmitter and Radiator Fan Switches **RLS** Reverse Light Switches **VAR** Various

ERA S.p.A. Moncalieri (TO) Italy - tel: +39 011 6891511 - fax: +39 011 6472862 - www.eranet.it

Vehicle		Date	Engine	kW	OPS	BLS	TT-RF	RLS	VAR
1.9 CTI	I Convertible (741B, 20D)	10/87-12/94	DFZ (XU9J1)	75	330010	330438	330086, 330158, 330167, 330180, 330188, 330203, 330215, 330271, 330272, 330527	330249, 330251	
1.9 Diesel	II (20A/C)	10/87-09/98	DJZ (XUD9Y)	47	330010	330036, 330438	330086, 330158, 330207, 330267, 330271, 330272, 330527	330236, 330249, 330251	
1.9 GTI	I (741A/C)	03/87-10/87	DFZ (XU9J1)	75	330010	330036, 330438	330086, 330158, 330167, 330203, 330207, 330267, 330269, 330527	330236, 330251	
	II (20A/C)	10/87-10/94	DKZ (XU9JAZ)	88	330010	330036, 330438	330086, 330158, 330167, 330180, 330188, 330203, 330207, 330215, 330267, 330269, 330271, 330272, 330527	330236, 330249, 330251	
	I (741A/C)	10/86-10/87	D6B (XU9JA (ohne KAT))	94	330010	330036, 330438	330086, 330158, 330167, 330203, 330207, 330267, 330269, 330527	330236, 330251	
	II (20A/C)	10/87-09/98	D6B (XU9JA (G-KAT))	94	330010	330438	330086, 330158, 330167, 330180, 330188, 330203, 330207, 330215, 330267, 330269, 330271, 330272, 330527	330236, 330249, 330251	
1.9 GTI CAT	II (20A/C)	10/87-07/94	DFZ (XU9J1)	75	330010	330438	330086, 330158, 330167, 330180, 330188, 330203, 330215, 330271, 330272, 330527	330236, 330249, 330251	
206			**08/98 -**						
1.1	SW (2E/K)	07/02-	HFX (TU1JP)	44	330026	330074, 330704, 330713, 330715, 330716, 330718	330188, 330551, 330637	330249, 330513	
1.1 i	Hatchback (2A/C)	09/98-	HFX (TU1JP), HFZ (TU1JP)	44	330010, 330026	330074, 330704, 330713, 330715, 330716, 330718	330154, 330188, 330551, 330637	330249, 330513	
1.4	Saloon	03/07-	KFW (TU3JP)	55	330026	330715, 330716, 330718		330513	
	SW (2E/K)	07/02-	KFW (TU3JP)	55	330026	330074, 330704, 330713, 330715, 330716, 330718	330188, 330551, 330637	330249, 330513	
1.4 16V	Hatchback (2A/C)	10/03-	KFU (ET3J4)	65	330026	330715, 330718	330188, 330552, 330624, 330645	330513	
	SW (2E/K)	10/03-	KFU (ET3J4)	65	330026	330715, 330718	330188, 330552, 330624	330513	
1.4 HDi	SW (2E/K)	07/02-	8HX (DV4TD)	50	330026	330074, 330704, 330713, 330715, 330716, 330718	330502	330513	
	Hatchback (2A/C)	09/02-02/07	--	51		330704, 330713, 330715, 330716, 330718			

OPS Oil Pressure Switches **BLS** Brake Light Switches **TT-RF** Temperature Transmitter and Radiator Fan Switches **RLS** Reverse Light Switches **VAR** Various

Vehicle		Date	Engine	kW	OPS	BLS	TT-RF	RLS	VAR
1.4 HDi eco 70	Hatchback (2A/C)	09/01-	8HX (DV4TD), 8HZ (DV4TD)	50	330026	330074, 330704, 330713, 330715, 330716, 330718	330502	330513	
	Saloon	09/08-	8HZ (DV4TD)	50		330704, 330713, 330715, 330716, 330718			
1.4 i	Hatchback (2A/C)	09/98-	KFW (TU3JP), KFX (TU3JP)	55	330010, 330026	330074, 330704, 330713, 330715, 330716, 330718	330154, 330188, 330551, 330637	330249, 330513	
1.6 16V	CC (2D)	09/00-	NFU (TU5JP4)	80	330026	330074, 330704, 330713, 330715, 330716, 330718	330188, 330551, 330552, 330637	330513, 330681	
	Hatchback (2A/C)	12/00-	NFU (TU5JP4)	80	330026	330074, 330704, 330713, 330715, 330716, 330718	330188, 330551, 330552, 330637	330513, 330681	
	Saloon	03/07-	NFU (TU5JP4)	80	330026	330704, 330713, 330715, 330716, 330718	330552, 330637	330513, 330681	
	SW (2E/K)	07/02-	NFU (TU5JP4)	80	330026	330074, 330704, 330713, 330715, 330716, 330718	330188, 330551, 330552, 330637	330513, 330681	
1.6 HDi 110	CC (2D)	04/05-	9HZ (DV6TED4)	80	330026	330715, 330716, 330718	330502	330251, 330681	
	Hatchback (2A/C)	05/04-	9HY (DV6TED4), 9HZ (DV6TED4)	80	330026	330715, 330716, 330718	330502, 330645	330251, 330681	
	SW (2E/K)	05/04-	9HZ (DV6TED4)	80	330026	330715, 330716, 330718	330502	330251, 330681	
1.6 i	Hatchback (2A/C)	09/98-12/00	NFZ (TU5JP)	65	330010	330074, 330704, 330713	330154, 330188	330249, 330513	
1.9 D	Hatchback (2A/C)	09/98-11/01	WJZ (DW8)	51	330026	330074, 330704, 330713, 330715	330155, 330188, 330624	330251, 330681	
2.0 16V	SW (2E/K)	07/02-	RFN (EW10J4)	100	330026	330074, 330704, 330713, 330715, 330716, 330718	330624	330681	
2.0 HDi	SW (2E/K)	07/02-	RHY (DW10TD)	66	330026	330074, 330704, 330713, 330715, 330716, 330718	330502, 330551, 330624, 330742	330251, 330681	
2.0 HDI 90	Hatchback (2A/C)	12/99-	RHY (DW10TD)	66	330026	330074, 330704, 330713, 330715, 330716, 330718	330502, 330551, 330624, 330742	330251, 330681	
2.0 RC	Hatchback (2A/C)	07/03-	RFK (EW10J4S)	130	330026	330715, 330718	330645	330681	
2.0 S16	Hatchback (2A/C)	04/99-10/00	RFR (DEW10J4)	99	330026	330074, 330704, 330713	330624	330251, 330681	
	CC (2D)	09/00-	RFN (EW10J4)	100	330026	330074, 330704, 330713, 330715, 330716, 330718	330624	330681	
	Hatchback (2A/C)	10/00-	RFN (EW10J4)	100	330026	330074, 330704, 330713, 330715, 330716, 330718	330624	330681	
206+			**01/09 -**						
1.1	(T3E)	01/09-	HFX (TU1JP)	44		330715, 330716, 330718			
1.4 HDi eco 70	(T3E)	01/09-	8HX (DV4TD), 8HZ (DV4TD)	50		330715, 330716, 330718			
1.4 i	(T3E)	01/09-	KFV (TU3A)	55		330715, 330716, 330718			

OPS Oil Pressure Switches **BLS** Brake Light Switches **TT-RF** Temperature Transmitter and Radiator Fan Switches **RLS** Reverse Light Switches **VAR** Various

ERA S.p.A. Moncalieri (TO) Italy - tel: +39 011 6891511 - fax: +39 011 6472862 - www.eranet.it

Vehicle		Date	Engine	kW	OPS	BLS	TT-RF	RLS	VAR
207			**02/06 -**						
1.4	(WA_, WC_)	02/06-	KFV (TU3A)	53	330026	330629, 330722	330551	330513	
1.4 16V	(WA_, WC_)	02/06-	KFU (ET3J4)	65	330026	330629, 330722	330552	330513	
	(WA_, WC_)	06/07-	EP3	70	330026	330629, 330722	330552	330513	
1.4 HDi	(WA_, WC_)	02/06-	8HR (DV4TD)	50	330026	330629, 330722	330502	330513	
	Van	04/07-	8HZ (DV4TD)	50		330722			
1.6 16V	(WA_, WC_)	02/06-	NFU (TU5JP4)	80	330026	330629, 330722	330552, 330637	330513	
1.6 16V RC	(WA_, WC_)	02/07-	5FY (EP6DTS)	128	330026	330629, 330722	330552	330681	
1.6 16V Turbo	(WA_, WC_)	02/06-	EP6DT	110	330026	330629, 330722	330552	330681	
1.6 16V VTi	(WA_, WC_)	02/07-	EP6	88	330026	330629, 330722	330552	330513	
1.6 HDi	(WA_, WC_)	02/06-	9HX (DV6ATED4)	66	330026	330629, 330722	330502	330681	
	Van	04/07-	9HX (DV6ATED4)	66		330722		330681	
	(WA_, WC_)	11/09-	--	68		330722		330681	
	(WA_, WC_)	02/06-	9HY (DV6TED4)	80	330026	330629, 330722	330502	330681	
1.6 HDi 110	(WA_, WC_)	08/09-	--	82		330722		330681	
207 CC			**02/07 -**						
1.6 16V	(WD_)	02/07-	EP6	88	330026	330629, 330722	330552	330513	
1.6 16V Turbo	(WD_)	02/07-	EP6DT	110	330026	330629, 330722	330552	330681	
1.6 HDi	(WD_)	02/07-	9HZ (DV6TED4)	80	330026	330629, 330722	330502	330681	
	(WD_)	08/09-	--	82		330722		330681	
207 SW			**06/07 -**						
1.4	(WK_)	06/07-	KFV (TU3A)	54	330026	330629, 330722	330551	330513	
1.4 16V	(WK_)	06/07-	EP3	70	330026	330629, 330722	330552	330513	
1.6 16V	(WK_)	06/07-	EP6	88	330026	330629, 330722	330552	330513	
1.6 16V RC	(WK_)	02/07-	5FY (EP6DTS)	128		330629, 330722		330681	
1.6 HDi	(WK_)	06/07-	9HX (DV6ATED4)	66		330629, 330722		330681	
	(WK_)	11/09-	--	68		330722		330681	
	(WK_)	06/07-	9HZ (DV6TED4)	80	330026	330629, 330722	330502	330681	
	(WK_)	08/09-	--	82		330722		330681	
3008			**06/09 -**						
1.6 HDi		06/09-	9HZ (DV6TED4)	80		330722		330681	
		08/10-	--	82		330722		330681	
1.6 THP		06/09-	5FX (EP6DT)	110		330722		330681	
		06/09-	5FV (EP6DT)	115		330722		330681	
1.6 VTi		06/09-	EP6	88		330722		330681	
2.0 HDi		06/09-	RHE (DW10CTED4)	110		330722			
		06/09-	RHH (DW10CTED4)	120		330722			

OPS Oil Pressure Switches **BLS** Brake Light Switches **TT-RF** Temperature Transmitter and Radiator Fan Switches **RLS** Reverse Light Switches **VAR** Various

Vehicle		Date	Engine	kW	OPS	BLS	TT-RF	RLS	VAR
305		**11/77 - 07/90**							
1.5	I (581A)	05/80-09/82	117 (XR5S)	65		330036, 330438	330084, 330086, 330167, 330169	330236	
1.5 Diesel	I (581A)	11/77-09/82	149 (XID)	36		330036, 330438	330084, 330203, 330207, 330267		
1.9 D	II (581M)	10/82-07/88	162 (XUD9), D9A (XUD9)	47	330010	330036, 330438	330086, 330203, 330207, 330267	330236	
1.9 Diesel	II Break (581E)	10/82-12/88	162 (XUD9), D9A (XUD9)	47	330010	330036, 330438	330086, 330203, 330207, 330267	330236	
306		**04/93 - 04/02**							
1.1	(7B, N3, N5)	06/94-05/01	HDZ (TU1M)	44	330010	330060	330109, 330110, 330116, 330147, 330188, 330588	330249	
	Hatchback (7A, 7C, N3, N5)	05/93-05/01	HDZ (TU1M)	44	330010	330060	330109, 330110, 330116, 330147, 330188, 330588	330249	
1.4	Break (7E, N3, N5)	03/97-04/02	KFW (TU3JP), KFX (TU3JP)	55	330010, 330026	330060	330122, 330154, 330188, 330551, 330637	330249, 330513	
	Hatchback (7A, 7C, N3, N5)	05/93-05/01	KDX (TU3MC), KFW (TU3JP), KFX (TU3JP)	55	330010, 330026	330060	330109, 330110, 330116, 330122, 330147, 330154, 330188, 330551, 330588, 330637	330249, 330513	
1.4 SL	(7B, N3, N5)	06/94-05/01	KDX (TU3MC), KFW (TU3JP), KFX (TU3JP)	55	330010, 330026	330060	330109, 330110, 330116, 330122, 330147, 330154, 330188, 330551, 330588, 330637	330249, 330513	
1.6	Break (7E, N3, N5)	03/97-10/00	NFZ (TU5JP)	65	330010	330060	330109, 330116, 330122, 330147, 330154, 330188, 330588	330249, 330513	
	Convertible (7D, N3, N5)	04/96-10/00	NFZ (TU5JP)	65	330010	330060	330109, 330116, 330122, 330147, 330154, 330188, 330588	330249, 330513	
	Hatchback (7A, 7C, N3, N5)	05/93-10/00	NFZ (TU5JP)	65	330010	330060	330109, 330116, 330122, 330147, 330154, 330188, 330588	330249, 330513	
	(7B, N3, N5)	10/00-05/01	NFT	72	330026	330060	330154, 330188, 330551	330249, 330513	
	Break (7E, N3, N5)	10/00-04/02	NFT	72	330026	330060	330154, 330188, 330551	330249, 330513	
	Convertible (7D, N3, N5)	10/00-04/02	NFT	72	330026	330060	330154, 330188, 330551	330249, 330513	
	Hatchback (7A, 7C, N3, N5)	10/00-05/01	NFT	72	330026	330060	330154, 330188, 330551	330249, 330513	
1.6 SR	(7B, N3, N5)	06/94-10/00	NFZ (TU5JP)	65	330010	330060	330109, 330116, 330122, 330147, 330154, 330188, 330588	330249, 330513	
1.8	(7B, N3, N5)	10/95-04/97	LFZ (XU7JP)	74				330681	

OPS Oil Pressure Switches **BLS** Brake Light Switches **TT-RF** Temperature Transmitter and Radiator Fan Switches **RLS** Reverse Light Switches **VAR** Various

ERA S.p.A. Moncalieri (TO) Italy - tel: +39 011 6891511 - fax: +39 011 6472862 - www.eranet.it

Vehicle		Date	Engine	kW	OPS	BLS	TT-RF	RLS	VAR
1.8	Break (7E, N3, N5)	03/97-04/02	LFZ (XU7JP)	74	330023, 330026	330060	330109, 330122, 330147, 330188, 330271, 330588	330251, 330681	
	Convertible (7D, N3, N5)	03/94-04/02	LFZ (XU7JP)	74	330023, 330026	330060	330109, 330122, 330147, 330188, 330271, 330588	330251, 330681	
	Convertible (7D, N3, N5)	05/97-04/99	--	74				330681	
	Hatchback (7A, 7C, N3, N5)	05/93-05/01	LFZ (XU7JP)	74	330023, 330026	330060	330109, 330122, 330147, 330188, 330271, 330588	330251, 330681	
	Hatchback (7A, 7C, N3, N5)	05/97-04/99	LFZ (XU7JP)	74				330681	
1.8 16V	(7B, N3, N5)	03/97-05/01	LFY (XU7JP4)	81	330023, 330026	330060	330109, 330122, 330147, 330188, 330588	330251, 330681	
	Break (7E, N3, N5)	03/97-04/02	LFY (XU7JP4)	81	330023, 330026	330060	330109, 330122, 330147, 330188, 330588	330251, 330681	
	Convertible (7D, N3, N5)	07/00-04/02	LFY (XU7JP4)	81	330023, 330026	330060	330109, 330122, 330147, 330188, 330588	330251, 330681	
	Hatchback (7A, 7C, N3, N5)	03/97-05/01	LFY (XU7JP4)	81	330023, 330026	330060	330109, 330122, 330147, 330188, 330588	330251, 330681	
1.8 D	Hatchback (7A, 7C, N3, N5)	05/93-05/01	A9A (XUD7)	43	330023, 330026	330060	330109, 330147, 330188, 330272, 330588, 330639	330251, 330681	
	(7B, N3, N5)	05/97-06/00	--	44			330639	330681	
	Break (7E, N3, N5)	05/97-06/00	--	44			330639	330681	
	Hatchback (7A, 7C, N3, N5)	04/93-05/99	--	44			330639	330681	
1.8 ST	(7B, N3, N5)	06/94-05/01	LFZ (XU7JP)	74	330023, 330026	330060	330109, 330122, 330147, 330188, 330271, 330588	330251, 330681	
1.9 D	Hatchback (7A, 7C, N3, N5)	05/93-05/01	DJZ (XUD9Y)	47	330023	330060	330109, 330134, 330194, 330271, 330588, 330639	330251, 330681	
	Break (7E, N3, N5)	03/97-04/02	DJY (XUD9A)	50	330023, 330026	330060	330109, 330134, 330147, 330188, 330272, 330588, 330639	330251, 330681	
	Hatchback (7A, 7C, N3, N5)	06/94-05/01	DJY (XUD9A)	50	330023	330060	330109, 330134, 330194, 330271, 330588, 330639	330251, 330681	
	(7B, N3, N5)	09/98-05/01	WJY (DW8B), WJZ (DW8)	51	330026	330060	330155, 330188, 330551	330251, 330681	
	Break (7E, N3, N5)	09/98-04/02	WJY (DW8B), WJZ (DW8)	51	330026	330060	330155, 330188, 330551	330251, 330681	
	Break (7E, N3, N5)	05/97-05/99	DJY (XUD9A)	51			330639	330681	
	Hatchback (7A, 7C, N3, N5)	09/98-05/01	WJY (DW8B), WJZ (DW8)	51	330026	330060	330155, 330188, 330551	330251, 330681	
	Hatchback (7A, 7C, N3, N5)	04/93-05/99	XUD9	51			330639	330681	
	(7B, N3, N5)	02/94-04/97	XUD9TE	69				330681	
	Hatchback (7A, 7C, N3, N5)	04/93-04/97	XUD9TE	69				330681	
1.9 DT	Hatchback (7A, 7C, N3, N5)	05/93-05/01	DHY (XUD9TE)	66	330023, 330026	330060	330109, 330147, 330271, 330272, 330575, 330588	330251, 330681	

OPS Oil Pressure Switches **BLS** Brake Light Switches **TT-RF** Temperature Transmitter and Radiator Fan Switches **RLS** Reverse Light Switches **VAR** Various

Vehicle		Date	Engine	kW	OPS	BLS	TT-RF	RLS	VAR
1.9 SLD	(7B, N3, N5)	06/94-05/01	DJZ (XUD9Y)	47	330023	330060	330109, 330134, 330194, 330271, 330588, 330639	330251, 330681	
	(7B, N3, N5)	06/94-05/01	DJY (XUD9A)	50	330023	330060	330109, 330134, 330194, 330271, 330588, 330639	330251, 330681	
1.9 SRDT	(7B, N3, N5)	06/94-05/01	DHY (XUD9TE)	66	330023, 330026	330060	330109, 330147, 330271, 330272, 330575, 330588	330251, 330681	
1.9 STD	(7B, N3, N5)	02/94-10/95	XUD9	51			330639	330681	
1.9 TD	Break (7E, N3, N5)	02/97-04/02	DHY (XUD9TE)	66	330023, 330026	330060	330109, 330147, 330272, 330575, 330588	330251, 330681	
2.0	Convertible (7D, N3, N5)	03/94-04/02	RFX (XU10J2)	89	330023	330060	330109, 330122, 330147, 330188, 330271, 330588	330249	
	(7B, N3, N5)	03/97-05/01	RFV (XU10J4R)	97	330023, 330026	330060	330109, 330122, 330147, 330188, 330271, 330576, 330588	330251, 330681	
	Break (7E, N3, N5)	03/97-04/02	RFV (XU10J4R)	97	330023, 330026	330060	330109, 330122, 330147, 330188, 330271, 330576, 330588	330251, 330681	
	(7B, N3, N5)	05/97-06/00	RFV (XU10J4R)	99				330681	
2.0 16V	Convertible (7D, N3, N5)	03/97-04/02	RFV (XU10J4R)	97	330023, 330026	330060	330109, 330122, 330147, 330188, 330271, 330588	330251, 330681	
	Hatchback (7A, 7C, N3, N5)	03/97-05/01	RFV (XU10J4R)	97	330023, 330026	330060	330109, 330122, 330147, 330188, 330271, 330576, 330588	330251, 330681	
2.0 HDI 90	(7B, N3, N5)	06/99-05/01	RHY (DW10TD)	66	330026	330060, 330074	330551, 330742	330251, 330681	
	Break (7E, N3, N5)	06/99-04/02	RHY (DW10TD)	66	330026	330060, 330074	330551, 330742	330251, 330681	
	Hatchback (7A, 7C, N3, N5)	06/99-05/01	RHY (DW10TD)	66	330026	330060, 330074	330551, 330742	330251, 330681	
2.0 S16	(7B, N3, N5)	06/94-05/01	RFT (XU10J4)	110	330023	330060	330109, 330122, 330576, 330588	330251	
	Hatchback (7A, 7C, N3, N5)	06/94-05/01	RFT (XU10J4)	110	330023	330060	330109, 330122, 330576, 330588	330251	
	(7B, N3, N5)	06/94-05/01	RFY (XU10J4Z)	112	330023	330060	330109, 330122, 330576, 330588	330251	
	Hatchback (7A, 7C, N3, N5)	05/93-05/01	RFY (XU10J4Z)	112	330023	330060	330109, 330122, 330576, 330588	330251	
	Hatchback (7A, 7C, N3, N5)	03/96-05/01	RFS (XU10J4RS)	120	330023, 330026	330060	330109, 330122, 330588	330251, 330681	
2.0 ST	(7B, N3, N5)	07/94-05/01	RFX (XU10J2)	89	330023	330060	330109, 330122, 330147, 330188, 330271, 330576, 330588	330249	
2.0 XSi	Hatchback (7A, 7C, N3, N5)	05/93-05/01	RFX (XU10J2)	89	330023	330060	330109, 330122, 330147, 330188, 330271, 330576, 330588	330249	

OPS Oil Pressure Switches **BLS** Brake Light Switches **TT-RF** Temperature Transmitter and Radiator Fan Switches **RLS** Reverse Light Switches **VAR** Various

ERA S.p.A. Moncalieri (TO) Italy - tel: +39 011 6891511 - fax: +39 011 6472862 - www.eranet.it

Vehicle		Date	Engine	kW	OPS	BLS	TT-RF	RLS	VAR
307		**08/00 -**							
1.4	(3A/C)	08/00-	KFW (TU3JP)	55	330026	330629, 330704, 330713, 330718, 330722	330551, 330624, 330637	330513	
	Break (3E)	04/02-09/03	TU 3 JP	55	330026	330629, 330704, 330713, 330718, 330722	330551, 330637	330513	
	SW (3H)	04/02-09/03	TU 3 JP	55	330026	330629, 330704, 330713, 330718, 330722	330551, 330637	330513	
1.4 16V	(3A/C)	11/03-	KFU (ET3J4)	65	330026	330629, 330718, 330722	330552, 330624, 330645	330513	
	Break (3E)	11/03-	KFU (ET3J4)	65	330026	330629, 330718, 330722	330552, 330624, 330645	330513	
	SW (3H)	11/03-	KFU (ET3J4)	65	330026	330629, 330718, 330722	330552, 330624	330513	
1.4 HDi	(3A/C)	10/01-	8HX (DV4TD), 8HZ (DV4TD)	50	330026	330629, 330704, 330713, 330718, 330722	330502, 330645	330681	
	Break (3E)	03/02-	8HZ (DV4TD)	50	330026	330629, 330704, 330713, 330718, 330722	330502, 330645	330681	
1.6 16V	(3A/C)	08/00-	NFU (TU5JP4)	80	330026	330629, 330704, 330713, 330718, 330722	330502, 330551, 330552, 330624, 330637	330513, 330681	
	Break (3E)	03/02-	NFU (TU5JP4)	80	330026	330629, 330704, 330713, 330718, 330722	330502, 330551, 330552, 330624, 330637, 330645	330513, 330681	
	CC (3B)	03/05-	NFU (TU5JP4)	80	330026	330629, 330704, 330713, 330718, 330722	330552, 330624, 330637	330513, 330681	
	SW (3H)	03/02-	NFU (TU5JP4)	80	330026	330629, 330704, 330713, 330718, 330722	330502, 330551, 330552, 330624, 330637	330513, 330681	
1.6 BioFlex	(3A/C)	09/07-	NFU (TU5JP4)	80	330026	330629, 330722	330552, 330637	330513, 330681	
	Break (3E)	09/07-	NFU (TU5JP4)	80	330026	330629, 330722	330552, 330637	330513, 330681	
	SW (3H)	09/07-	NFU (TU5JP4)	80	330026	330629, 330722	330552, 330637	330513, 330681	
1.6 D	SW (3H)	12/06-	9HX (DV6ATED4)	66		330629, 330718, 330722		330681	
1.6 HDi	(3A/C)	04/05-	9HX (DV6ATED4)	66	330026	330629, 330718, 330722	330502	330681	
	Break (3E)	04/05-	9HX (DV6ATED4)	66	330026	330629, 330718, 330722	330502	330681	
1.6 HDi 110	(3A/C)	02/04-	9HY (DV6TED4)	80	330026	330629, 330718, 330722	330502, 330645	330681	
	Break (3E)	02/04-	9HY (DV6TED4)	80	330026	330629, 330718, 330722	330502, 330645	330681	
	SW (3H)	02/04-	9HY (DV6TED4)	80	330026	330629, 330718, 330722	330502	330681	
2.0	Break (3E)	03/02-	RFN (EW10J4)	100	330026	330629, 330704, 330713, 330718, 330722	330624, 330645	330681	
2.0 16V	(3A/C)	08/00-	RFN (EW10J4)	100	330026	330629, 330704, 330713, 330718, 330722	330624	330681	

OPS Oil Pressure Switches **BLS** Brake Light Switches **TT-RF** Temperature Transmitter and Radiator Fan Switches **RLS** Reverse Light Switches **VAR** Various

Vehicle		Date	Engine	kW	OPS	BLS	TT-RF	RLS	VAR
2.0 16V	CC (3B)	10/03-	RFN (EW10J4)	100	330026	330629, 330704, 330713, 330718, 330722	330624	330681	
	SW (3H)	03/02-	RFN (EW10J4)	100	330026	330629, 330704, 330713, 330718, 330722	330624	330681	
	(3A/C)	03/05-	RFJ (EW10A)	103	330026	330629, 330718, 330722	330502, 330645	330681	
	Break (3E)	03/05-	RFJ (EW10A)	103	330026	330629, 330718, 330722	330502, 330645	330681	
	CC (3B)	03/05-	RFJ (EW10A)	103	330026	330629, 330718, 330722	330502	330681	
	SW (3H)	03/05-	RFJ (EW10A)	103	330026	330629, 330718, 330722	330502	330681	
	(3A/C)	06/05-	RFK (EW10J4S)	130	330026	330629, 330718, 330722	330624, 330645	330681	
	Break (3E)	06/05-	RFK (EW10J4S)	130	330026	330629, 330718, 330722	330624, 330645	330681	
	CC (3B)	10/03-	RFK (EW10J4S)	130	330026	330629, 330718, 330722	330624	330681	
2.0 HDi 110	(3A/C)	08/00-	RHS (DW10ATED)	79	330026	330629, 330704, 330713, 330718, 330722	330502	330681	
2.0 HDI 110	Break (3E)	03/02-	RHS (DW10ATED)	79	330026	330629, 330704, 330713, 330718, 330722	330502	330681	
	SW (3H)	03/02-	RHS (DW10ATED)	79	330026	330629, 330704, 330713, 330718, 330722	330502	330681	
2.0 HDi 135	(3A/C)	10/03-	RHR (DW10BTED4)	100	330026	330629, 330718, 330722	330502, 330645	330513	
	Break (3E)	02/04-	RHR (DW10BTED4)	100	330026	330629, 330718, 330722	330502, 330645	330513	
	CC (3B)	06/05-	RHR (DW10BTED4)	100	330026	330629, 330718, 330722	330502	330513	
	SW (3H)	02/04-	RHR (DW10BTED4)	100	330026	330629, 330718, 330722	330502	330513	
2.0 HDi 90	(3A/C)	08/00-	RHY (DW10TD)	66	330026	330629, 330704, 330713, 330718, 330722	330502	330681	
2.0 HDI 90	Break (3E)	03/02-	RHY (DW10TD)	66	330026	330629, 330704, 330713, 330718, 330722	330502, 330645	330681	
	SW (3H)	03/02-	RHY (DW10TD)	66	330026	330629, 330704, 330713, 330718, 330722	330502	330681	
308			**09/07 -**						
1.4 16V	(4A_, 4C_)	09/07-	EP3	70	330026	330629, 330722	330552	330681	
	(4A_, 4C_)	12/09-	--	72		330722		330681	
1.6 16V	(4A_, 4C_)	09/07-	EP6	88	330026	330629, 330722	330552	330681	
	(4A_, 4C_)	09/07-	5FT (EP6DT)	103		330722		330681	
	(4A_, 4C_)	09/07-	EP6DT	110	330026	330629, 330722	330552	330681	
	(4A_, 4C_)	10/09-	EP6CDT	115		330722		330681	
	(4A_, 4C_)	03/08-	EP6DTS	128	330026	330629, 330722	330552	330681	

OPS Oil Pressure Switches **BLS** Brake Light Switches **TT-RF** Temperature Transmitter and Radiator Fan Switches **RLS** Reverse Light Switches **VAR** Various

ERA S.p.A. Moncalieri (TO) Italy - tel: +39 011 6891511 - fax: +39 011 6472862 - www.eranet.it

Vehicle		Date	Engine	kW	OPS	BLS	TT-RF	RLS	VAR
1.6 GTi	(4A_, 4C_)	07/10-	EP6CDTX	147		330722		330681	
1.6 HDi	(4A_, 4C_)	09/07-	--	66	330026	330629, 330722	330502	330681	
	(4A_, 4C_)	11/09-	--	68		330722		330681	
	(4A_, 4C_)	09/07-	9HZ (DV6TED4)	80	330026	330629, 330722	330502	330681	
	(4A_, 4C_)	12/09-	--	82		330722		330681	
2.0 HDi	(4A_, 4C_)	09/07-	RHR (DW10BTED4)	100	330026	330629, 330722	330502	330513	
	(4A_, 4C_)	07/10-	--	103		330722			
308 CC			**04/09 -**						
1.6 16V		06/09-	EP6	88		330722		330681	
		06/09-	5FT (EP6DT)	103		330722		330681	
		06/09-	EP6DT	110		330722		330681	
		06/09-	EP6CDT	115		330722		330681	
1.6 HDi		06/09-	--	82		330722		330681	
2.0 HDi		04/09-	RHR (DW10BTED4)	100		330722			
		04/09-	--	103		330722			
308 SW			**09/07 -**						
1.4 16V		09/07-	8FS (EP3)	70	330026	330629, 330722	330552	330681	
		12/09-	--	72		330722		330681	
1.6 16V		09/07-	EP6	88	330026	330629, 330722	330552	330681	
		09/07-	5FT (EP6DT)	103		330722		330681	
		09/07-	EP6DT	110	330026	330629, 330722	330552	330681	
		10/09-	EP6CDT	115		330722		330681	
		03/08-	5FY (EP6DTS)	128	330026	330629, 330722	330552	330681	
1.6 Bioflex		03/09-	NFU (TU5JP4)	82		330722	330637	330681	
1.6 HDi		09/07-	9HX (DV6ATED4)	66	330026	330629, 330722	330502	330681	
		09/07-	9HZ (DV6TED4)	80	330026	330629, 330722	330502	330681	
		12/09-	--	82		330722		330681	
2.0 Bioflex		01/08-	RFJ (EW10A)	103		330722		330681	
2.0 HDi		09/07-	RHR (DW10BTED4)	100	330026	330629, 330722	330502	330513	
		09/07-	--	103		330722			
309			**10/85 - 12/93**						
1.1	I (10C, 10A)	10/85-07/89	E1	40	330344	330438	330086, 330167, 330203, 330207, 330269	330236, 330251	
	II (3C, 3A)	09/89-10/93	H1B (TU1)	40	330010	330438	330158, 330167, 330180, 330188, 330203, 330207, 330269, 330271, 330272	330236, 330249, 330251	
	II (3C, 3A)	08/90-12/93	HDZ (TU1M)	44	330010	330438	330116, 330158, 330167, 330180, 330188, 330203, 330271, 330272	330236, 330249, 330251	

OPS Oil Pressure Switches **BLS** Brake Light Switches **TT-RF** Temperature Transmitter and Radiator Fan Switches **RLS** Reverse Light Switches **VAR** Various

Vehicle		Date	Engine	kW	OPS	BLS	TT-RF	RLS	VAR
1.3	I (10C, 10A)	10/85-07/89	G1A	47		330438			
1.4	I (10C, 10A)	03/89-07/89	K1D (TU3A)	49	330010	330438	330086, 330158, 330167, 330203, 330207, 330269	330236, 330251	
	II (3C, 3A)	07/90-12/93	K1D (TU3A)	49		330438			
	I (10C, 10A)	03/89-07/89	KDY (TU3M), KDZ (TU3M)	55	330010	330438	330116, 330158, 330167, 330203, 330207, 330269	330236, 330251	
	II (3C, 3A)	07/89-12/93	KDY (TU3M), KDZ (TU3M)	55	330010	330438	330158, 330167, 330180, 330188, 330203, 330207, 330269, 330271, 330272	330236, 330249, 330251	
	I (10C, 10A)	03/89-07/89	K2B (TU3S)	62	330010	330438	330086, 330158, 330167, 330203, 330207, 330269	330236, 330251	
1.5	I (10C, 10A)	06/87-12/89	Y2/K	63	330344	330438	330086, 330167, 330203, 330207, 330269	330236, 330249, 330251	
1.6	I (10C, 10A)	08/87-07/89	B1E (XU51C)	53	330010	330438	330086, 330158, 330167, 330203, 330207, 330269, 330527	330236, 330251	
	I (10C, 10A)	10/85-07/89	B1A (XU51C)	55	330010	330438	330086, 330158, 330167, 330203, 330207, 330269, 330527	330236, 330251	
	II (3C, 3A)	07/89-12/93	BDY (XU5M2Z), BDY (XU5M3Z), BDZ (XU5M)	65	330010	330438	330086, 330116, 330158, 330167, 330180, 330188, 330203, 330207, 330269, 330271, 330272, 330527	330236, 330249, 330251	
	II (3C, 3A)	07/89-12/93	B2A (XU52C/K)	68	330010	330438	330086, 330158, 330167, 330180, 330188, 330203, 330207, 330269, 330271, 330272, 330527	330236, 330249, 330251	
	I (10C, 10A)	01/86-07/89	--	69	330344	330438	330086, 330167, 330203, 330207, 330269	330236, 330251	
	II (3C, 3A)	07/89-12/93	B2A (XU52C/K)	69	330344	330438	330086, 330167, 330180, 330188, 330203, 330207, 330269, 330271, 330272	330236, 330249, 330251	
	I (10C, 10A)	11/85-09/88	180Z (XU5J), B6B (XU5J)	76	330010	330438	330086, 330116, 330158, 330167, 330203, 330207, 330269, 330527	330236, 330251	
1.6 CAT	I (10C, 10A)	09/86-12/89	BAZ (XU5CP)	55	330010	330438	330086, 330158, 330167, 330203, 330207, 330269, 330527	330236, 330249, 330251	

OPS Oil Pressure Switches **BLS** Brake Light Switches **TT-RF** Temperature Transmitter and Radiator Fan Switches **RLS** Reverse Light Switches **VAR** Various

ERA S.p.A. Moncalieri (TO) Italy - tel: +39 011 6891511 - fax: +39 011 6472862 - www.eranet.it

Vehicle		Date	Engine	kW	OPS	BLS	TT-RF	RLS	VAR
1.6 GTi	II (3C, 3A)	09/89-10/93	--	85	330010	330438	330086, 330158, 330167, 330180, 330188, 330203, 330207, 330269, 330271, 330272, 330527	330236, 330249, 330251	
1.8 Diesel	II (3C, 3A)	07/89-12/93	161A (XUD7)	44	330010	330438	330086, 330109, 330158, 330167, 330180, 330188, 330203, 330207, 330269, 330271, 330272, 330527, 330554	330236, 330249, 330251	
1.8 TD	II (3C, 3A)	08/89-12/93	A8B (XUD7TE)	57	330010	330438	330086, 330147, 330167, 330180, 330188, 330203, 330207, 330269, 330271, 330272	330236, 330249, 330251	
1.9	I (10C, 10A)	03/86-07/89	DFZ (XU9J1)	72	330010	330438	330086, 330116, 330158, 330167, 330203, 330207, 330269, 330527	330236, 330251	
	II (3C, 3A)	08/89-12/93	DFZ (XU9J1)	72		330438			
	I (10C, 10A)	10/85-07/89	D2B (XU9S)	75		330438			
	I (10C, 10A)	07/88-07/89	DDZ (XU9M)	80		330438			
	II (3C, 3A)	10/90-12/93	DDZ (XU9M)	80	330010	330438	330086, 330116, 330158, 330167, 330180, 330188, 330203, 330207, 330269, 330271, 330272, 330527	330236, 330249, 330251	
1.9 D	I (10C, 10A)	06/86-07/89	162 (XUD9), D9A (XUD9)	47	330010	330438	330086, 330158, 330167, 330203, 330207, 330269, 330527	330236, 330251	
1.9 Diesel	II (3C, 3A)	07/89-12/93	162 (XUD9), D9A (XUD9), DJZ (XUD9Y)	47	330010	330438	330086, 330109, 330158, 330167, 330180, 330188, 330203, 330271, 330272	330236, 330249, 330251	
1.9 GTI	I (10C, 10A)	07/88-07/89	DKZ (XU9JAZ)	88		330438			
	II (3C, 3A)	07/89-12/93	DKZ (XU9JAZ)	88	330010	330438	330086, 330116, 330158, 330167, 330180, 330188, 330203, 330207, 330269, 330271, 330272, 330527	330236, 330249, 330251	
	I (10C, 10A)	10/86-07/89	D6B (XU9JA (G-KAT))	94	330010	330438	330086, 330116, 330158, 330167, 330203, 330207, 330269, 330527	330236, 330251	
1.9 GTI 16V	II (3C, 3A)	10/90-12/93	DFW (XU9J4Z)	108		330438			
	II (3C, 3A)	08/89-07/90	D6C (XU9J4)	116	330010	330438	330086, 330116, 330158, 330167, 330180, 330188, 330203, 330207, 330269, 330271, 330272	330236, 330249, 330251	

OPS Oil Pressure Switches **BLS** Brake Light Switches **TT-RF** Temperature Transmitter and Radiator Fan Switches **RLS** Reverse Light Switches **VAR** Various

Vehicle		Date	Engine	kW	OPS	BLS	TT-RF	RLS	VAR
4007			**02/07 -**						
2.2 HDi	(GP_)	02/07-	4HN (DW12MTED4)	115	330026	330081, 330738	330502		
2.4 16V	(GP_)	01/08-	--	125	330539	330081, 330738	330619		
405			**01/87 - 10/96**						
1.4	I (15B)	01/87-07/92	TU 3	47	330010	330052	330086, 330158, 330180, 330188, 330207, 330269, 330271, 330272	330236, 330249, 330251	
	II (4B)	08/92-10/95	KDX (TU3MC)	55		330060			
	II Break (4E)	08/92-10/96	KDX (TU3MC)	55		330060			
1.6	I (15B)	07/87-12/92	B1E (XU51C)	53	330010	330052	330086, 330158, 330180, 330188, 330207, 330269, 330271, 330272	330236, 330249, 330251	
	I Break (15E)	10/88-08/92	B1E (XU51C)	53	330010	330052	330086, 330158, 330180, 330188, 330207, 330269, 330271, 330272	330236, 330249, 330251	
	I (15B)	07/87-06/88	B1E (XU51C), BAZ (XU5CP)	55	330010	330052	330086, 330158, 330180, 330188, 330207, 330269, 330271, 330272	330236, 330249, 330251	
	I Break (15E)	10/88-08/92	BAZ (XU5CP)	55		330052			
	I (15B)	07/87-12/92	BDY (XU5M2Z), BDZ (XU5M)	65	330010	330052	330086, 330110, 330158, 330180, 330188, 330207, 330269, 330271, 330272	330236, 330249, 330251	
	I Break (15E)	10/88-08/92	BDY (XU5M2Z), BDY (XU5M3Z), BDZ (XU5M)	65	330010	330052	330086, 330110, 330158, 330180, 330188, 330207, 330269, 330271, 330272	330236, 330249, 330251	
	II (4B)	08/92-10/95	BDY (XU5M2Z), BDY (XU5M3Z), BDZ (XU5M), BFZ (XU5JP)	65	330023	330060	330086, 330109, 330271, 330272, 330554	330251	
	II Break (4E)	08/92-10/96	BDY (XU5M2Z), BDY (XU5M3Z), BDZ (XU5M), BFZ (XU5JP)	65	330023	330060	330086, 330109, 330271, 330272, 330554	330251	
	I (15B)	10/89-12/92	BDZ (XU5M)	66	330010	330052	330086, 330110, 330158, 330180, 330188, 330207, 330269, 330271, 330272	330236, 330249, 330251	
	I Break (15E)	10/88-08/92	BDZ (XU5M)	66	330010	330052	330086, 330110, 330158, 330180, 330188, 330207, 330269, 330271, 330272	330236, 330249, 330251	
	I (15B)	01/87-12/92	B2A (XU52C/K)	69	330010	330052	330086, 330158, 330180, 330188, 330207, 330269, 330271, 330272	330236, 330249, 330251	

OPS Oil Pressure Switches **BLS** Brake Light Switches **TT-RF** Temperature Transmitter and Radiator Fan Switches **RLS** Reverse Light Switches **VAR** Various

ERA S.p.A. Moncalieri (TO) Italy - tel: +39 011 6891511 - fax: +39 011 6472862 - www.eranet.it

Vehicle		Date	Engine	kW	OPS	BLS	TT-RF	RLS	VAR
1.6	I Break (15E)	10/88-08/92	--	69	330010	330052	330086, 330158, 330180, 330188, 330207, 330269, 330271, 330272	330236, 330249, 330251	
1.6 SRi 4x4	I Break (15E)	04/88-07/92	BDZ (XU5M)	65	330010	330052	330086, 330110, 330158, 330180, 330188, 330207, 330269, 330271, 330272	330236, 330249, 330251	
1.8	II (4B)	08/92-10/95	LFZ (XU7JP)	74	330023	330060	330109, 330122, 330147, 330271, 330272, 330588	330251	
	II Break (4E)	08/92-10/96	LFZ (XU7JP)	74	330023	330060	330109, 330122, 330147, 330271, 330272, 330588	330251	
1.8 TD	I Break (15E)	10/88-08/92	A8A (XUD7TE), AJZ (XUD7TEY)	66	330010	330052	330086, 330109, 330158, 330180, 330188, 330207, 330269, 330271, 330272	330236, 330249, 330251	
1.8 Turbo Diesel	I (15B)	03/88-12/92	A8A (XUD7TE), AJZ (XUD7TEY)	66	330010	330052	330086, 330109, 330158, 330180, 330188, 330207, 330269, 330271, 330272	330236, 330249, 330251	
1.9	I (15B)	07/87-12/92	D2C (XU92C (U-KAT))	70	330010	330052	330086, 330158, 330180, 330188, 330207, 330269, 330271, 330272	330236, 330249, 330251	
	I Break (15E)	10/88-08/92	D2C (XU92C (U-KAT))	70	330010	330052	330086, 330158, 330180, 330188, 330207, 330269, 330271, 330272	330236, 330249, 330251	
	I Break (15E)	10/88-08/92	DFZ (XU9J1)	77	330010	330052	330086, 330116, 330158, 330180, 330188, 330207, 330269, 330271, 330272	330236, 330249, 330251	
	I (15B)	07/88-12/92	DDZ (XU9M)	80	330010	330052	330086, 330116, 330158, 330180, 330188, 330207, 330269, 330271, 330272	330236, 330249, 330251	
	I Break (15E)	10/88-08/92	DDZ (XU9M)	80	330010	330052	330086, 330116, 330158, 330180, 330188, 330207, 330269, 330271, 330272	330236, 330249, 330251	
	I (15B)	07/88-12/92	DKZ (XU9JAZ)	88	330010	330052	330086, 330116, 330158, 330180, 330188, 330207, 330269, 330271, 330272	330236, 330249, 330251	
	I Break (15E)	10/88-08/92	DKZ (XU9JAZ)	88	330010	330052	330086, 330116, 330158, 330180, 330188, 330207, 330269, 330271, 330272	330236, 330249, 330251	

OPS Oil Pressure Switches **BLS** Brake Light Switches **TT-RF** Temperature Transmitter and Radiator Fan Switches **RLS** Reverse Light Switches **VAR** Various

Vehicle		Date	Engine	kW	OPS	BLS	TT-RF	RLS	VAR
1.9 4x4	I (15B)	07/88-12/92	DDZ (XU9M)	80	330010	330052	330086, 330116, 330158, 330180, 330188, 330207, 330269, 330271, 330272	330236, 330249, 330251	
	I Break (15E)	10/88-08/92	DDZ (XU9M)	80	330010	330052	330086, 330116, 330158, 330180, 330188, 330207, 330269, 330271, 330272	330236, 330249, 330251	
1.9 D	I Break (15E)	10/88-08/92	DJZ (XUD9Y)	47		330052			
	II (4B)	08/92-10/95	DJZ (XUD9Y)	47		330060			
	II Break (4E)	08/92-10/96	DJZ (XUD9Y)	47		330060			
	II (4B)	06/94-10/95	DJY (XUD9A)	50	330023	330060	330086, 330109, 330147, 330158, 330271, 330272, 330554, 330588, 330639	330251	
	II Break (4E)	06/94-10/96	DJY (XUD9A)	50	330023	330060	330086, 330109, 330147, 330158, 330271, 330272, 330554, 330588, 330639	330251	
	I Break (15E)	10/88-08/92	D9B (XUD9A), DJY (XUD9A)	51	330010	330052	330086, 330109, 330158, 330180, 330188, 330207, 330269, 330271, 330272	330236, 330249, 330251	
1.9 Diesel	I (15B)	07/88-09/92	DJZ (XUD9Y)	47		330052			
	I (15B)	03/88-12/92	D9B (XUD9A)	51	330010	330052	330086, 330109, 330158, 330180, 330188, 330207, 330269, 330271, 330272	330236, 330249, 330251	
1.9 Injection	I (15B)	07/87-12/92	DFZ (XU9J1)	77	330010	330052	330086, 330116, 330158, 330180, 330188, 330207, 330269, 330271, 330272	330236, 330249, 330251	
1.9 Sport MI-16	I (15B)	04/88-12/92	DFW (XU9J4Z)	108	330010	330052	330086, 330116, 330158, 330180, 330188, 330207, 330269, 330271, 330272	330236, 330249, 330251	
	I (15B)	07/87-11/91	D6C (XU9J4)	116	330010	330052	330086, 330116, 330158, 330180, 330188, 330207, 330269, 330271, 330272	330236, 330249, 330251	
1.9 SPort MI-16 4x4	I (15B)	04/88-12/92	DFW (XU9J4Z)	108	330010	330052	330086, 330116, 330158, 330180, 330188, 330207, 330269, 330271, 330272	330236, 330249, 330251	
1.9 TD	II (4B)	08/92-10/95	DHY (XUD9TE)	66	330023	330060	330109, 330147, 330158, 330271, 330272, 330575, 330588	330251	

OPS Oil Pressure Switches **BLS** Brake Light Switches **TT-RF** Temperature Transmitter and Radiator Fan Switches **RLS** Reverse Light Switches **VAR** Various

ERA S.p.A. Moncalieri (TO) Italy - tel: +39 011 6891511 - fax: +39 011 6472862 - www.eranet.it

Vehicle		Date	Engine	kW	OPS	BLS	TT-RF	RLS	VAR
1.9 TD	II Break (4E)	08/92-10/96	DHY (XUD9TE)	66	330023	330060	330109, 330147, 330158, 330271, 330272, 330575, 330588	330251	
2.0	II (4B)	08/92-10/95	RFX (XU10J2)	89	330023	330060	330109, 330122, 330147, 330271, 330272, 330588	330251	
	II Break (4E)	08/92-10/96	RFX (XU10J2)	89	330023	330060	330109, 330122, 330147, 330271, 330272, 330588	330251	
2.0 4x4	II Break (4E)	08/92-10/96	RFX (XU10J2)	89	330023	330060	330109, 330122, 330147, 330271, 330272, 330588	330251	
2.0 X4	II (4B)	08/92-10/95	RFX (XU10J2)	89	330023	330060	330109, 330122, 330147, 330271, 330272, 330588	330251	
2.0 16V	II (4B)	06/94-10/95	RFT (XU10J4)	110	330023	330060	330109, 330122, 330147, 330271, 330272, 330588	330251	
2.0 MI-16	II (4B)	08/92-10/95	RFY (XU10J4Z)	112		330060			
2.0 T 16 X4	II (4B)	08/92-10/95	RGZ (XU10J4TE/Z)	144	330023	330060	330109, 330122, 330271, 330272, 330588	330249	
406			**10/95 - 12/04**						
1.6	(8B)	11/95-05/04	BFZ (XU5JP)	65	330023, 330026	330060, 330074, 330704, 330714	330109, 330122, 330147, 330188, 330588	330251, 330681	
1.8	(8B)	05/97-05/04	LFX (XU7JB)	66	330023, 330026	330060, 330074, 330704, 330714	330109, 330122, 330147, 330188, 330588	330251, 330681	
	Break (8E/F)	05/97-10/04	LFX (XU7JB)	66	330023, 330026	330060, 330074, 330704, 330714	330109, 330122, 330147, 330188, 330588	330251, 330681	
	(8B)	10/96-03/99	LFZ (XU7JP)	74	330023, 330026	330060, 330074	330109, 330122, 330147, 330188, 330588	330251, 330681	
	Break (8E/F)	10/96-03/99	LFZ (XU7JP)	74	330023, 330026	330060, 330074	330109, 330122, 330147, 330188, 330588	330251, 330681	
1.8 16V	(8B)	11/95-10/00	LFY (XU7JP4)	81	330023, 330026	330060, 330074, 330704, 330714	330109, 330122, 330147, 330188, 330271, 330588	330251, 330681	
	Break (8E/F)	10/96-10/00	LFY (XU7JP4)	81	330023, 330026	330060, 330074, 330704, 330714	330109, 330122, 330147, 330188, 330271, 330588	330251, 330681	
	(8B)	10/00-05/04	6FZ (EW7J4)	85	330026	330060, 330074, 330704, 330714	330624	330251, 330681	
	Break (8E/F)	10/00-10/04	6FZ (EW7J4)	85	330026	330060, 330074, 330704, 330714	330624	330251, 330681	
1.9 D	(8B)	10/96-05/04	DHW (XUD9SD)	55	330023	330060, 330074, 330704, 330714	330109, 330147, 330271, 330272, 330575, 330588	330251	
	Break (8E/F)	10/96-10/04	DHW (XUD9SD)	55	330023	330060, 330074, 330704, 330714	330109, 330147, 330271, 330272, 330575, 330588	330251	

OPS Oil Pressure Switches **BLS** Brake Light Switches **TT-RF** Temperature Transmitter and Radiator Fan Switches **RLS** Reverse Light Switches **VAR** Various

Vehicle		Date	Engine	kW	OPS	BLS	TT-RF	RLS	VAR
1.9 TD	(8B)	01/96-05/04	DHX (XUD9TE)	66	330023	330060, 330074, 330704, 330714	330109, 330134, 330271, 330575, 330588	330251	
	Break (8E/F)	10/96-10/04	DHX (XUD9TE)	66	330023	330060, 330074, 330704, 330714	330109, 330134, 330271, 330575, 330588	330251	
	(8B)	01/96-05/04	DHY (XUD9TE)	68	330023	330060, 330074, 330704, 330714	330109, 330134, 330271, 330575, 330588	330251	
2.0 16V	(8B)	11/95-05/04	RFV (XU10J4R)	97	330026	330060, 330074, 330704, 330714	330109, 330122, 330147, 330588	330251, 330681	
	Break (8E/F)	10/96-10/04	RFV (XU10J4R)	97	330026	330060, 330074, 330704, 330714	330109, 330122, 330147, 330588	330251, 330681	
	Coupe (8C)	03/97-12/04	RFV (XU10J4R)	97	330026	330060, 330074, 330704, 330714	330109, 330122, 330147, 330588	330251, 330681	
	(8B)	01/99-08/00	RFR (DEW10J4)	99	330026	330060, 330074, 330704, 330714	330624	330251, 330681	
	Break (8E/F)	01/99-10/00	RFR (DEW10J4)	99	330026	330060, 330074, 330704, 330714	330624	330251, 330681	
	Coupe (8C)	01/99-10/00	RFR (DEW10J4)	99	330026	330060, 330074, 330704, 330714	330624	330251, 330681	
	(8B)	08/00-05/04	RFN (EW10J4)	100	330026	330060, 330074, 330704, 330714	330624	330251, 330681	
	Break (8E/F)	10/00-10/04	RFN (EW10J4)	100	330026	330060, 330074, 330704, 330714	330624	330251, 330681	
	Coupe (8C)	10/00-12/04	RFN (EW10J4)	100	330026	330060, 330074, 330704, 330714	330624	330251, 330681	
2.0 16V HPi	(8B)	05/01-05/04	RLZ (EW10D)	103	330026	330060, 330074, 330704, 330714	330624	330251, 330681	
	Break (8E/F)	05/01-10/04	RLZ (EW10D)	103	330026	330060, 330074, 330704, 330714	330624	330251, 330681	
2.0 HDi 110	(8B)	08/01-05/04	RHS (DW10ATED)	79	330026	330060, 330074, 330704, 330714	330502, 330624, 330645	330249, 330513	
	Break (8E/F)	08/01-10/04	RHS (DW10ATED)	79	330026	330060, 330074, 330704, 330714	330502, 330624, 330645	330249, 330513	
2.0 HDI 110	(8B)	06/98-08/01	RHZ (DW10ATED)	80	330026	330060, 330074, 330704, 330714	330502, 330551, 330624	330249, 330513	
	Break (8E/F)	02/99-04/04	RHZ (DW10ATED)	80	330026	330060, 330074, 330704, 330714	330502, 330551, 330624	330249, 330513	
2.0 HDI 90	(8B)	02/99-05/04	RHY (DW10TD)	66	330026	330060, 330074, 330704, 330714, 330715	330502, 330551, 330624	330251, 330681	
	Break (8E/F)	02/99-10/04	RHY (DW10TD)	66	330026	330060, 330074, 330704, 330714, 330715	330502, 330551, 330624	330251, 330681	
2.0 Turbo	(8B)	04/96-05/04	RGX (XU10J2TE)	108	330023, 330026	330060, 330074, 330704, 330714	330588	330249	
	Break (8E/F)	10/96-10/04	RGX (XU10J2TE)	108	330023, 330026	330060, 330074, 330704, 330714	330588	330249	
2.1 TD 12V	(8B)	01/96-05/04	P8C (XUD11BTE)	80	330023	330060, 330074, 330704, 330714	330109, 330134, 330576, 330588	330249	
	Break (8E/F)	10/96-10/04	P8C (XUD11BTE)	80	330023	330060, 330074, 330704, 330714	330109, 330134, 330576, 330588	330249	
2.2	(8B)	07/00-05/04	3FZ (EW12J4)	116	330026	330060, 330074, 330704, 330714, 330715	330624	330513	

OPS Oil Pressure Switches **BLS** Brake Light Switches **TT-RF** Temperature Transmitter and Radiator Fan Switches **RLS** Reverse Light Switches **VAR** Various

ERA S.p.A. Moncalieri (TO) Italy - tel: +39 011 6891511 - fax: +39 011 6472862 - www.eranet.it

Vehicle		Date	Engine	kW	OPS	BLS	TT-RF	RLS	VAR
2.2	Break (8E/F)	07/00-10/04	3FZ (EW12J4)	116	330026	330060, 330074, 330704, 330714, 330715	330624	330513	
	Coupe (8C)	03/02-12/04	3FZ (EW12J4)	116	330026	330060, 330074, 330704, 330714, 330715	330624, 330645	330513	
2.2 HDi	(8B)	03/00-05/04	4HX (DW12TED4/FAP)	98	330026	330060, 330704, 330714, 330715	330502	330513	
2.2 HDI	Break (8E/F)	03/00-10/04	4HX (DW12TED4/FAP)	98	330026	330060, 330704, 330714, 330715	330502	330513	
	Coupe (8C)	03/00-12/04	4HX (DW12TED4/FAP)	98	330026	330060, 330704, 330714, 330715	330502	330513	
3.0 24V	(8B)	10/96-05/04	XFZ (ES9J4)	140	330023, 330026	330060, 330074, 330704, 330714	330588, 330657	330249, 330513	
	Break (8E/F)	10/96-10/04	XFZ (ES9J4)	140	330023, 330026	330060, 330074, 330704, 330714	330588, 330657	330249, 330513	
3.0 V6	(8B)	03/00-05/04	XFX (ES9J4S)	152	330026	330060, 330704, 330714, 330715	330624	330249, 330513	
	Break (8E/F)	03/00-10/04	XFX (ES9J4S)	152	330026	330060, 330704, 330714, 330715	330624	330249, 330513	
	Coupe (8C)	03/00-12/04	XFX (ES9J4S)	152	330026	330060, 330704, 330714, 330715	330624	330249, 330513	
3.0 V6 24V	Coupe (8C)	03/97-12/04	XFZ (ES9J4)	140	330023, 330026	330060, 330074, 330704, 330714	330588, 330657	330249, 330513	
407			**05/04 -**						
1.6 HDi 110	(6D_)	05/04-	9HY (DV6TED4)	80	330026	330629, 330722	330502	330681	
	SW (6E_)	05/04-	9HY (DV6TED4)	80	330026	330629, 330722	330502	330681	
1.8	(6D_)	05/04-	6FZ (EW7J4)	85	330026	330629, 330722	330624	330681	
	SW (6E_)	05/04-	6FZ (EW7J4)	85	330026	330629, 330722	330624	330681	
1.8 16V	(6D_)	09/05-	6FY (EW7A)	92	330026	330629, 330722	330502	330681	
	SW (6E_)	09/05-	6FY (EW7A)	92	330026	330629, 330722	330502	330681	
2.0	(6D_)	05/04-	RFN (EW10J4)	100	330026	330629, 330722	330624	330681	
	SW (6E_)	05/04-	RFN (EW10J4)	100	330026	330629, 330722	330624	330681	
2.0 16V	(6D_)	09/05-	RFJ (EW10A)	103	330026	330629, 330722	330502, 330624	330681	
	SW (6E_)	09/05-	RFJ (EW10A)	103	330026	330629, 330722	330502, 330624	330681	
2.0 Bioflex	SW (6E_)	01/08-	RFJ (EW10A)	103		330722		330681	
2.0 HDi	Coupe (6C_)	10/05-	RHR (DW10BTED4)	100	330026	330629, 330722	330502	330513	
	(6D_)	08/08-	--	103		330722			
	SW (6E_)	08/08-	--	103		330722			
	(6D_)	07/09-	RHH (DW10CTED4)	120		330722			
	Coupe (6C_)	06/09-	RHH (DW10CTED4)	120		330722			
	SW (6E_)	07/09-	RHH (DW10CTED4)	120		330722			
2.0 HDi 135	(6D_)	05/04-	RHR (DW10BTED4)	100	330026	330629, 330722	330502	330513	
	SW (6E_)	05/04-	RHR (DW10BTED4)	100	330026	330629, 330722	330502	330513	
2.2	(6D_)	05/04-	3FZ (EW12J4)	116	330026	330629, 330722	330502	330513	
	SW (6E_)	05/04-	3FZ (EW12J4)	116	330026	330629, 330722	330502	330513	

OPS Oil Pressure Switches **BLS** Brake Light Switches **TT-RF** Temperature Transmitter and Radiator Fan Switches **RLS** Reverse Light Switches **VAR** Various

Vehicle		Date	Engine	kW	OPS	BLS	TT-RF	RLS	VAR
2.2 16V	(6D_)	09/05-	3FY (EW12J4)	120	330026	330629, 330722	330502	330513	
	Coupe (6C_)	10/05-	3FY (EW12J4)	120	330026	330629, 330722	330502	330513	
	SW (6E_)	09/05-	3FY (EW12J4)	120	330026	330629, 330722	330502	330513	
2.2 HDi	(6D_)	06/08-	4HP (DW12BTED4)	120		330722			
	SW (6E_)	06/08-	4HP (DW12BTED4)	120		330722			
2.2 HDi 170	(6D_)	05/06-	4HT (DW12BTED4)	125	330026	330629, 330722	330502	330513	
	SW (6E_)	05/06-	4HT (DW12BTED4)	125	330026	330629, 330722	330502	330513	
2.7 HDi	(6D_)	10/05-	UHZ (DT17)	150		330629			
	Coupe (6C_)	10/05-	UHZ (DT17)	150		330629			
	SW (6E_)	10/05-	UHZ (DT17)	150		330629			
3.0	(6D_)	05/04-	XFV (ES9A)	155	330026	330629, 330722	330624	330513	
	SW (6E_)	05/04-	XFV (ES9A)	155	330026	330629, 330722	330624	330513	
3.0 V6	Coupe (6C_)	10/05-	XFV (ES9A)	155	330026	330629, 330722	330624	330513	
5008			**09/09 -**						
1.6 16V		09/09-	EP6	88		330722		330681	
		09/09-	EP6CDT	115		330722		330681	
1.6 HDi		09/09-	9HZ (DV6TED4)	80		330722		330681	
2.0 HDi		06/09-	RHE (DW10CTED4)	110		330722			
		09/09-	RHH (DW10CTED4)	120		330722			
504			**07/68 - 07/86**						
1.8	(A_, M_)	01/71-06/83	XM7	58		330438	330086, 330266, 330531		
2.3 D	(A_, M_)	07/75-12/83	134 (XD2)	51		330438	330086, 330169, 330266, 330267, 330292, 330531		
505			**05/79 - 12/93**						
1.8	(551A)	06/81-10/85	105 (XM7)	55	330003	330052, 330438	330158, 330167, 330203, 330207, 330531		
	(551A)	01/82-10/85	105 (XM7)	60	330003	330052, 330438	330158, 330167, 330203, 330207, 330531		
	(551A)	09/85-10/86	105C (XM7A)	62	330003	330052, 330438	330158, 330167, 330203, 330207, 330531		
2.0	(551A)	09/85-09/91	106E (XN1A)	72	330003	330438	330158, 330167, 330203, 330207, 330531		
	Break (551D)	09/85-11/87	106E (XN1A)	72	330003	330438	330158, 330167, 330203, 330207, 330531		
2.0 TI,STI	(551A)	08/79-10/86	829 (ZEJ)	81		330052, 330438	330086, 330167, 330203, 330207, 330527		

OPS Oil Pressure Switches **BLS** Brake Light Switches **TT-RF** Temperature Transmitter and Radiator Fan Switches **RLS** Reverse Light Switches **VAR** Various

ERA S.p.A. Moncalieri (TO) Italy - tel: +39 011 6891511 - fax: +39 011 6472862 - www.eranet.it

Vehicle		Date	Engine	kW	OPS	BLS	TT-RF	RLS	VAR
2.2	(551A)	03/86-12/93	851X (ZDJL)	84	330003	330052, 330438	330086, 330158, 330167, 330203, 330207, 330527		
	Break (551D)	01/86-12/93	851X (ZDJL)	84	330003	330052, 330438	330086, 330158, 330167, 330203, 330207, 330527		
	(551A)	05/81-10/84	851 (ZDJ)	85	330003	330052, 330438	330086, 330158, 330167, 330203, 330207, 330527		
2.2 GTI	(551A)	08/83-12/93	851B (ZDJL)	90	330003	330052, 330438	330086, 330158, 330167, 330203, 330207, 330527		
	Break (551D)	09/85-12/86	851B (ZDJL)	90	330003	330052, 330438	330086, 330158, 330167, 330203, 330207, 330527		
2.3 Diesel	Break (551D)	04/82-06/86	147 (XD2S)	59	330010	330052, 330438	330086, 330169, 330203, 330266, 330292, 330527		
2.3 Turbo Diesel	(551A)	09/80-06/86	147 (XD2S)	59	330010	330052, 330438	330086, 330169, 330203, 330266, 330292, 330527		
2.5 Diesel	(551A)	10/81-11/90	155 (XD3)	51	330010	330052, 330438	330086, 330169, 330203, 330266, 330292, 330527		
	(551A)	06/81-12/93	155 (XD3)	55	330010	330052, 330438	330086, 330169, 330203, 330266, 330292, 330527		
2.5 Turbo Diesel	(551A)	10/83-12/90	XD3T	70	330010	330052, 330438	330086, 330158, 330169, 330203, 330266, 330292		
604			**08/77 - 07/87**						
2.5 TD	(561A_)	08/83-12/86	152A (XD3T)	66	330010	330438	330086, 330167		
2.7 SL	(561A_)	08/77-05/83	112 (ZM)	100		330438	330086, 330292		
2.7 TI,STI	(561A_)	08/77-05/83	140 (ZMJ)	106		330438	330086, 330292		
605			**06/89 - 09/99**						
2.0	(6B)	02/90-09/99	--	79	330023	330052	330109, 330215, 330272	330249, 330251	
	(6B)	06/89-09/99	R5A (XU102C)	84	330023	330052	330109, 330147, 330272, 330588	330249, 330251	
	(6B)	06/89-09/99	RFZ (XU10J2Z)	89	330023	330052	330110, 330116, 330147, 330272, 330588	330251	
2.0 16V	(6B)	07/94-09/99	RFV (XU10J4R)	97	330023	330052	330109, 330122, 330147, 330588	330249, 330251	
2.0 Turbo	(6B)	07/92-09/99	RGY (XU10J2TE)	104	330023	330052		330249	
	(6B)	07/91-09/99	RGX (XU10J2TE)	108	330023	330052		330249	
2.1 D	(6B)	06/89-07/95	P9A (XUD11A)	60	330010, 330023	330052	330109, 330147, 330215, 330272, 330588	330249, 330251	
2.1 Turbo Diesel	(6B)	06/89-09/99	PHZ (XUD11ATE)	80	330023	330052	330109, 330134, 330147, 330588	330249	
2.5 Turbo Diesel	(6B)	07/94-09/99	THY (DK5ATE)	95	330023	330052	330109, 330122, 330588	330249, 330251	

OPS Oil Pressure Switches **BLS** Brake Light Switches **TT-RF** Temperature Transmitter and Radiator Fan Switches **RLS** Reverse Light Switches **VAR** Various

Vehicle		Date	Engine	kW	OPS	BLS	TT-RF	RLS	VAR
3.0	(6B)	10/89-09/99	UFZ (ZPJ)	123	330023	330052	330109, 330110, 330147, 330588	330249, 330251	
3.0 SV 24	(6B)	08/89-09/99	UKZ (ZPJ4/Z)	147	330023	330052	330109, 330110, 330147, 330215, 330588	330249	
607			**01/00 -**						
2.0	(9D, 9U)	02/00-	RFN (EW10J4)	100	330026	330704, 330713, 330715, 330718	330624, 330645	330513	
2.0 HDi	(9D, 9U)	03/01-07/04	RHS (DW10ATED)	79	330026	330704, 330713, 330715, 330718	330502	330513	
2.0 HDI	(9D, 9U)	05/00-	RHZ (DW10ATED)	80	330026	330704, 330713, 330715, 330718	330502, 330645	330513	
	(9D, 9U)	09/05-	RHR (DW10BTED4)	100	330026	330629, 330715	330502, 330645	330513	
2.2 16V	(9D, 9U)	02/00-	3FZ (EW12J4)	116	330026	330704, 330713, 330715, 330718	330502, 330624	330513	
	(9D, 9U)	09/05-	3FY (EW12J4)	120	330026	330629, 330715	330502, 330645	330513	
2.2 HDI	(9D, 9U)	02/00-	4HX (DW12TED4/FAP)	98	330026	330704, 330713, 330715, 330718	330502	330513	
2.2 HDi	(9D, 9U)	05/06-	4HT (DW12BTED4)	125	330026	330629, 330715	330502		
2.7 HDi 24V	(9D, 9U)	12/04-	DT17TED4	150		330629	330645		
3.0 V6 24V	(9D, 9U)	02/00-	XFX (ES9J4S)	152	330026	330704, 330713, 330715, 330718	330624	330513	
	(9D, 9U)	03/04-	XFV (ES9A)	155	330026	330629	330624		
806			**06/94 - 08/02**						
1.8	(221)	07/95-08/02	LFW (XU7JP)	73	330023, 330026	330060	330109, 330122, 330147, 330188, 330588	330251	
1.9 TD	(221)	07/95-08/02	DHX (XUD9TE)	66	330023, 330026	330060, 330074	330109, 330134, 330147, 330272, 330575, 330588	330249	
	(221)	05/97-08/02	DHY (XUD9TE)	68	330023, 330026	330060, 330074	330109, 330134, 330147, 330272, 330575, 330588	330249	
2.0	(221)	06/94-08/02	RFU (XU10J2)	89	330023, 330026	330060	330109, 330122, 330147, 330188, 330576, 330588, 330624	330251	
2.0 16V	(221)	05/98-09/00	RFV (XU10J4R)	97	330026	330060, 330074	330109, 330122, 330188, 330576, 330588	330249	
	(221)	09/00-08/02	RFN (EW10J4)	100	330026	330060	330576	330681	
2.0 HDI	(221)	08/99-08/02	RHZ (DW10ATED)	80	330026	330060, 330074	330624	330249	
2.0 HDI 16V	(221)	08/99-08/02	RHW (DW10ATED4)	80	330026	330060, 330715	330624	330249, 330513	
2.0 Turbo	(221)	06/94-08/02	RGX (XU10J2TE)	108	330023, 330026	330060, 330074	330271, 330588	330249	
2.1 td 12V	(221)	06/96-08/99	P8C (XUD11BTE)	80	330023	330060, 330074	330109, 330134, 330147, 330272, 330588	330249	
807			**06/02 -**						
2.0	(E)	06/02-	RFN (EW10J4)	100	330026	330629, 330704, 330713, 330715	330624	330681	

OPS Oil Pressure Switches **BLS** Brake Light Switches **TT-RF** Temperature Transmitter and Radiator Fan Switches **RLS** Reverse Light Switches **VAR** Various

ERA S.p.A. Moncalieri (TO) Italy - tel: +39 011 6891511 - fax: +39 011 6472862 - www.eranet.it

Vehicle		Date	Engine	kW	OPS	BLS	TT-RF	RLS	VAR
2.0 16V	(E)	09/05-	RFJ (EW10A)	103	330026	330629, 330704, 330713, 330715	330624	330681	
2.0 HDi	(E)	06/02-	RHW (DW10ATED4)	79	330026	330629, 330704, 330713, 330715	330502, 330551, 330624	330513	
	(E)	11/06-	RHK (DW10UTED4)	88		330715			
2.0 HDI	(E)	06/06-	RHR (DW10BTED4)	100	330026	330629, 330715	330502, 330624	330513	
2.2	(E)	06/02-	3FZ (EW12J4)	116	330026	330629, 330704, 330713, 330715	330624	330513	
2.2 HDi	(E)	06/02-	4HX (DW12TED4/ FAP)	94	330026	330629, 330704, 330713, 330715	330502, 330624	330513	
	(E)	06/06-	4HT (DW12BTED4)	125	330026	330629, 330715	330502	330513	
3.0 V6	(E)	06/02-	XFX (ES9J4S)	150	330026	330629, 330704, 330713	330624		
BIPPER			**02/08 -**						
1.4	(AA_)	02/08-	KFV (TU3A)	54	330026	330492, 330721, 330736	330624	330513	
1.4 HDi	(AA_)	02/08-	8HS (DV4TD)	50	330026	330492, 330721, 330736	330502	330513	
BIPPER Tepee			**04/08 -**						
1.4		04/08-	KFV (TU3A)	54		330721, 330736			
1.4 HDi		04/08-	8HS (DV4TD)	50		330721, 330736			
BOXER			**03/94 -**						
1.9 D	Box (230L)	07/99-04/02	DJY (XUD9A)	50	330026	330051, 330064, 330519	330109, 330279, 330554, 330639	330249, 330513, 330518	
	Box (230L)	03/94-04/02	D8C (XUD9AU)	51	330023	330048, 330050, 330051, 330064, 330519	330109, 330134, 330279, 330554	330249, 330513, 330518	
	Bus (230P)	03/94-04/02	D8C (XUD9AU)	51	330023	330048, 330050, 330051, 330064, 330519	330109, 330134, 330279, 330554	330249, 330513, 330518	
1.9 DT 4x4	Box (230L)	03/96-09/98	XUD9TE	66	330023, 330026	330048, 330050, 330051, 330064, 330519	330109, 330279, 330554, 330575	330249, 330513, 330518	
1.9 TD	Box (230L)	07/99-04/02	XUD9TE	66	330023, 330026	330051, 330064, 330519	330109, 330279, 330554, 330575	330249, 330513, 330518	
	Bus (230P)	08/94-04/02	DHY (XUD9TE)	66	330023, 330026	330050, 330051, 330064, 330519	330109, 330279, 330554, 330575	330249, 330513, 330518	
	Flatbed / Chassis (ZCT_)	12/98-04/02	DHY (XUD9TE)	66	330023, 330026	330051, 330064, 330519	330109, 330279, 330554, 330575	330249, 330513, 330518	
	Box (230L)	03/94-04/02	D8C (XUD9UTF)	68	330023, 330026	330048, 330050, 330051, 330064, 330519	330109, 330279, 330554, 330575	330249, 330513, 330518	
	Bus (230P)	03/94-04/02	D8C (XUD9UTF)	68	330023, 330026	330048, 330050, 330051, 330064, 330519	330109, 330279, 330554, 330575	330249, 330513, 330518	
	Flatbed / Chassis (ZCT_)	07/96-04/02	D8C (XUD9UTF)	68	330023, 330026	330050, 330051, 330064, 330519	330109, 330279, 330554, 330575	330249, 330513, 330518	
1.9 TD 4x4	Bus (230P)	07/96-04/02	D8C (XUD9UTF)	68	330023, 330026	330050, 330051, 330064, 330519	330109, 330279, 330554, 330575	330249, 330513, 330518	
2.0	Box (244)	04/02-	RFL (XU10J2U)	81	330026	330081, 330517	330551	330513, 330518	
	Bus (244, Z_)	04/02-	RFL (XU10J2U)	81	330026	330081, 330517	330551	330513, 330518	

OPS Oil Pressure Switches **BLS** Brake Light Switches **TT-RF** Temperature Transmitter and Radiator Fan Switches **RLS** Reverse Light Switches **VAR** Various

Vehicle		Date	Engine	kW	OPS	BLS	TT-RF	RLS	VAR
2.0 HDI	Box (230L)	08/01-04/02	RHV (DW10UTD)	62	330026	330519	330742	330513, 330518	
	Box (244)	04/02-	RHV (DW10UTD)	62	330026	330081, 330517	330742	330513, 330518	
	Bus (244, Z_)	04/02-	RHV (DW10UTD)	62	330026	330081, 330517	330742	330513, 330518	
	Flatbed / Chassis (244)	04/02-	RHV (DW10UTD)	62	330026	330081, 330517	330742	330513, 330518	
2.0 i	Box (230L)	06/94-04/02	RFW (XU10J2)	80	330023, 330026	330048, 330050, 330051, 330064, 330519	330122, 330197, 330295, 330588	330249, 330513, 330518	
	Bus (230P)	03/94-04/02	RFW (XU10J2)	80	330023, 330026	330048, 330050, 330051, 330064, 330519	330122, 330197, 330295, 330588	330249, 330513, 330518	
	Flatbed / Chassis (ZCT_)	06/94-04/02	RFW (XU10J2)	80	330023, 330026	330048, 330050, 330051, 330064, 330519	330122, 330197, 330295, 330588	330249, 330513, 330518	
2.0 i 4x4	Bus (230P)	08/96-04/02	RFW (XU10J2)	80	330023, 330026	330048, 330050, 330051, 330064, 330519	330122, 330197, 330295, 330588	330249, 330513, 330518	
2.2 HDi	Box (244)	04/02-	4HY (DW12UTED)	74	330026	330081, 330517	330279, 330295, 330742	330513, 330518	
	Bus (244, Z_)	04/02-	4HY (DW12UTED)	74	330026	330081, 330517	330279, 330295, 330742	330513, 330518	
	Flatbed / Chassis (244)	04/02-	4HY (DW12UTED)	74	330026	330081, 330517	330279, 330295, 330742	330513, 330518	
2.2 HDi 100	Box	04/06-	4HV	74	330028	330081, 330517		330513	
	Bus	04/06-	4HV	74	330028	330081, 330517		330513	
	Flatbed / Chassis	04/06-	4HV	74	330028	330081, 330517		330513	
2.2 HDi 120	Box	04/06-	4HU	88	330028	330081, 330517		330513	
	Bus	04/06-	4HU	88	330028	330081, 330517		330513	
	Flatbed / Chassis	04/06-	4HU	88	330028	330081, 330517		330513	
2.5 D	Box (230L)	03/94-04/02	T9A (DJ5)	63	330023, 330026	330048, 330050, 330051, 330064, 330519	330122, 330134, 330279, 330556, 330575	330249, 330513, 330518	
	Bus (230P)	08/94-04/02	T9A (DJ5)	63	330023, 330026	330050, 330051, 330064, 330519	330122, 330134, 330279, 330556, 330575	330249, 330513, 330518	
	Flatbed / Chassis (ZCT_)	03/94-04/02	T9A (DJ5)	63	330023, 330026	330048, 330050, 330051, 330064, 330519	330122, 330134, 330279, 330556, 330575	330249, 330513, 330518	
2.5 D 4x4	Box (230L)	07/99-04/02	T9A (DJ5)	63	330026	330051, 330064, 330519	330122, 330134, 330279, 330556, 330575	330518	
	Bus (230P)	07/96-04/02	T9A (DJ5)	63	330023, 330026	330050, 330051, 330064, 330519	330122, 330134, 330279, 330556, 330575	330518	
	Flatbed / Chassis (ZCT_)	07/99-04/02	T9A (DJ5)	63	330026	330051, 330064, 330519	330122, 330134, 330279, 330556, 330575	330518	
2.5 TD	Box (230L)	03/94-04/02	T8A (DJ5T)	76	330023, 330026	330048, 330050, 330051, 330064, 330519	330122, 330134, 330279, 330556, 330575	330249, 330513, 330518	
	Bus (230P)	07/94-04/02	T8A (DJ5T)	76	330023, 330026	330050, 330051, 330064, 330519	330122, 330134, 330279, 330556, 330575	330249, 330513, 330518	

OPS Oil Pressure Switches **BLS** Brake Light Switches **TT-RF** Temperature Transmitter and Radiator Fan Switches **RLS** Reverse Light Switches **VAR** Various

ERA S.p.A. Moncalieri (TO) Italy - tel: +39 011 6891511 - fax: +39 011 6472862 - www.eranet.it

Vehicle		Date	Engine	kW	OPS	BLS	TT-RF	RLS	VAR
2.5 TD	Flatbed / Chassis (ZCT_)	03/94-04/02	T8A (DJ5T)	76	330023, 330026	330048, 330050, 330051, 330064, 330519	330122, 330134, 330279, 330556, 330575	330249, 330513, 330518	
2.5 TD 4x4	Bus (230P)	07/96-04/02	T8A (DJ5T)	76	330023, 330026	330050, 330051, 330064, 330519	330122, 330134, 330279, 330556, 330575	330518	
2.5 TDI	Box (230L)	01/97-04/02	THX (DJ5TED)	79	330023, 330026	330050, 330051, 330064, 330519	330279, 330556	330249, 330513, 330518	
	Bus (230P)	01/97-04/02	THX (DJ5TED)	79	330023, 330026	330050, 330051, 330064, 330519	330279, 330556	330249, 330513, 330518	
	Flatbed / Chassis (ZCT_)	01/97-04/02	THX (DJ5TED)	79	330023, 330026	330050, 330051, 330064, 330519	330279, 330556	330249, 330513, 330518	
2.5 TDI 4x4	Box (230L)	07/99-04/02	THX (DJ5TED)	79	330026	330051, 330064, 330519	330279, 330556	330518	
	Bus (230P)	01/97-04/02	THX (DJ5TED)	79	330023, 330026	330050, 330051, 330064, 330519	330279, 330556	330518	
	Flatbed / Chassis (ZCT_)	07/99-04/02	THX (DJ5TED)	79	330026	330051, 330064, 330519	330279, 330556	330518	
2.8 DTiC	Box (230L)	10/97-09/00	8140.43 (F28DT)	90		330051, 330064, 330519	330148, 330295	330249, 330513, 330518	
2.8 HDI	Box (230L)	11/00-04/02	8140.43S (F28DTCR)	94		330051, 330519	330120, 330137, 330148, 330295	330513, 330518	
2.8 HDi	Box (244)	04/02-	8140.43S (F28DTCR)	94		330081, 330517	330137, 330148, 330295	330513, 330518	
2.8 HDI	Bus (230P)	11/00-04/02	8140.43S (F28DTCR)	94		330051, 330519	330120, 330137, 330148, 330295	330513, 330518	
2.8 HDi	Bus (244, Z_)	04/02-	8140.43S (F28DTCR)	94		330081, 330517	330137, 330148, 330295	330513, 330518	
	Flatbed / Chassis (244)	04/02-	8140.43S (F28DTCR)	94		330081, 330517	330137, 330148, 330295	330513, 330518	
2.8 HDI	Flatbed / Chassis (ZCT_)	11/00-04/02	8140.43S (F28DTCR)	94		330051, 330519	330120, 330137, 330148, 330295	330513, 330518	
2.8 HDi	Box (244)	04/04-	8140.43N	107		330081, 330517	330137, 330148	330513, 330518	
	Bus (244, Z_)	04/04-	8140.43N	107		330081, 330517	330137, 330148	330513, 330518	
	Flatbed / Chassis (244)	04/04-	8140.43N	107		330081, 330517	330137, 330148	330513, 330518	
2.8 HDi 4x4	Box (244)	04/02-	8140.43S (F28DTCR)	94		330081, 330517	330137, 330148, 330295	330513, 330518	
	Bus (244, Z_)	04/02-	8140.43S (F28DTCR)	94		330081, 330517	330137, 330148, 330295	330513, 330518	
	Flatbed / Chassis (244)	04/02-	8140.43S (F28DTCR)	94		330081, 330517	330137, 330148, 330295	330513, 330518	
2.8 TD	Flatbed / Chassis (244)	12/01-03/05	8140.43 (F28DT)	90		330081, 330517	330148, 330295	330518	
3.0 D	Box	07/06-	--	115		330081, 330517	330137		
	Flatbed / Chassis	02/07-	--	115		330081, 330517	330137		
3.0 HDi 145	Box	04/10-	--	107		330517			
	Bus	04/10-	--	107		330517			
	Flatbed / Chassis	04/10-	--	107		330517			
3.0 HDi 160	Box	04/06-	F1CE0481D	116		330081, 330517	330137		
	Bus	04/06-	--	116		330081, 330517	330137		
	Flatbed / Chassis	04/06-	F1CE0481D	116		330081, 330517	330137		

OPS Oil Pressure Switches **BLS** Brake Light Switches **TT-RF** Temperature Transmitter and Radiator Fan Switches **RLS** Reverse Light Switches **VAR** Various

EXPERT 07/95 -

Vehicle		Date	Engine	kW	OPS	BLS	TT-RF	RLS	VAR
1.6	(224)	02/96-	222A2 (1580 SPI)	58		330060	330116, 330188	330251, 330681	
	Box (222)	02/96-	222A2 (1580 SPI)	58		330060	330116, 330188	330251, 330681	
	Flatbed / Chassis (223)	02/96-	222A2 (1580 SPI)	58		330060	330116, 330188	330251, 330681	
1.6 HDi 90	Box (VF3A_, VF3U_, VF3X_)	01/07-	9HU (DV6UTED4)	66	330026	330629, 330715	330502	330681	
	Flatbed / Chassis	01/07-	9HU (DV6UTED4)	66	330026	330629, 330715	330502	330681	
1.8	(224)	10/96-09/00	LFZ (XU7JP)	74	330023, 330026	330060	330109, 330122, 330188, 330588	330251, 330681	
	Box (222)	10/96-09/00	LFZ (XU7JP)	74	330023, 330026	330060	330109, 330122, 330188, 330588	330251, 330681	
1.9 D	(224)	02/96-	D9B (XUD9AU)	51	330023, 330026	330060	330109, 330134, 330272, 330588, 330624	330251, 330681	
	(224)	12/03-	WJZ (DW8)	51		330704, 330713		330681	
	Box (222)	02/96-	D9B (XUD9AU)	51	330023, 330026	330060	330109, 330134, 330272, 330588, 330624	330251, 330681	
	Flatbed / Chassis (223)	02/96-	D9B (XUD9AU)	51	330023, 330026	330060	330109, 330134, 330272, 330588, 330624	330251, 330681	
	Flatbed / Chassis (223)	06/98-11/03	WJZ (DW8)	51		330704, 330713		330681	
1.9 D 70	Box (222)	12/98-	WJY (DW8B), WJZ (DW8)	51	330026	330060, 330704, 330713	330155, 330272	330251, 330681	
1.9 TD	(224)	02/96-	DHX (XUD9TE)	66	330023, 330026	330060, 330074, 330704, 330713	330109, 330134, 330272, 330575, 330588	330249, 330513	
	Box (222)	02/96-	DHX (XUD9TE)	66	330023, 330026	330060, 330074, 330704, 330713	330109, 330134, 330272, 330575, 330588	330249, 330513	
	Flatbed / Chassis (223)	02/96-	DHX (XUD9TE)	66	330023, 330026	330060, 330074, 330704, 330713	330109, 330134, 330272, 330575, 330588	330249, 330513	
	(224)	02/96-	D8B (XUD9TE)	68	330023, 330026	330060, 330074, 330704, 330713	330109, 330134, 330272, 330575, 330588	330249, 330513	
	Box (222)	02/96-	D8B (XUD9TE)	68	330023, 330026	330060, 330074, 330704, 330713	330109, 330134, 330272, 330575, 330588	330249, 330513	
	Flatbed / Chassis (223)	02/96-	D8B (XUD9TE)	68	330023, 330026	330060, 330074, 330704, 330713	330109, 330134, 330272, 330575, 330588	330249, 330513	
2.0	(224)	07/00-	RFN (EW10J4)	100	330026	330060, 330704, 330713	330624	330681	
	Box (222)	09/02-	RFN (EW10J4)	100	330026	330060, 330704, 330713	330624	330681	
2.0 16V	Box (VF3A_, VF3U_, VF3X_)	01/07-	RFJ (EW10A)	103	330026	330629, 330715		330681	
2.0 HDi	(224)	10/00-11/03	RHX (DW10BTED)	69		330704, 330713, 330715			
2.0 HDI	Box (222)	07/00-	RHX (DW10BTED)	69	330026	330060, 330074, 330704, 330713, 330715	330551	330513	
2.0 HDi	Flatbed / Chassis (223)	10/00-10/06	RHX (DW10BTED)	69		330704, 330713, 330715			

OPS Oil Pressure Switches **BLS** Brake Light Switches **TT-RF** Temperature Transmitter and Radiator Fan Switches **RLS** Reverse Light Switches **VAR** Various

ERA S.p.A. Moncalieri (TO) Italy - tel: +39 011 6891511 - fax: +39 011 6472862 - www.eranet.it

Vehicle		Date	Engine	kW	OPS	BLS	TT-RF	RLS	VAR
2.0 HDI	(224)	07/00-	RHZ (DW10ATED)	80	330026	330060, 330704, 330713, 330715	330551, 330624	330513	
	(224)	07/00-	RHW (DW10ATED4)	80	330026	330060, 330704, 330713, 330715	330502, 330551, 330624	330513	
	Box (222)	07/00-	RHZ (DW10ATED)	80	330026	330060, 330704, 330713, 330715	330551, 330624	330513	
	Box (222)	07/00-	RHW (DW10ATED4)	80	330026	330060, 330704, 330713, 330715	330502, 330551, 330624	330513	
2.0 HDi 120	Box (VF3A_, VF3U_, VF3X_)	01/07-	RHK (DW10UTED4)	88	330026	330629, 330715	330502	330513	
	Flatbed / Chassis	01/07-	RHK (DW10UTED4)	88	330026	330629, 330715	330502	330513	
2.0 HDi 140	Box (VF3A_, VF3U_, VF3X_)	01/07-	RHR (DW10BTED4)	100	330026	330629, 330715	330502	330513	
	Flatbed / Chassis	01/07-	RHR (DW10BTED4)	100	330026	330629, 330715	330502	330513	
2.0 HDi 165	Box (VF3A_, VF3U_, VF3X_)	09/09-	RHH (DW10CTED4)	120		330715			
EXPERT Tepee			**01/07 -**						
1.6 HDi 90	(VF3V_)	01/07-	9HU (DV6UTED4)	66	330026	330629, 330715	330502	330681	
2.0 16V	(VF3V_)	01/07-	RFJ (EW10A)	103	330026	330629, 330715		330681	
2.0 HDi 120	(VF3V_)	01/07-	RHK (DW10UTED4)	88	330026	330629, 330715	330502	330513	
2.0 HDi 140	(VF3V_)	01/07-	RHR (DW10BTED4)	100	330026	330629, 330715	330502	330513	
2.0 HDi 165	(VF3V_)	09/09-	RHH (DW10CTED4)	120		330715			
J5			**09/81 - 03/94**						
2.5 D	Bus (280P)	09/81-09/90	CRD93 (U25/661)	54			330086		
	Bus (290P)	10/90-	CRD93 (U25/661)	54			330086		
	Flatbed / Chassis (280L)	09/81-09/90	CRD93 (U25/661)	54			330086		
	Flatbed / Chassis (290L)	10/90-	CRD93 (U25/661)	54			330086		
2.5 D 4x4	Box (290L)	10/90-	CRD93 (U25/661)	54			330086		
	Bus (290P)	10/90-	CRD93 (U25/661)	54			330086		
	Flatbed / Chassis (290L)	10/90-	CRD93 (U25/661)	54			330086		
2.5 TD	Bus (290P)	10/90-	CRD93LS (U25/673)	70			330086		
	Flatbed / Chassis (290L)	10/90-	CRD93LS (U25/673)	70			330086		
2.5 TD 4x4	Box (290L)	10/90-	CRD93LS (U25/673)	70			330086		
	Bus (290P)	10/90-	CRD93LS (U25/673)	70			330086		
	Flatbed / Chassis (290L)	10/90-	CRD93LS (U25/673)	70			330086		
PARTNER			**04/96 -**						
1.1	Box (5)	06/96-	HDZ (TU1M)	44	330010	330060, 330704	330122, 330154, 330188, 330588	330249, 330513	
	Combispace (5F)	06/96-	HDZ (TU1M), HFX (TU1JP)	44	330010, 330026	330060, 330704, 330716	330122, 330154, 330188, 330551, 330588, 330624, 330637	330249, 330513	
1.4	Box (5)	06/96-	KFX (TU3JP)	55	330010	330060, 330704	330122, 330154, 330188, 330588	330249, 330513	

OPS Oil Pressure Switches **BLS** Brake Light Switches **TT-RF** Temperature Transmitter and Radiator Fan Switches **RLS** Reverse Light Switches **VAR** Various

Vehicle		Date	Engine	kW	OPS	BLS	TT-RF	RLS	VAR
1.4	Combispace (5F)	06/96-	KFW (TU3JP), KFX (TU3JP)	55	330010, 330026	330060, 330704, 330718, 330722	330122, 330154, 330188, 330551, 330588, 330637	330249, 330513	
1.4 BiFuel	Box (5)	04/03-	KFW (TU3JP)	55	330026	330718, 330722	330551, 330637	330513	
1.6	Box	04/08-	NFR (TU5JP4B)	66	330026	330629, 330722	330552, 330637	330681	
	Box	04/08-	NFU (TU5JP4)	80	330026	330629, 330722	330552, 330637	330681	
	Box (5)	09/00-10/02	NFU (TU5JP4)	80	330026	330060, 330430, 330704, 330716, 330718, 330722	330551, 330552, 330637	330681	
1.6 16V	Combispace (5F)	07/01-	NFU (TU5JP4)	80	330026	330060, 330430, 330704, 330718, 330722	330551, 330552, 330624, 330637	330681	
1.6 HDi	Box	04/08-	9HT (DV6BTED4)	55	330026	330629, 330722	330502	330681	
	Box	04/08-	9HX (DV6ATED4)	66	330026	330629, 330722	330502	330681	
	Box	04/08-	9HZ (DV6TED4)	80	330026	330629, 330722	330502	330681	
1.6 HDi 75	Box (5)	02/06-	9HW (DV6BTED4)	55	330026	330718, 330722	330502	330681	
	Combispace (5F)	02/06-	9HW (DV6BTED4)	55	330026	330718, 330722	330502	330681	
1.6 HDi 90	Box (5)	02/06-	9HX (DV6ATED4)	66	330026	330718, 330722	330502	330681	
	Combispace (5F)	02/06-	9HX (DV6ATED4)	66	330026	330718, 330722	330502	330681	
1.8	Box (5)	03/97-08/00	LFX (XU7JB)	66	330023, 330026	330060, 330704	330109, 330122, 330188, 330588	330251, 330681	
	Combispace (5F)	05/97-	LFX (XU7JB)	66	330023, 330026	330060, 330704	330109, 330122, 330188, 330588	330251, 330681	
1.8 D	Box (5)	06/96-	A9A (XUD7)	43	330023, 330026	330060, 330704	330109, 330134, 330194, 330271, 330588	330251, 330681	
	Box (5)	11/96-02/98	A9A (XUD7)	44	330023, 330026	330060, 330704	330109, 330134, 330194, 330271, 330588	330251, 330681	
1.9 D	Box (5)	05/96-12/98	DJY (XUD9A)	50	330023, 330026	330060, 330704	330109, 330134, 330194, 330271, 330588	330251, 330681	
	Combispace (5F)	06/96-	DJY (XUD9A)	50	330023, 330026	330060, 330704	330109, 330194, 330271, 330588, 330639	330251, 330681	
	Box (5)	06/96-	DJY (XUD9A)	51	330023, 330026	330060, 330704	330109, 330194, 330271, 330588, 330639	330251, 330681	
	Box (5)	06/96-	WJY (DW8B), WJZ (DW8)	51	330026	330060, 330704, 330716	330155, 330194, 330624	330251, 330681	
	Combispace (5F)	12/98-	WJY (DW8B), WJZ (DW8)	51	330026	330060, 330704, 330716	330155, 330194, 330624	330251, 330681	
	Combispace (5F)	05/96-12/98	XUD9	51	330023, 330026	330060, 330704	330109, 330134, 330194, 330271, 330588	330251, 330681	
1.9 D 4x4	Box (5)	04/04-	WJY (DW8B)	51	330026	330716	330624	330681	
	Combispace (5F)	04/04-08/05	WJY (DW8B)	51	330026	330716		330681	
2.0 HDi	Box (5)	04/00-	RHY (DW10TD)	66	330026	330060, 330430, 330704, 330718, 330722	330194, 330502, 330742	330251, 330681	
2.0 HDI	Combispace (5F)	02/00-	RHY (DW10TD)	66	330026	330060, 330430, 330704, 330718, 330722	330194, 330502, 330742	330251, 330681	

OPS Oil Pressure Switches **BLS** Brake Light Switches **TT-RF** Temperature Transmitter and Radiator Fan Switches **RLS** Reverse Light Switches **VAR** Various

ERA S.p.A. Moncalieri (TO) Italy - tel: +39 011 6891511 - fax: +39 011 6472862 - www.eranet.it

Vehicle		Date	Engine	kW	OPS	BLS	TT-RF	RLS	VAR
2.0 HDi 4x4	Box (5)	04/04-	RHY (DW10TD)	66	330026	330430, 330718, 330722	330502	330681	
	Combispace (5F)	04/04-08/05	RHY (DW10TD)	66	330026	330430, 330718, 330722	330502	330681	
Electric	Box (5)	04/96-12/02	--	25		330716			
PARTNER Tepee			**04/08 -**						
1.6		04/08-	NFR (TU5JP4B)	66	330026	330629, 330722	330552, 330637	330681	
		08/10-	--	72		330722		330681	
		04/08-	NFU (TU5JP4)	80	330026	330629, 330722	330552, 330637	330681	
		04/10-	5FS (EP6C)	88		330722		330681	
1.6 HDi		04/08-	9HT (DV6BTED4)	55	330026	330629, 330722	330502	330681	
		04/08-	9HX (DV6ATED4)	66	330026	330629, 330722	330502	330681	
		04/08-	9HZ (DV6TED4)	80	330026	330629, 330722	330502	330681	
		08/10-	--	82		330722		330681	
RCZ			**03/10 -**						
1.6 16V		03/10-	EP6CDT	115		330722		330681	
		06/10-	EP6CDTX	147		330722		330681	
2.0 HDi		03/10-	RHH (DW10CTED4)	120		330722			
PIAGGIO									
PORTER			**02/93 -**						
1.0	Flatbed / Chassis	07/94-	CB42	35			330100		
PORSCHE									
911			**01/63 -**						
2.0 L		01/63-08/67	901.01, 901.05	96	330358	330414			
	Targa	11/64-11/68	901.01, 901.05	96		330414			
		08/67-11/68	--	110	330358	330414			
	Targa	08/67-11/68	--	110		330414			
2.0 S	Targa	07/66-11/68	901.02	118		330414			
	Targa	07/66-02/72	901.10	125		330414			
2.0 T		08/68-02/72	901.03, 901.13	81	330358				
	Targa	06/67-02/72	901.03, 901.13	81		330414			
2.2 T		01/70-12/72	911.06	92	330358				
2.3 E		08/71-12/73	911.52, 911.62	121	330358				
2.3 S		08/71-01/76	911.53, 911.63	140	330358				
2.3 T		01/72-12/73	--	96	330358				
		08/71-12/73	--	103	330358				
2.7		09/73-08/75	--	110	330358				
		09/75-06/77	--	121	330358				
2.7 S Carrera		08/73-01/76	911.42, 911.47, 911.93, 911.98	129	330358				
2.7 SC Carrera RS		08/72-01/79	911.83	154	330358				

OPS Oil Pressure Switches **BLS** Brake Light Switches **TT-RF** Temperature Transmitter and Radiator Fan Switches **RLS** Reverse Light Switches **VAR** Various

Vehicle		Date	Engine	kW	OPS	BLS	TT-RF	RLS	VAR
3.0 SC		08/82-07/83	--	150	330358				
3.0 SC Carrera		07/77-06/80	930.03/13	132	330358				
		09/79-06/80	930.09	138	330358				
		09/75-06/77	930.02	147	330358				
		03/74-10/83	--	154	330358				
3.2		08/86-08/89	930.25	160	330358				
3.2 SC Carrera		02/84-06/87	930.21	152	330358				
		08/83-08/89	930.20	170	330358				
3.3 Turbo	(964)	08/90-09/93	M 30.69	235			330116		
3.3 Turbo S	(964)	06/91-12/92	M 30.69S	261			330116		
3.4 Carrera	(996)	09/97-09/01	M 96.01, M 96.04	221		330434		330244	
	Convertible (996)	02/98-09/01	M 96.01, M 96.04	221		330434		330244	
	(996)	05/01-08/05	--	235		330434		330244	
	Convertible (996)	05/01-08/05	--	235		330434		330244	
3.4 Carrera 4	(996)	09/97-09/01	M 96.01, M 96.04	221		330434		330244	
	Convertible (996)	02/98-09/01	M 96.02, M 96.04	221		330434		330244	
	(996)	05/01-08/05	--	235		330434		330244	
	Convertible (996)	05/01-08/05	--	235		330434		330244	
3.6	Targa (996)	12/01-08/05	M 96.03	235		330434		330244	
3.6 Carrera	(996)	10/01-08/05	M 96.03	235		330434		330244	
	Convertible (996)	10/01-08/05	M 96.03	235		330434		330244	
	(997)	07/04-	M 96.05	239		330434			
	Convertible (997)	04/05-	M 96.05	239		330434			
3.6 Carrera 4	(996)	10/01-08/05	M 96.03	235		330434		330244	
	Convertible (996)	10/01-08/05	M 96.03	235		330434		330244	
	(997)	07/04-	M 96.05	239		330434			
	Convertible (997)	04/05-	M 96.05	239		330434			
3.6 Carrera 4S	(996)	02/03-08/05	M 96.03	254		330434		330244	
	Convertible (996)	06/02-08/05	M 96.03	254		330434		330244	
3.6 Carrera S	(996)	02/03-08/05	M 96.03	254		330434		330244	
	Convertible (996)	06/02-08/05	M 96.03	254		330434		330244	
3.6 GT 3	(997)	03/06-	M 97.76	305		330434			
3.6 GT2	(996)	04/01-08/05	M 96.70	340		330434			
	(996)	10/03-08/05	M 96.70	355		330434			
3.6 GT3	(996)	03/99-08/05	M 96.76	265		330434			
	(996)	03/03-08/05	M 96.79	280		330434			
3.6 S	(996)	08/04-08/05	M 96.70	331		330434			
	Convertible (996)	08/04-08/05	M 96.70	331		330434			
3.6 Turbo	(964)	01/93-09/93	M 64.50	265			330116		
	(997)	03/06-	M 97.70	353		330434			

OPS Oil Pressure Switches **BLS** Brake Light Switches **TT-RF** Temperature Transmitter and Radiator Fan Switches **RLS** Reverse Light Switches **VAR** Various

ERA S.p.A. Moncalieri (TO) Italy - tel: +39 011 6891511 - fax: +39 011 6472862 - www.eranet.it

Vehicle		Date	Engine	kW	OPS	BLS	TT-RF	RLS	VAR
3.6 Turbo	Convertible (997)	09/07-	M 97.70	353		330434			
3.6 Turbo 4	(996)	06/00-08/05	M 96.70	309		330434			
	Convertible (996)	10/03-08/05	M 96.70	309		330434			
3.6 Turbo 4S	(996)	02/03-08/05	M 96.70	331		330434			
	Convertible (996)	10/03-08/05	M 96.70	331		330434			
3.8 Carrera 4S	(997)	07/04-	M 97.01	261		330434			
	Convertible (997)	04/05-	M 97.01	261		330434			
	(997)	08/05-	M 97.01S	280		330434			
	Convertible (997)	08/05-	M 97.01S	280		330434			
3.8 Carrera S	(997)	07/04-	M 97.01	261		330434			
	Convertible (997)	04/05-	M 97.01	261		330434			
	(997)	08/05-	M 97.01S	280		330434			
	Convertible (997)	08/05-	M 97.01S	280		330434			
912			**01/65 - 02/70**						
1.6		01/65-12/69	--	66		330414			
	Targa	03/65-02/70	--	66		330414			
914			**01/69 - 02/76**						
/6 2.0		11/69-12/73	901.36, 901.37	81	330358				
924			**11/75 - 07/88**						
2.0 Turbo		06/80-10/86	M 31.03	130			330268	330234	
2.5 S		09/85-07/87	M 44.07, M 44.08	110			330268	330234	
928			**09/77 - 11/95**						
4.6 S		09/79-07/83	M 28.11, M 28.12	221			330268		
5.4 GTS		08/91-11/95	M 28.49, M 28.50	257			330133, 330189		
968			**06/91 - 11/95**						
3.0		06/91-11/95	M 44.43, M 44.44	176			330116	330249	
	Convertible	06/91-11/95	M 44.43, M 44.44	176			330116	330249	
BOXSTER			**09/96 -**						
2.5	(986)	09/96-08/99	M 96.20	150	330011	330434		330753	
2.7	(986)	08/99-07/02	M 96.22	162	330011	330434		330753	
	(986)	07/02-	M 96.23	168	330011	330434		330753	
	(987)	11/04-	M 96.25	176	330011	330434	330546	330753	
	(987)	07/06-	M 97.20	180	330011	330434	330546	330753	
S 3,2	(986)	07/02-	M 96.24	191	330011	330434		330753	
S 3.2	(986)	08/99-07/02	M 96.21	185	330011	330434		330753	
	(986)	01/04-	M 96.24	196	330011	330434		330753	
	(987)	11/04-	M 96.26	206	330011	330434	330546	330753	

OPS Oil Pressure Switches **BLS** Brake Light Switches **TT-RF** Temperature Transmitter and Radiator Fan Switches **RLS** Reverse Light Switches **VAR** Various

Vehicle		Date	Engine	kW	OPS	BLS	TT-RF	RLS	VAR
S 3.4	(987)	07/06-	M 97.21	217	330011	330434	330546	330753	
CAYENNE			**09/02 -**						
3.2	(955)	08/03-	M02.2Y	177	330324		330546		
	(955)	10/03-	M02.2Y	184	330324		330546		
S 4.5	(955)	09/02-	M 48.00	250	330325				
Turbo 4.5	(955)	09/02-	M 48.50	331	330325				
Turbo S 4.5	(955)	01/04-	M 48.50S	368	330325				
	(955)	03/06-	--	383	330325				
CAYMAN			**11/05 -**						
2.7	(987)	07/06-	M 97.20	180	330011	330434	330546		
S 3.4	(987)	11/05-	M 97.21	217	330011	330434	330546		
PUCH									
G-MODELL			**03/79 -**						
230 GE	(W 460)	04/82-08/92	M 102.981, M 102.987	92		330053	330104		
	(W 461)	06/93-	M 102.996	92		330053	330104		
	(W 463)	06/90-06/93	M 102.989	93		330053	330104, 330149, 330334	330246	
240 GD	(W 460)	03/79-08/87	OM 616.936	53		330053	330104, 330118		
250 GD	(W 460)	10/87-12/92	OM 602.930	62		330053	330104, 330118	330246	
280 GE	(W 460)	08/84-08/89	M 110.994	110		330053	330104		
290 GD/G 290 D	(W 461)	04/92-	OM 602.942	70		330053	330104, 330118		
300 GD	(W 460)	12/79-12/91	OM 617.931	65		330053	330104, 330118		
	(W 463)	09/89-	OM 603.931	83		330053		330246	
300 GE	(W 463)	06/90-	M 103.987	125		330053	330104, 330190, 330334	330246	
350 G Turbo D	(W 463)	09/91-	OM 603.972	100		330053			
G 290 TD	(W 461)	07/97-	OM 602.983	88		330058	330104		
G 300 TD	(W 463)	08/96-	OM 606.964	130	330012	330058			
G 320	(W 463)	09/94-12/97	M 104.996	155	330012	330058	330104, 330149, 330333		
G 36 AMG	(W 463)	01/95-	--	200	330012	330058	330104, 330149, 330333		
G 500	(W 463)	04/98-	M 113.962	218		330058	330647	330532	
G 55 AMG	(W 463)	04/99-	M 113.982	260			330647	330532	
RENAULT									
11			**03/83 - 07/89**						
1.1	(B/C37_)	03/83-06/86	C1E 715, C1E 720	35	330003	330037	330167	330236	
1.2	(B/C37_)	10/84-12/88	C1G 700, C1G 710	40		330037	330084, 330167	330236	
	Box (S37_)	10/84-12/88	C1G 700, C1G 710	40		330037	330084, 330167	330236	

OPS Oil Pressure Switches **BLS** Brake Light Switches **TT-RF** Temperature Transmitter and Radiator Fan Switches **RLS** Reverse Light Switches **VAR** Various

ERA S.p.A. Moncalieri (TO) Italy - tel: +39 011 6891511 - fax: +39 011 6472862 - www.eranet.it

Vehicle		Date	Engine	kW	OPS	BLS	TT-RF	RLS	VAR
1.4	(B/C37_)	03/83-12/88	C2J 720, C2J 766, C2J 767, C2J 768	49	330003	330037	330084, 330167	330236	
1.6 D	(B/C37_)	08/83-12/88	F8M 700, F8M 720, F8M 730	40		330037	330084, 330167	330236	
	Box (S37_)	08/83-12/88	F8M 700, F8M 720, F8M 730	40		330037	330084, 330167	330236	
14			**05/76 - 12/83**						
1.4	(121_)	09/79-06/83	150	52		330037	330167, 330531	330236	
18			**04/78 - 11/93**						
	(134_)	04/78-07/86	847 720, 847 722	47	330003	330035	330084, 330167		
	Box	05/79-07/86	847 720, 847 722	47	330003	330035	330084, 330167		
1.6 TS	(134_)	05/82-07/86	A6M 725, A6M 726	71	330003	330035	330084, 330167		
2.0	(134_)	05/82-07/86	J6R 716	77	330003	330035	330084, 330167		
19			**01/88 - 02/97**						
1.2	I (B/C53_)	01/88-12/92	C1G 730	40	330018, 330340	330055, 330067	330146, 330181	330248	
	I Box (S53_)	01/88-12/92	C1G 730	40	330018, 330340	330055, 330067	330146, 330181	330248	
	I Chamade (L53_)	01/88-12/92	C1G 730	40	330018, 330340	330055, 330067	330146, 330181	330248	
	II (B/C53_)	05/92-09/94	E7F 730	44	330018, 330340	330055, 330067	330132, 330146, 330181	330248	
	II Chamade (L53_)	05/92-09/94	E7F 730	44	330018, 330340	330055, 330067	330132, 330146, 330181	330248	
1.4	I (B/C53_)	01/89-04/92	C3J 710	43	330018, 330340	330055, 330067	330146, 330181	330248	
	I (B/C53_)	01/89-12/89	C2J 772	43	330018, 330340	330055, 330067	330146, 330181	330248	
	I Chamade (L53_)	07/88-04/92	C2J 772, C3J 710	43	330018, 330340	330055, 330067	330146, 330181	330248	
	II (B/C53_)	04/92-12/95	C3J 710	43	330018, 330340	330055, 330067	330181	330248	
	II Chamade (L53_)	04/92-12/95	C3J 710	43	330018, 330340	330055, 330067	330181	330248	
	I (B/C53_)	09/90-04/92	E7J 700	55	330018, 330340	330055, 330067	330132, 330146, 330181, 330466	330248	
	I Chamade (L53_)	09/90-04/92	E7J 700	55	330018, 330340	330055, 330067	330132, 330146, 330181, 330466	330248	
	II (B/C53_)	01/92-12/95	E7J 742	55	330018, 330340	330055, 330067	330132, 330146, 330181	330248	
	II Chamade (L53_)	11/93-12/95	E7J 742	55	330018, 330340	330055, 330067	330132, 330146, 330181	330248	
	I Chamade (L53_)	07/88-08/90	E6J 700, E6J 701	57	330018, 330340	330055, 330067	330146, 330181, 330466	330248	
	I (B/C53_)	01/88-12/92	E6J 700, E6J 701	59	330018, 330340	330055, 330067	330146, 330181, 330466	330248	
	I Box (S53_)	01/88-12/92	E6J 700	59	330018, 330340	330055, 330067	330146, 330181, 330466	330248	
	II (B/C53_)	01/92-12/95	E6J 700	59	330018, 330340	330055, 330067	330132, 330146, 330181	330248	
	II Chamade (L53_)	10/94-11/95	E7J 706	59	330018, 330340	330055, 330067	330132, 330146, 330181	330248	
1.7	I (B/C53_)	09/88-04/92	F3N 740, F3N 741	54	330021, 330340	330055, 330067	330181, 330466	330248	

OPS Oil Pressure Switches **BLS** Brake Light Switches **TT-RF** Temperature Transmitter and Radiator Fan Switches **RLS** Reverse Light Switches **VAR** Various

Vehicle		Date	Engine	kW	OPS	BLS	TT-RF	RLS	VAR
	I Chamade (L53_)	10/89-04/92	F3N 740, F3N 741	54	330021, 330340	330055, 330067	330181, 330466	330248	
	II (B/C53_)	04/92-12/95	F3N 740, F3N 741	54	330021, 330340	330055, 330067	330181, 330313	330248	
	II Chamade (L53_)	04/92-12/95	F3N 740, F3N 741	54	330021, 330340	330055, 330067	330181, 330313	330248	
	I (B/C53_)	09/88-04/92	F3N 742, F3N 743	66	330021, 330340	330055, 330067	330132, 330181, 330466	330248	
	I Chamade (L53_)	07/88-04/92	F3N 742, F3N 743	66	330021, 330340	330055, 330067	330132, 330181, 330466	330248	
	II (B/C53_)	04/92-12/95	F3N 743	66	330021, 330340	330055, 330067	330181, 330313, 330651	330248	
	II Cabriolet (D53_, 853_)	04/92-09/93	F3N 742, F3N 743	66	330021, 330340	330055, 330067	330132, 330181, 330313, 330651	330248	
	II Chamade (L53_)	04/92-12/95	F3N 742, F3N 743	66	330021, 330340	330055, 330067	330132, 330181, 330313, 330651	330248	
	I Chamade (L53_)	09/88-12/92	F2N 720, F2N 721	68	330021, 330340	330055, 330067	330181, 330313, 330466	330248	
	II Chamade (L53_)	01/93-08/95	F2N 720, F2N 721	68	330021, 330340	330055, 330067	330181, 330313	330248	
	I Cabriolet (D53_)	07/91-04/92	F3N 742, F3N 743	70	330021, 330340	330055, 330067	330132, 330181, 330466	330248	
	I (B/C53_)	06/89-04/92	F3N 746	79	330021, 330340	330055, 330067	330181, 330466, 330651	330248	
	I Chamade (L53_)	08/88-12/92	F3N 746	79	330021, 330340	330055, 330067	330181, 330466, 330651	330248	
	II (B/C53_)	05/92-09/94	F3N 746	79			330651		
1.8	II (B/C53_)	04/92-12/95	F3P 706, F3P 707, F3P 708, F3P 760	65	330021, 330340	330055, 330067	330132, 330181, 330313	330248	
	II Cabriolet (D53_, 853_)	04/92-06/96	F3P 704, F3P 705, F3P 706, F3P 707, F3P 708, F3P 760	65	330021, 330340	330055, 330067	330132, 330181, 330313	330248	
	II Chamade (L53_)	04/92-12/95	F3P 704, F3P 705, F3P 706, F3P 707, F3P 708, F3P 760	65	330021, 330340	330055, 330067	330132, 330181, 330313	330248	
	II (B/C53_)	04/92-12/95	F3P 706, F3P 760	66	330021, 330340	330055, 330067	330132, 330181, 330313	330248	
	II Cabriolet (D53_, 853_)	09/93-06/96	F3P 706, F3P 760	66	330021, 330340	330055, 330067	330132, 330181, 330313	330248	
	II Chamade (L53_)	04/92-12/95	F3P 706, F3P 760	66	330021, 330340	330055, 330067	330132, 330181, 330313	330248	
	II (B/C53_)	05/94-12/95	F3P 682, F3P 765	79	330021, 330340	330055, 330067	330132, 330181, 330313	330248	
	II Cabriolet (D53_, 853_)	07/94-06/96	F3P 682, F3P 764, F3P 765	79	330021, 330340	330055, 330067	330132, 330181, 330313	330248	
	II Chamade (L53_)	05/94-12/95	F3P 682	79	330021, 330340	330055, 330067	330132, 330181, 330313	330248	
	II (B/C53_)	04/92-05/94	F3P 700	81	330021, 330340	330055, 330067	330132, 330181, 330313	330248	
	II Chamade (L53_)	04/92-05/94	F3P 700	81	330021, 330340	330055, 330067	330132, 330181, 330313	330248	
1.8 16V	I (B/C53_)	06/89-04/92	F7P 704	99	330021, 330340	330055, 330067	330132, 330181, 330466	330248	

OPS Oil Pressure Switches **BLS** Brake Light Switches **TT-RF** Temperature Transmitter and Radiator Fan Switches **RLS** Reverse Light Switches **VAR** Various

ERA S.p.A. Moncalieri (TO) Italy - tel: +39 011 6891511 - fax: +39 011 6472862 - www.eranet.it

Vehicle		Date	Engine	kW	OPS	BLS	TT-RF	RLS	VAR
1.8 16V	I Chamade (L53_)	10/89-04/92	F7P 704	99	330021, 330340	330055, 330067	330132, 330181, 330466	330248	
	II (B/C53_)	04/92-12/95	F7P 704	99	330021, 330340	330055, 330067	330132, 330181, 330466	330248	
	II Cabriolet (D53_, 853_)	04/92-06/96	F7P 704	99	330021, 330340	330055, 330067	330132, 330181, 330466	330248	
	II Chamade (L53_)	04/92-12/95	F7P 704	99	330021, 330340	330055, 330067	330132, 330181, 330466	330248	
1.9 D	I (B/C53_)	09/88-04/92	F8Q 706, F8Q 742	47	330021, 330340	330055, 330067, 330070	330181, 330278, 330466	330248	
	I Chamade (L53_)	10/89-04/92	F8Q 706, F8Q 742	47	330021, 330340	330055, 330067, 330070	330181, 330278, 330466	330248	
	II (B/C53_)	04/92-12/95	F8Q 742	47	330021, 330340	330055, 330067, 330070	330146, 330181	330248	
	II Chamade (L53_)	04/92-12/95	F8Q 742	47	330021, 330340	330055, 330067, 330070	330146, 330181	330248	
	I Box (S53_)	01/88-12/92	F8Q 706, F8Q 742	48	330021, 330340	330055, 330067, 330070	330146, 330181, 330278, 330466	330248	
	II Box (S53_)	03/92-12/95	F8Q 706, F8Q 742	48	330021, 330340	330055, 330067, 330070	330146, 330181, 330278	330248	
1.9 DT	I (B/C53_)	09/90-04/92	F8Q 740	66	330021, 330340	330055, 330067, 330070	330132, 330146, 330181, 330278	330248	
	I Chamade (L53_)	09/90-04/92	F8Q 740	66	330021, 330340	330055, 330067, 330070	330132, 330146, 330181, 330278	330248	
1.9 dT	II (B/C53_)	04/92-12/95	F8Q 744	66	330021, 330340	330055, 330067, 330070	330146, 330181	330248	
	II Chamade (L53_)	04/92-12/95	F8Q 744	66	330021, 330340	330055, 330067, 330070	330146, 330181	330248	
	II Box (S53_)	03/92-12/95	F8Q 740	68	330021, 330340	330055, 330067, 330070	330132, 330146, 330181, 330278	330248	
1.9 TD	I Chamade (L53_)	09/90-04/92	F8Q 740	68	330021, 330340	330055, 330067, 330070	330132, 330146, 330181, 330278	330248	
20			**10/75 - 12/83**						
2.0	(127_)	10/80-12/83	829 702, 829 703	76	330003	330035	330084, 330169	330237	
	(127_)	10/77-10/80	829 700, 829 701	80	330003	330035	330084, 330169	330237	
21			**03/86 - 08/94**						
1.4	(B48_)	09/89-05/93	C2J 770	51	330018, 330340	330037, 330067	330181, 330313, 330466	330248	
	Saloon (L48_)	06/88-10/93	C2J 770	51	330018, 330340	330037	330181, 330313, 330466	330248	
1.7	(B48_)	09/89-10/92	F3N 726	54	330021, 330340	330037, 330067	330181, 330313, 330466	330248	
	Estate (K48_)	05/88-06/93	F3N 726	54	330021, 330340	330037	330181, 330313, 330466	330236, 330248	
	Estate (K48_)	06/86-12/89	F2N 750	54	330018, 330340	330037	330181	330236, 330248	
	Saloon (L48_)	07/86-02/94	F2N 750, F3N 726	54	330018, 330021, 330340	330037, 330067	330181, 330313, 330466	330248	
	Estate (K48_)	06/86-03/93	F2N 712	55	330018, 330340	330037	330181	330236, 330248	
	Saloon (L48_)	03/86-12/87	F2N 712	55	330018, 330340	330037	330181	330236, 330248	
	Estate (K48_)	06/87-04/89	F2N 752	64	330018, 330340	330037	330181, 330466	330248	
	Saloon (L48_)	06/87-04/89	F2N 752	64	330018, 330340	330037	330181, 330466	330248	

OPS Oil Pressure Switches **BLS** Brake Light Switches **TT-RF** Temperature Transmitter and Radiator Fan Switches **RLS** Reverse Light Switches **VAR** Various

Vehicle		Date	Engine	kW	OPS	BLS	TT-RF	RLS	VAR
1.7	Box (S48_)	06/86-04/95	F2N 710	65	330018, 330340	330037	330169, 330181, 330209, 330214, 330313, 330466	330236, 330248	
	Estate (K48_)	10/86-12/88	F2N 710	65	330018, 330340	330037	330169, 330209, 330214, 330313, 330466	330236, 330248	
	Saloon (L48_)	03/86-03/93	F2N 710	65	330018, 330340	330037	330169, 330181, 330209, 330214, 330313, 330466	330236, 330248	
	(B48_)	09/89-06/94	F3N 722, F3N 723	66	330021, 330340	330037, 330067	330132, 330181, 330214, 330313, 330466	330248	
	Estate (K48_)	10/89-12/93	F3N 722, F3N 723	66	330021, 330340	330037	330132, 330181, 330214, 330313, 330466	330248	
	Saloon (L48_)	09/89-02/94	F3N 722, F3N 723	66	330021, 330340	330037	330132, 330181, 330214, 330313, 330466	330248	
	Estate (K48_)	06/86-12/89	F3N 722, F3N 723	69	330021, 330340	330037	330132, 330181, 330209, 330214, 330466	330236, 330248	
	Saloon (L48_)	03/86-02/94	F3N 722, F3N 723	69	330021, 330340	330037	330132, 330181, 330214, 330313, 330466	330236, 330248	
1.9 D	(B48_)	09/89-10/93	F8Q 710	47	330021, 330340	330037, 330067	330181, 330313, 330466	330248	
	Saloon (L48_)	08/89-10/93	F8Q 710	47	330017, 330340	330037	330181, 330313, 330466	330236, 330248	
2.0	Saloon (L48_)	03/86-10/93	J6R 758, J6R 759, J6R 792, J6R 793	75	330018, 330340	330037	330181, 330209, 330214, 330536	330248, 330253	
	Estate (K48_)	06/86-12/88	J7R 750, J7R 751	85	330017, 330018, 330340	330037, 330067	330132, 330181, 330209, 330536	330237, 330248, 330253	
	Saloon (L48_)	03/86-12/88	J7R 750, J7R 751	85	330017, 330018, 330340	330055	330132, 330169, 330181, 330209, 330536	330237, 330248, 330253	
	(B48_)	09/89-12/93	J7R 746, J7R 747	88	330017, 330018, 330340	330037, 330067	330181, 330536	330248, 330253	
	Estate (K48_)	03/86-12/93	J7R 746, J7R 747	88	330017, 330018	330037	330181, 330536	330253	
	Saloon (L48_)	03/86-12/93	J7R 746, J7R 747	88	330017, 330018, 330340	330037	330181, 330536	330248, 330253	
	(B48_)	02/90-10/92	J7R 740	99	330017, 330018	330037, 330067	330132, 330181, 330466	330253	
	Estate (K48_)	06/90-02/94	J7R 740	99	330017, 330018	330037	330132, 330181, 330466, 330536	330253	
	Saloon (L48_)	02/90-06/94	J7R 740	99	330017	330037	330132, 330181, 330466		
2.0 4x4	Estate (K48_)	03/89-12/93	J7R 746, J7R 747	88	330017, 330018, 330340	330037	330181, 330536	330248	
	(B48_)	09/90-10/92	J7R 740	99	330017, 330018, 330340	330037, 330067	330132, 330181, 330466	330248	
	Saloon (L48_)	12/89-02/94	J7R 740	99	330017, 330340	330037	330132, 330181, 330466	330248	
2.0 Turbo	Saloon (L48_)	02/90-10/92	J7R 756	119	330017	330037	330132, 330214, 330466	330253	

OPS Oil Pressure Switches **BLS** Brake Light Switches **TT-RF** Temperature Transmitter and Radiator Fan Switches **RLS** Reverse Light Switches **VAR** Various

ERA S.p.A. Moncalieri (TO) Italy - tel: +39 011 6891511 - fax: +39 011 6472862 - www.eranet.it

Vehicle		Date	Engine	kW	OPS	BLS	TT-RF	RLS	VAR
2.0 Turbo	Saloon (L48_)	04/87-03/90	J7R 752	129	330017	330037, 330055	330132, 330209, 330214, 330466, 330536	330253	
2.0 Turbo 4x4	Saloon (L48_)	02/90-10/92	J7R 756	119	330017, 330340	330037	330132, 330214, 330466	330248	
	Saloon (L48_)	08/89-10/93	J7R 752	129	330017, 330340	330037, 330055	330132, 330209, 330214, 330466, 330536	330248, 330253	
2.1 D	Estate (K48_)	10/86-09/90	J8S 704	48	330017, 330018	330037	330181, 330209, 330536	330237, 330253	
	Saloon (L48_)	03/86-12/89	J8S 704	48	330018, 330340	330037, 330055	330169, 330181, 330209, 330536	330237, 330248, 330253	
	Box (S48_)	06/86-08/94	J8S 704	49	330017, 330018, 330340	330037, 330067	330181, 330536	330248, 330253	
	(B48_)	04/92-06/94	J8S 784	51	330017, 330018, 330340	330037, 330067	330181, 330536	330248, 330253	
	Estate (K48_)	02/92-09/95	J8S 784	51	330017, 330018, 330340	330037, 330067	330181, 330536	330248, 330253	
	Saloon (L48_)	10/92-06/94	J8S 784	51	330017, 330018, 330340	330037, 330067	330181, 330536	330248, 330253	
	(B48_)	09/89-12/92	J8S 600, J8S 740	53	330017, 330018, 330340	330037, 330067	330181, 330536	330248, 330253	
	Estate (K48_)	08/89-12/92	J8S 600, J8S 740	53	330017, 330018, 330340	330037	330181, 330536	330248, 330253	
	Saloon (L48_)	05/89-06/94	J8S 600, J8S 740	53	330017, 330018, 330340	330037	330181, 330536	330248, 330253	
2.1 D 4x4	Estate (K48_)	10/88-05/92	J8S 704	48	330017, 330018, 330340	330037	330181, 330209, 330536	330248	
2.1 Turbo-D	(B48_)	09/89-06/94	J8S 714, J8S 786, J8S 788	65	330017, 330018, 330340	330037, 330055, 330067	330169, 330181, 330209, 330536	330237, 330248, 330253	
	Estate (K48_)	10/86-11/93	J8S 714, J8S 786, J8S 788	65	330017, 330018	330037	330181, 330209, 330536	330237, 330253	
	Saloon (L48_)	03/86-06/94	J8S 714, J8S 786, J8S 788	65	330017, 330018, 330340	330037, 330055	330169, 330181, 330209, 330536	330237, 330248, 330253	
2.2	(B48_)	09/89-06/94	J7T 754, J7T 755	79	330017, 330018	330037, 330067	330132, 330181, 330536	330253	
	Estate (K48_)	06/86-11/93	J7T 754, J7T 755	79	330017, 330018	330037	330132, 330181, 330209, 330536	330237, 330253	
	Saloon (L48_)	07/86-02/94	J7T 754, J7T 755	79	330018	330037, 330055	330132, 330181, 330209, 330536	330237, 330253	
2.2 4x4	(B48_)	07/90-06/94	J7T 754, J7T 755	79	330017, 330018, 330340	330037, 330067	330132, 330181, 330536	330248	
	Estate (K48_)	06/86-12/93	J7T 754, J7T 755	79	330017, 330018, 330340	330037	330132, 330181, 330209, 330536	330248	
	Saloon (L48_)	07/90-02/94	J7T 754, J7T 755	79	330018, 330340	330037, 330055	330132, 330181, 330209, 330536	330248	
25			**04/84 - 12/93**						
2.0	(B29_)	04/84-12/92	J6R 706, J6R 707, J6R 760, J6R 762, J6R 763	74	330003, 330018	330037, 330067	330169, 330181, 330209, 330466	330253	
	(B29_)	03/87-12/93	J7R 722	88	330003, 330018	330037, 330067	330169, 330181, 330209, 330536	330253	

RENAULT

OPS Oil Pressure Switches **BLS** Brake Light Switches **TT-RF** Temperature Transmitter and Radiator Fan Switches **RLS** Reverse Light Switches **VAR** Various

Vehicle		Date	Engine	kW	OPS	BLS	TT-RF	RLS	VAR
2.0 12V	(B29_)	06/89-12/92	J7R 726	99	330018	330037, 330067	330132, 330181, 330209, 330466, 330536	330253	
	(B29_)	06/88-12/93	J7R 720	103	330003, 330017, 330018	330037, 330067	330132, 330181, 330209, 330466, 330536	330253	
2.1 Diesel	(B29_)	04/84-05/89	J8S 706	46	330003, 330018	330037, 330067	330169, 330181, 330209, 330536	330253	
	(B29_)	06/89-12/92	J8S 736	51	330018	330037, 330067	330169, 330181, 330209, 330536	330253	
2.1 Turbo-D	(B29_)	04/84-12/92	J8S 708, J8S 738	63	330003, 330018	330037, 330067	330169, 330181, 330209, 330536	330253	
2.2	(B29_)	09/86-12/92	J7T 708, J7T 732, J7T 733	79	330003, 330017, 330018	330037, 330067	330169, 330181, 330209, 330536, 330691	330253	
	(B29_)	04/84-12/89	J7T 706, J7T 707, J7T 714, J7T 715	89	330017, 330018	330037, 330067	330169, 330181, 330209, 330466, 330536, 330691	330253	
	(B29_)	04/84-12/89	J7T 730, J7T 731	91	330017, 330018	330037, 330067	330169, 330181, 330209, 330536, 330691	330253	
2.4 V6 Turbo	(B29_)	10/84-05/90	Z7U 702	133		330037, 330067	330169, 330181, 330209, 330466	330253	
2.5 V6 Turbo	(B29_)	01/90-12/92	Z7U 700	151	330017	330037, 330067	330181, 330209, 330466	330253	
2.7 V6 Injection	(B29_)	04/84-08/89	Z7V 708, Z7V 709, Z7V 711	104		330037, 330067	330169, 330181, 330209, 330466	330253	
2.8 V6	(B29_)	06/87-02/90	Z7W 700	115	330017	330037, 330067	330132, 330181, 330209, 330466	330253	
2.8 V6 Injection	(B29_)	06/86-02/88	Z7W 702	100		330037	330169, 330181, 330209, 330466		
	(B29_)	06/87-12/92	Z7W 706, Z7W 707, Z7W 709	110	330017	330037, 330067	330132, 330181, 330209, 330466	330253	
4			**04/62 - 12/93**						
0.8	(112_)	10/83-10/88	800 705, B1B 707	21	330003	330035, 330037	330169		
1.1	(112_)	06/78-06/90	688 712, C1E 714, C1E 719	25	330003	330035, 330037	330169		
5			**01/72 - 12/85**						
1.3	(122_)	06/79-09/84	810 719	33	330003	330035	330169	330237	
1.4 Alpine A5	(122_)	09/77-09/81	840 725	68	330003	330035	330169, 330531		
1.4 Alpine Turbo	(122_)	10/81-01/85	840 726, C6J 750	79	330003	330035	330169, 330531		
1.4 Turbo	(122_)	06/80-01/85	840 730	118		330035	330531		
9			**09/81 - 12/89**						
1.1	(L42_)	09/81-05/87	C1E 715, C1E 720	35	330003	330037	330084, 330167	330236	
1.2	(L42_)	09/85-12/88	C1G 700, C1G 710	40	330003	330037	330084, 330167	330236	
1.4	(L42_)	09/85-12/88	C2J 720, C2J 766, C2J 767, C2J 768	49	330003	330037	330084, 330167	330236	

OPS Oil Pressure Switches **BLS** Brake Light Switches **TT-RF** Temperature Transmitter and Radiator Fan Switches **RLS** Reverse Light Switches **VAR** Various

ERA S.p.A. Moncalieri (TO) Italy - tel: +39 011 6891511 - fax: +39 011 6472862 - www.eranet.it

Vehicle		Date	Engine	kW	OPS	BLS	TT-RF	RLS	VAR
1.6 D	(L42_)	10/82-12/88	F8M 700, F8M 720, F8M 730	40		330037	330084, 330167	330236	
AVANTIME			**09/01 - 05/03**						
2.0 16V Turbo	(DE0_)	11/01-05/03	F4R 760, F4R 761	120	330340, 330630	330067, 330076	330138	330248, 330543	
2.2 dCi	(DE0_)	05/02-05/03	G9T 712	110	330340, 330630	330067, 330076	330692	330248, 330543	
3.0 V6	(DE0_)	09/01-05/03	L7X 720, L7X 721	152	330340	330067, 330076	330624	330248, 330543	
CLIO			**05/90 -**						
1.1	I (B/C57_, 5/357_)	01/91-09/98	C1E 700	34	330018, 330340	330055	330181	330248	
	II Box (SB0/1/2_)	09/98-	D7F 720, D7F 722	43	330018, 330340	330510, 330707	330138	330248	
1.2	I (B/C57_, 5/357_)	01/91-01/96	E7F 706	40	330018, 330340	330055, 330067	330132, 330146, 330181	330248	
	I (B/C57_, 5/357_)	01/96-09/98	D7F 730	40	330018, 330340	330055, 330067	330132, 330181	330248	
	I (B/C57_, 5/357_)	01/96-12/96	C3G 720	40	330018, 330340	330055, 330067	330132, 330181	330248	
	I Box (S57_)	01/91-09/98	E7F 706	40	330018, 330340	330055, 330067	330132, 330146, 330181	330248	
	I (B/C57_, 5/357_)	05/90-09/98	E7F 700, E7F 708, E7F 750	43	330018, 330340	330055, 330067	330132, 330146, 330181	330248	
	I (B/C57_, 5/357_)	01/96-09/98	D7F 730	43	330018, 330340	330055, 330067	330132, 330181	330248	
	II (BB0/1/2_, CB0/1/2_)	09/98-	D7F 710, D7F 720, D7F 726	43	330018, 330340	330510, 330707	330138	330248	
	I (B/C57_, 5/357_)	05/90-03/96	E5F 710	44	330018, 330340	330055, 330067	330146, 330181, 330466	330248	
	I Box (S57_)	01/91-09/98	E7F 750	44	330018, 330340	330055, 330067	330132, 330146, 330181	330248	
	II (BB0/1/2_, CB0/1/2_)	03/99-05/01	D7F 722	44		330707			
	II Box (SB0/1/2_)	03/99-10/03	D7F 726	44		330707			
	III (BR0/1, CR0/1)	10/05-	D4F 764	57		330728, 330729, 330731		330750	
1.2 16V	III (BR0/1, CR0/1)	06/05-	D4F 740	48		330728, 330729, 330731		330750	
	II (BB0/1/2_, CB0/1/2_)	06/01-	D4F 712, D4F 714	55	330018, 330340	330510, 330707, 330708, 330717, 330728	330138	330248, 330750	
	III (BR0/1, CR0/1)	06/05-	D4F 740	55	330578	330728, 330729, 330731	330138	330543, 330750	
	III (BR0/1, CR0/1)	06/05-	D4F 764	58	330578	330728, 330729, 330731	330138	330750	
	III (BR0/1, CR0/1)	05/07-	D4F 784	74	330578	330728, 330729, 330731	330138	330543, 330750	
1.2 16V Hi-Flex	III (BR0/1, CR0/1)	07/08-	D4F 740	55		330728, 330729, 330731		330750	
1.4	I (B/C57_, 5/357_)	01/91-09/98	E7J 756, E7J 757	55	330018, 330340	330055, 330067	330132, 330146, 330181	330248	
	II (BB0/1/2_, CB0/1/2_)	09/98-05/05	E7J 780	55	330018, 330340	330510, 330707	330138	330248	
	I (B/C57_, 5/357_)	01/91-09/98	E7J 601, E7J 718, E7J 719	58	330018, 330340	330055, 330067	330132, 330146, 330181	330248	
	I (B/C57_, 5/357_)	01/91-09/98	E7J 710	59	330018, 330340	330055, 330067	330132, 330146, 330181	330248	

OPS Oil Pressure Switches **BLS** Brake Light Switches **TT-RF** Temperature Transmitter and Radiator Fan Switches **RLS** Reverse Light Switches **VAR** Various

Vehicle		Date	Engine	kW	OPS	BLS	TT-RF	RLS	VAR
1.4 16V	II (BB0/1/2_, CB0/1/2_)	10/99-08/00	K4J 712, K4J 713	70	330027, 330340	330510, 330707	330138	330248	
	II (BB0/1/2_, CB0/1/2_)	08/00-	K4J 700, K4J 712, K4J 713	72	330027, 330340, 330630	330510, 330707	330138, 330692	330248	
	III (BR0/1, CR0/1)	06/05-	K4J 780	72	330630, 330698	330728, 330729, 330731	330558, 330692	330750	
1.5 D	II (BB0/1/2_, CB0/1/2_)	08/04-	K9K 714	50	330698, 330699	330707, 330708, 330717, 330728	330692	330750	
	III (BR0/1, CR0/1)	11/07-	K9K 750	60	330630, 330698	330728, 330729, 330731	330558, 330692	330750	
1.5 dCi	II (BB0/1/2_, CB0/1/2_)	06/05-	K9K 740	47	330698, 330699	330707, 330708, 330717, 330728	330558, 330692		
	II (BB0/1/2_, CB0/1/2_)	06/01-	K9K 700, K9K 704	48	330027, 330340, 330630	330510, 330707, 330708, 330717, 330728	330692	330248	
	II Box (SB0/1/2_)	06/01-	K9K 700	48	330027, 330340, 330630	330510, 330707, 330708, 330717, 330728	330692	330248	
	III (BR0/1, CR0/1)	05/05-	K9K 752	48	330630, 330698	330728, 330729, 330731	330558, 330692	330543, 330750	
	II Box (SB0/1/2_)	04/04-	K9K 714	50	330698, 330699	330707, 330708, 330717, 330728	330692	330750	
	III (BR0/1, CR0/1)	06/05-	K9K 768	50	330698	330728, 330729, 330731	330558, 330692	330543, 330750	
	II (BB0/1/2_, CB0/1/2_)	06/01-10/03	K9K 702	59	330630	330707, 330708, 330717, 330728	330692		
	II Box (SB0/1/2_)	06/01-10/04	K9K 702	59	330630	330707, 330708, 330717, 330728	330692		
	II (BB0/1/2_, CB0/1/2_)	06/01-	K9K 702	60	330340, 330630	330510, 330707, 330708, 330717, 330728	330692	330248	
	II Box (SB0/1/2_)	11/03-	K9K 710	60	330630	330707, 330708, 330717, 330728	330692		
	II (BB0/1/2_, CB0/1/2_)	02/07-	K9K 718	62	330698, 330699	330707, 330708, 330717, 330728	330692		
	III (BR0/1, CR0/1)	06/05-	K9K 766	63	330698	330728, 330729, 330731	330558, 330692	330543, 330750	
	II (BB0/1/2_, CB0/1/2_)	01/04-	K9K 712	74		330707, 330708, 330717, 330728	330692		
	III (BR0/1, CR0/1)	06/05-	K9K 772	76	330698	330728, 330729, 330731	330558, 330692	330750	
	III (BR0/1, CR0/1)	06/05-	K9K 764	78	330698	330728, 330729, 330731	330558, 330692	330543, 330750	
1.6	II (BB0/1/2_, CB0/1/2_)	09/98-05/05	K7M 744, K7M 745	66	330018, 330340	330510, 330707	330138	330248	
1.6 16V	III (BR0/1, CR0/1)	06/05-	K4M 804	65	330340, 330698	330728, 330729, 330731	330558, 330692	330248, 330543, 330750	
	II (BB0/1/2_, CB0/1/2_)	09/98-	K4M 708, K4M 748	79	330027, 330340, 330630	330510, 330707	330138, 330692	330248	
	III (BR0/1, CR0/1)	06/05-	K4M 800, K4M 801	82	330698	330728, 330729, 330731	330558, 330692	330543, 330750	
1.6 16V GT	III (BR0/1, CR0/1)	06/09-	K4M 862	94	330698	330728, 330729, 330731	330558, 330692	330750	
1.7	I (B/C57_, 5/357_)	01/91-12/93	F2N 770	68	330021, 330340	330055, 330067	330181, 330466	330248	
1.8	I (B/C57_, 5/357_)	01/91-09/98	F3P 710, F3P 714	65	330021, 330340	330055, 330067	330132, 330181, 330466	330248	

OPS Oil Pressure Switches **BLS** Brake Light Switches **TT-RF** Temperature Transmitter and Radiator Fan Switches **RLS** Reverse Light Switches **VAR** Various

ERA S.p.A. Moncalieri (TO) Italy - tel: +39 011 6891511 - fax: +39 011 6472862 - www.eranet.it

Vehicle		Date	Engine	kW	OPS	BLS	TT-RF	RLS	VAR
1.8	I (B/C57_, 5/357_)	08/94-09/98	F3P 754, F3P 755	66	330021, 330340	330055, 330067	330132, 330181, 330466	330248	
	I (B/C57_, 5/357_)	01/91-09/98	F3P 710	70	330018, 330340	330055, 330067	330132, 330146, 330181	330248	
1.8 16V	I (B/C57_, 5/357_)	01/91-03/96	F7P 722	99	330021, 330340	330055, 330067	330132, 330146, 330181	330248	
1.8 Rsi	I (B/C57_, 5/357_)	08/95-09/98	F3P 758	79	330021, 330340	330055, 330067	330181, 330466	330248	
	I (B/C57_, 5/357_)	01/93-08/95	F3P 712	80	330021, 330340	330055, 330067	330132, 330181, 330313	330248	
1.9 D	I (B/C57_, 5/357_)	01/91-09/98	F8Q 730, F8Q 732	47	330021, 330340	330055, 330067	330146, 330181	330248	
	I Box (S57_)	01/91-09/98	F8Q 730, F8Q 732	48	330021, 330340	330055, 330067	330146, 330181	330248	
1.9 D	I (B/C57_, 5/357_)	01/97-09/98	F8Q 678	40	330021, 330340	330055, 330067	330132, 330146, 330181	330248	
	II Box (SB0/1/2_)	03/99-01/00	F8Q 662	40		330707, 330708	330692		
	II (BB0/1/2_, CB0/1/2_)	09/98-05/05	F8Q 630	47	330027, 330340	330510, 330707	330139, 330153, 330181	330248	
	II Box (SB0/1/2_)	09/98-	F8Q 630	47	330027, 330340	330510, 330707, 330708	330139, 330153, 330181, 330692	330248	
	II (BB0/1/2_, CB0/1/2_)	02/00-05/01	F8Q 632	48		330707, 330708	330692		
	II Box (SB0/1/2_)	02/00-05/01	F8Q 632	48		330707, 330708	330692		
1.9 dTi	II (BB0/1/2_, CB0/1/2_)	12/99-05/05	F9Q 780	59	330027, 330340	330510, 330707, 330708	330692	330248	
1.9 DTi	II Box (SB0/1/2_)	02/00-05/01	F9Q 780	59		330707, 330708	330692		
2.0 16V	III (BR0/1, CR0/1)	09/06-	M4R 700	102		330728, 330729, 330731		330543, 330750	
2.0 16V Sport	II (BB0/1/2_, CB0/1/2_)	02/00-	F4R 730	124	330027, 330340	330510, 330707, 330708, 330717, 330728	330138	330248	
	II (BB0/1/2_, CB0/1/2_)	01/04-	F4R 738	132		330707, 330708, 330717, 330728			
	III (BR0/1, CR0/1)	02/06-	F4R 830	145	330698	330728, 330729, 330731		330543, 330750	
	III (BR0/1, CR0/1)	09/08-	F4R 830	148	330698	330728, 330729, 330731		330750	
3.0 V6 Sport	II (BB0/1/2_, CB0/1/2_)	11/00-12/02	L7X 760	166		330707, 330708	330551	330543	
	II (BB0/1/2_, CB0/1/2_)	12/02-	L7X 762	187		330707, 330708		330543	
Williams	I (B/C57_, 5/357_)	01/94-09/98	F7R 700	108	330017, 330340	330055, 330067	330132, 330146, 330181	330248	
CLIO Grandtour			**02/08 -**						
1.2 16V	(KR0/1_)	02/08-	D4F 740	55		330728, 330729, 330731		330750	
	(KR0/1_)	02/08-	D4F 764	58		330728, 330729, 330731		330750	
	(KR0/1_)	02/08-	D4F 784	74		330728, 330729, 330731		330750	
1.2 16V Hi-Flex	(KR0/1_)	07/08-	D4F 740	55		330728, 330729, 330731		330750	
1.5 dCi	(KR0/1_)	02/08-	K9K 768	50	330698	330728, 330729, 330731	330558, 330692	330750	
	(KR0/1_)	02/08-	K9K 766	63	330698	330728, 330729, 330731	330558, 330692	330750	

OPS Oil Pressure Switches **BLS** Brake Light Switches **TT-RF** Temperature Transmitter and Radiator Fan Switches **RLS** Reverse Light Switches **VAR** Various

Vehicle		Date	Engine	kW	OPS	BLS	TT-RF	RLS	VAR
1.5 dCi	(KR0/1_)	02/08-	K9K 772	76	330698	330728, 330729, 330731	330558, 330692	330750	
	(KR0/1_)	02/08-	K9K 764	78	330698	330728, 330729, 330731	330558, 330692	330750	
1.6 16V	(KR0/1_)	02/08-	K4M 800	82	330698	330728, 330729, 330731	330558, 330692	330750	
	(KR0/1_)	11/08-	K4M 862	94	330698	330728, 330729, 330731	330558		
ESPACE			**07/84 -**						
1.9 dCi	IV (JK0/1_)	04/03-02/05	F9Q 820	85	330340, 330630, 330698	330510, 330708, 330717, 330728, 330729, 330731	330692	330248, 330543	
	IV (JK0/1_)	11/02-	F9Q 680,F9Q 820, F9Q 826	88	330340, 330630, 330698	330510, 330708, 330717, 330728, 330729, 330731	330692	330248, 330543	
1.9 dTi	III (JE0_)	02/99-10/02	F9Q 722	72	330027, 330340	330067, 330076	330153, 330181, 330692	330248	
2.0	I (J11_)	01/88-12/90	J6R 734	74	330003, 330018	330054	330181, 330536	330237, 330253	
	II (J/S63_)	01/91-10/96	J7R 768	76	330018	330055	330132, 330209, 330536	330253	
	I (J11_)	07/84-12/90	J6R 234, J6R 236	80	330003, 330017	330054	330181, 330466, 330536	330237, 330253	
	III (JE0_)	11/96-10/00	F3R 728,F3R 729, F3R 742,F3R 768, F3R 769	84	330021, 330027, 330340	330055, 330067	330139, 330153, 330181, 330219	330248	
	IV (JK0/1_)	11/02-02/05	F4R 790	98	330630, 330698	330708, 330717, 330728, 330729, 330731			
	IV (JK0/1_)	11/02-	F4R 790,F4R 792	100	330340, 330630, 330698	330510, 330708, 330717, 330728, 330729, 330731	330138	330248, 330543	
	III (JE0_)	09/01-10/02	F4R 700	102	330027, 330340	330055, 330067	330138	330248	
	IV (JK0/1_)	04/05-	F4R 897	125	330630, 330698	330708, 330717, 330728, 330729, 330731			
2.0 16V	III (JE0_)	10/98-10/02	F4R 700, F4R 701	103	330027, 330340	330055, 330067	330138	330248	
2.0 dCi	IV (JK0/1_)	01/06-	M9R 740	110	330698	330510, 330708, 330717, 330728, 330729, 330731	330558	330543	
	IV (JK0/1_)	01/06-	M9R 760	127	330698	330510, 330708, 330717, 330728, 330729, 330731	330558	330543	
2.0 i	I (J11_)	01/89-12/90	J7R 760	87	330017	330054	330181, 330209, 330536	330253	
2.0 i Quadra	I (J11_)	03/88-12/92	J7R 760	87	330017	330054	330181, 330209, 330536	330253	
2.0 Turbo	IV (JK0/1_)	11/02-	F4R 794,F4R 795, F4R 797	120	330340, 330630, 330698	330510, 330708, 330717, 330728, 330729, 330731	330138	330248, 330543	
2.1 RTDT Quadra	II (J/S63_)	01/91-05/92	J8S 772	65	330017	330055	330536	330253	
2.1 TD	I (J11_)	10/84-12/90	J8S 240, J8S 774	65	330017	330054	330169, 330209, 330536	330237, 330253	
	II (J/S63_)	01/91-10/96	J8S 610, J8S 772, J8S 776, J8S 778	65	330017	330055	330536	330253	
	II (J/S63_)	11/94-10/96	J8S 612	66	330017	330055	330536	330253	

OPS Oil Pressure Switches **BLS** Brake Light Switches **TT-RF** Temperature Transmitter and Radiator Fan Switches **RLS** Reverse Light Switches **VAR** Various

ERA S.p.A. Moncalieri (TO) Italy - tel: +39 011 6891511 - fax: +39 011 6472862 - www.eranet.it

Vehicle		Date	Engine	kW	OPS	BLS	TT-RF	RLS	VAR
2.2	I (J11_)	07/86-12/90	J7T 770	79	330003, 330017	330054	330181, 330209, 330466, 330536	330253	
	II (J/S63_)	01/91-10/96	J7T 772,J7T 773, J7T 776	79	330018	330055	330132, 330209, 330536	330253	
2.2 4x4	II (J/S63_)	03/91-12/96	J7T 772, J7T 773	79	330018	330055	330132, 330209, 330536	330253	
2.2 Quadra	I (J11_)	01/88-12/90	J7T 770	79	330003, 330017	330054	330181, 330209, 330466, 330536	330253	
	I (J11_)	06/87-12/87	J7T 770	81	330003, 330017	330054	330181, 330209, 330466, 330536	330253	
2.2 12V TD	III (JE0_)	11/96-10/00	G8T 714, G8T 716	83	330018	330055, 330067	330132, 330219		
2.2 dCi	III (JE0_)	07/00-10/02	G9T 710	85	330630		330692		
	III (JE0_)	10/00-10/02	G9T 710	95	330630	330055, 330067, 330076	330692		
	IV (JK0/1_)	02/06-	G9T 645	102	330630, 330698	330510, 330731	330692		
	IV (JK0/1_)	11/02-	G9T 742, G9T 743	110	330340, 330630, 330698	330510, 330708, 330717, 330728, 330729, 330731	330692	330248, 330543	
2.8 V6	II (J/S63_)	01/91-10/96	Z7W 712, Z7W 713, Z7W 717	110	330017	330055, 330067	330132, 330466		
3.0	III (JE0_)	11/96-10/98	Z7X 775	123	330017	330055, 330067	330132, 330316		
3.0 dCi	IV (JK0/1_)	11/02-	P9X 701	130		330510, 330731	330107		
	IV (JK0/1_)	01/06-	P9X 715	133		330510, 330731			
3.0 V6 24V	III (JE0_)	10/98-10/02	L7X 727	140	330026	330067	330657		
3.5 V6	IV (JK0/1_)	11/02-	V4Y 711	177	330359	330510, 330731			
FLUENCE			**02/10 -**						
1.5 dCi	(L30_)	02/10-	K9K 834	66	330698	330728	330558, 330692		
	(L30_)	06/05-	K9K 832	78	330698		330558, 330692		
	(L30_)	02/10-	K9K 836	81	330698		330558, 330692		
1.6 16V	(L30_)	02/10-	K4M 838	81	330698			330750	
2.0 16V	(L30_)	02/10-	M4R 714	103		330728			
GRAND SCÉNIC			**04/04 -**						
1.4 16V	III (JZ0/1_)	02/09-	H4J 700	96		330728	330558		
1.5 dCi	II (JM0/1_)	04/04-	K9K 728	74	330630, 330698	330728, 330729, 330730	330692	330543, 330750	
	II (JM0/1_)	05/05-	K9K 728	78	330630, 330698	330728, 330729, 330730	330692	330750	
	III (JZ0/1_)	02/09-	K9K 832	78	330698	330728, 330729	330558, 330692		
1.6	II (JM0/1_)	06/06-	K4M 788	77	330698	330728, 330729, 330730	330558, 330692		
	II (JM0/1_)	04/04-	K4M 761	83	330630, 330698	330728, 330729, 330730	330138, 330558, 330692	330543	
1.9 dCi	II (JM0/1_)	04/04-	F9Q 812	88	330630, 330698	330728, 330729, 330730	330558, 330692	330746, 330747	
	II (JM0/1_)	05/05-	F9Q 816	96	330698	330728, 330729, 330730	330558, 330692	330746, 330747	
	III (JZ0/1_)	02/09-	F9Q 870	96	330698	330728, 330729	330558, 330692		

OPS Oil Pressure Switches **BLS** Brake Light Switches **TT-RF** Temperature Transmitter and Radiator Fan Switches **RLS** Reverse Light Switches **VAR** Various

Vehicle		Date	Engine	kW	OPS	BLS	TT-RF	RLS	VAR
2.0	II (JM0/1_)	04/04-	F4R 770	99	330630, 330698	330728, 330729, 330730	330138	330746, 330747	
	II (JM0/1_)	04/04-	F4R 776	120	330630, 330698	330728, 330729, 330730	330138	330746, 330747	
2.0 dCi	II (JM0/1_)	09/05-	M9R 700	110	330698	330728, 330729, 330730	330558	330543	
	III (JZ0/1_)	02/09-	M9R 615	110	330698	330728, 330729	330558		
	III (JZ0/1_)	04/09-	M9R 610	118	330698	330728, 330729	330558		
KANGOO			**08/97 -**						
1.2	(KC0/1_)	08/97-	D7F 710, D7F 720, D7F 722,D7F 726, D7F 744,D7F 746	43	330018, 330340	330510, 330707, 330708, 330717	330138, 330557	330248	
	Express (FC0/1_)	08/97-	D7F 710, D7F 720, D7F 722, D7F 726, D7F 744, D7F 746	43	330018, 330340	330510, 330707, 330708, 330717	330138, 330557	330248	
1.2 16V	(KC0/1_)	06/01-	D4F 712, D4F 714, D4F 716	55	330018, 330340	330510, 330707, 330708, 330717	330138	330248	
	Express (FC0/1_)	10/01-	D4F 712, D4F 714	55	330018, 330340	330510, 330707, 330708, 330717	330138	330248	
1.4	(KC0/1_)	08/97-	E7J 634, E7J 635, E7J 780, K7J 700, K7J 701	55	330018, 330340	330510, 330707, 330708, 330717	330138	330248	
	Express (FC0/1_)	08/97-	E7J 634, E7J 635, E7J 780, K7J 701	55	330018, 330340	330510, 330707, 330708, 330717	330138	330248	
1.5 dCi	(KC0/1_)	07/03-	K9K 704	42	330630	330707, 330708, 330717	330692	330750	
	Express (FC0/1_)	12/02-	K9K 704	42	330630	330707, 330708, 330717	330692	330750	
	(KC0/1_)	12/01-	K9K 700, K9K 704	48	330027, 330340, 330630	330510, 330707, 330708, 330717	330692	330248, 330750	
	Express (FC0/1_)	12/01-	K9K 700	48	330027, 330340	330510, 330707, 330708, 330717	330692	330248, 330750	
	(KC0/1_)	07/02-	K9K 702, K9K 710	60	330340, 330630	330510, 330707, 330708, 330717	330692	330248, 330750	
	Express (FC0/1_)	04/03-	K9K 702, K9K 710	60	330340, 330630	330510, 330707, 330708, 330717	330692	330248, 330750	
	(KW0/1_)	02/08-	K9K 802	63	330698, 330699	330729, 330730	330558, 330692	330750	
	(KW0/1_)	02/08-	K9K 804	76	330698, 330699	330729, 330730	330558, 330692	330750	
	Express (FW0/1_)	02/08-	K9K 806	76	330698, 330699	330729, 330730	330558, 330692	330750	
1.5 dCi 85	Express (FW0/1_)	02/08-	K9K 802	63	330698, 330699	330729, 330730	330558, 330692	330750	
1.6	(KW0/1_)	02/08-	K7M 750	64		330729, 330730		330750	
	Express (FW0/1_)	02/08-	K7M 750	64		330729, 330730		330750	
	(KC0/1_)	09/99-06/01	K7M 746	66		330707, 330708, 330717			
1.6 16V	(KC0/1_)	06/01-	K4M 750, K4M 752, K4M 753	70	330027, 330340, 330630	330510, 330707, 330708, 330717	330138	330248	
	Express (FC0/1_)	10/01-	K4M 752	70	330027, 330340, 330630	330510, 330707, 330708, 330717	330138	330248	
1.6 16V 4x4	(KC0/1_)	10/01-	K4M 750, K4M 752, K4M 753	70	330027, 330340, 330630	330510, 330707, 330708, 330717	330138	330248	
	Express (FC0/1_)	10/01-	K4M 750, K4M 752, K4M 753	70	330027, 330340, 330630	330510, 330707, 330708, 330717	330138	330248	
1.9 dCi	Express (FC0/1_)	07/03-	F9Q 790	62		330707, 330708, 330717	330692		

OPS Oil Pressure Switches **BLS** Brake Light Switches **TT-RF** Temperature Transmitter and Radiator Fan Switches **RLS** Reverse Light Switches **VAR** Various

ERA S.p.A. Moncalieri (TO) Italy - tel: +39 011 6891511 - fax: +39 011 6472862 - www.eranet.it

Vehicle		Date	Engine	kW	OPS	BLS	TT-RF	RLS	VAR
1.9 dCi 4x4	(KC0/1_)	10/01-	F9Q 782, F9Q 790	59	330027, 330340, 330630	330510, 330707, 330708, 330717	330692	330248	
	Express (FC0/1_)	10/01-	F9Q 782, F9Q 790	59	330027, 330340, 330630	330510, 330707, 330708, 330717	330692	330248	
	(KC0/1_)	10/03-	F9Q 790	62		330707, 330708, 330717	330692		
	Express (FC0/1_)	07/03-	F9Q 790	62		330707, 330708, 330717	330692		
1.9 dTi	(KC0/1_)	02/00-	F9Q 780	59	330027, 330340, 330630	330510, 330707, 330708, 330717	330692	330248	
	Express (FC0/1_)	02/00-	F9Q 780, F9Q 782	59	330027, 330340, 330630	330510, 330707, 330708, 330717	330692	330248	
D 55 1.9	(KC0/1_)	08/97-	F8Q 662	40	330021, 330027, 330340	330510, 330707, 330708, 330717	330139, 330153, 330181	330248	
	Express (FC0/1_)	08/97-	F8Q 662	40	330021, 330027, 330340	330510, 330707, 330708, 330717	330139, 330153, 330181	330248	
D 65 1.9	(KC0/1_)	08/97-	F8Q 630, F8Q 632	47	330021, 330027, 330340	330510, 330707, 330708, 330717	330139, 330153, 330219, 330692	330248	
	Express (FC0/1_)	08/97-	F8Q 630, F8Q 632	47	330021, 330027, 330340	330510, 330707, 330708, 330717	330139, 330153, 330219, 330692	330248	
Elect'road RE	(KC0/1_)	01/02-12/04	5DC 700	22		330707, 330708, 330717			
KANGOO BE BOP			**02/09 -**						
1.5 dCi	(KW0/1_)	02/09-	K9K 806	76	330698, 330699	330729, 330730	330558, 330692	330750	
1.6	(KW0/1_)	02/09-	K4M 830	78	330698	330729, 330730	330558		
KOLEOS			**09/08 -**						
2.0 dCi	(HY_)	09/08-	M9R 832	110	330698	330711, 330719	330558	330746, 330747	
2.0 dCi 4x4	(HY_)	09/08-	M9R 832	110	330698	330711, 330719	330558	330746, 330747	
	(HY_)	09/08-	M9R 830	127	330698	330711, 330719	330558	330746, 330747	
2.5	(HY_)	09/08-	2TR B 700	126		330711, 330719		330746, 330747	
2.5 4x4	(HY_)	09/08-	2TR B 700	126		330711, 330719		330746, 330747	
LAGUNA			**11/93 -**						
1.5 dCi	III (BT0/1)	10/07-	K9K 780	81	330698	330728, 330729	330558, 330692	330543	
	III Grandtour (KT0/1)	10/07-	K9K 780	81	330698	330728, 330729	330558, 330692	330543	
1.6 16V	Grandtour (K56_)	11/97-03/01	K4M 720, K4M 724	79	330027, 330340	330055, 330067, 330076, 330510, 330708, 330717	330138, 330181, 330219, 330558, 330692	330248, 330750	
	I (B56_, 556_)	11/97-03/01	K4M 720, K4M 724	79	330027, 330340	330055, 330067, 330510, 330708, 330717	330138, 330181, 330219, 330558, 330692	330248, 330750	
	II (BG0/1_)	03/01-	K4M 710, K4M 711	79	330340, 330630	330510, 330708, 330717	330138, 330558, 330692	330248, 330543, 330750	
	II Grandtour (KG0/1_)	03/01-	K4M 710, K4M 711	79	330340, 330630	330510, 330708, 330717	330138, 330558, 330692	330248, 330543, 330750	
	III (BT0/1)	10/07-	K4M 824	81	330698	330728, 330729	330558		
	III Grandtour (KT0/1)	10/07-	K4M 824	81	330698	330728, 330729	330558		
	II (BG0/1_)	02/05-	K4M 716	82	330630, 330698	330510, 330708, 330717	330558, 330692	330543, 330750	

OPS Oil Pressure Switches **BLS** Brake Light Switches **TT-RF** Temperature Transmitter and Radiator Fan Switches **RLS** Reverse Light Switches **VAR** Various

Vehicle		Date	Engine	kW	OPS	BLS	TT-RF	RLS	VAR
1.6 16V	II Grandtour (KG0/1_)	02/05-	K4M 716	82	330630, 330698	330510, 330708, 330717	330558, 330692	330543, 330750	
1.8	Grandtour (K56_)	09/95-03/01	F3P 670, F3P 678	66	330021, 330340	330055, 330067, 330510	330132, 330139, 330153, 330181, 330219, 330313	330248	
	I (B56_, 556_)	11/93-03/01	F3P 720, F3P 724	66	330021, 330340	330055, 330067, 330510	330132, 330181, 330219, 330313	330248	
	I (B56_, 556_)	08/95-03/01	F3P 670, F3P 678	66	330021, 330340	330055, 330067, 330510	330132, 330139, 330153, 330181, 330219, 330313	330248	
	Grandtour (K56_)	09/95-03/01	F3P 720, F3P 724	69	330021, 330340	330055, 330067, 330510	330132, 330181, 330219, 330313	330248	
	I (B56_, 556_)	08/95-03/01	F3P 720, F3P 724	69	330021, 330340	330055, 330067, 330510	330132, 330181, 330219, 330313	330248	
1.8 16V	II (BG0/1_)	03/01-	F4P 770, F4P 771, F4P 773, F4P 774, F4P 775	85	330340, 330630	330510, 330708, 330717, 330728, 330729, 330731	330138	330248, 330543, 330750	
	II Grandtour (KG0/1_)	03/01-	F4P 771, F4P 773, F4P 774	85	330340, 330630	330510, 330708, 330717, 330728, 330729, 330731	330138	330248, 330543	
	II (BG0/1_)	03/01-	F4P 770	86		330708, 330717			
	Grandtour (K56_)	04/98-03/01	F4P 760	88	330027, 330340	330055, 330067, 330510	330138, 330181	330248	
	I (B56_, 556_)	04/98-03/01	F4P 760	88	330027, 330340	330055, 330067, 330510	330138, 330181	330248	
	II (BG0/1_)	03/01-	F4P 770, F4P 773	88	330340, 330630	330510, 330708, 330717, 330728, 330729, 330731	330138	330248, 330543	
	II Grandtour (KG0/1_)	03/01-	F4P 770, F4P 773	88	330340, 330630	330510, 330708, 330717, 330728, 330729, 330731	330138	330248, 330543	
	II (BG0/1_)	03/01-	F4P 770, F4P 774	89	330340, 330630	330510, 330708, 330717	330138	330248, 330543	
	II Grandtour (KG0/1_)	03/01-	F4P 770, F4P 774	89	330340, 330630	330510, 330708, 330717	330138	330248, 330543	
1.9 dCi	II (BG0/1_)	03/04-	F9Q 664	68	330698	330510, 330708, 330717	330692	330543	
	II Grandtour (KG0/1_)	03/04-	F9Q 664	68	330698	330510, 330708, 330717	330692	330543	
	II (BG0/1_)	10/01-	F9Q 754	74	330340, 330630	330510, 330708, 330717	330692	330248, 330543	
	II Grandtour (KG0/1_)	10/01-	F9Q 754	74	330340, 330630	330510, 330708, 330717	330692	330248, 330543	
1.9 dCI	II (BG0/1_)	06/01-	F9Q 752	77	330630	330708, 330717	330692		
	II Grandtour (KG0/1_)	06/01-	F9Q 752	77	330630	330708, 330717	330692		
1.9 dCi	Grandtour (K56_)	09/99-03/01	F9Q 718	79	330027	330067, 330076, 330510, 330708, 330717	330692		
	I (B56_, 556_)	09/99-03/01	F9Q 718	79	330027	330067, 330076, 330510, 330708, 330717	330692		
	II (BG0/1_)	03/01-	F9Q 718	79	330630	330708, 330717	330692		
	II Grandtour (KG0/1_)	03/01-	F9Q 718	79	330630	330708, 330717	330692		
	II (BG0/1_)	01/05-	F9Q 674	81	330698	330708, 330717	330692		
	II Grandtour (KG0/1_)	01/05-	F9Q 674	81	330698	330708, 330717	330692		

OPS Oil Pressure Switches **BLS** Brake Light Switches **TT-RF** Temperature Transmitter and Radiator Fan Switches **RLS** Reverse Light Switches **VAR** Various

ERA S.p.A. Moncalieri (TO) Italy - tel: +39 011 6891511 - fax: +39 011 6472862 - www.eranet.it

Vehicle		Date	Engine	kW	OPS	BLS	TT-RF	RLS	VAR
1.9 dCi	II (BG0/1_)	03/01-	F9Q 750, F9Q 756	88	330340, 330630	330510, 330708, 330717	330692	330248, 330543	
	II Grandtour (KG0/1_)	03/01-	F9Q 750, F9Q 756	88	330340, 330630	330510, 330708, 330717	330692	330248, 330543	
	II (BG0/1_)	05/05-	F9Q 758	96	330340, 330698	330510, 330708, 330717	330692	330248	
	II Grandtour (KG0/1_)	05/05-	F9Q 758	96	330340, 330698	330510, 330708, 330717	330692	330248	
1.9 dTi	Grandtour (K56_)	10/97-03/01	F9Q 710, F9Q 716	72	330027, 330340	330055, 330067, 330076, 330510, 330717	330139, 330153, 330181, 330692	330248	
	I (B56_, 556_)	10/97-03/01	F9Q 710, F9Q 716	72	330027, 330340	330055, 330067, 330076, 330510, 330717	330139, 330153, 330181, 330692	330248	
2.0	I (B56_, 556_)	11/93-03/01	--	70	330021, 330027, 330340	330055, 330067, 330510	330139, 330153, 330181, 330219	330248	
	Grandtour (K56_)	09/95-03/01	F3R 722, F3R 723	83	330021, 330340	330055, 330067, 330076, 330510, 330717	330132, 330181, 330219, 330313	330248	
	I (B56_, 556_)	11/93-03/01	F3R 722, F3R 723	83	330021, 330340	330055, 330067, 330076, 330510, 330717	330132, 330181, 330219, 330313	330248	
	II Grandtour (KG0/1_)	09/02-05/05	F4R 713	95	330630	330708, 330717			
2.0 16V	II (BG0/1_)	08/02-	F4R 712, F4R 713, F4R 714, F4R 715	99	330027, 330340, 330630, 330698	330510, 330708, 330717	330138	330248, 330543, 330750	
	II Grandtour (KG0/1_)	08/02-	F4R 712, F4R 713, F4R 714, F4R 715	99	330027, 330340, 330630, 330698	330510, 330708, 330717	330138	330248, 330543, 330750	
	Grandtour (K56_)	09/95-03/01	N7Q 700, N7Q 704	102	330340	330055, 330067, 330510	330108, 330181, 330219, 330316	330248	
	I (B56_, 556_)	06/95-03/01	N7Q 700, N7Q 704	102	330340	330055, 330067, 330510	330108, 330181, 330219, 330316	330248	
	Grandtour (K56_)	09/99-03/01	F4R 780	103	330027, 330340	330067, 330510	330138	330248	
	I (B56_, 556_)	09/99-03/01	F4R 780	103	330027, 330340	330067, 330510	330138	330248	
	III (BT0/1)	10/07-	M4R 704	103		330728, 330729		330543	
	III Grandtour (KT0/1)	10/07-	M4R 704	103		330728, 330729		330543	
	II (BG0/1_)	01/05-	F4R 786	125	330630, 330698	330708, 330717			
	II Grandtour (KG0/1_)	01/05-	F4R 787	125	330630, 330698	330708, 330717			
	II (BG0/1_)	01/05-	F4R 886	150	330698	330708, 330717			
	II Grandtour (KG0/1_)	01/05-	F4R 886	150	330698	330708, 330717			
2.0 16V IDE	II (BG0/1_)	04/01-	F5R 700	103	330630	330510, 330708, 330717	330138		
	II Grandtour (KG0/1_)	04/01-	F5R 700	103	330630	330510, 330708, 330717	330138		
2.0 16V Turbo	II (BG0/1_)	01/03-	F4R 764, F4R 765, F4R 786, F4R 787	120	330340, 330630, 330698	330510, 330708, 330717	330138	330248, 330543	
	II Grandtour (KG0/1_)	01/03-	F4R 764, F4R 765, F4R 786, F4R 787	120	330340, 330630, 330698	330510, 330708, 330717	330138	330248, 330543	
	Coupe (DT0/1)	09/08-	F4R 811	125	330698	330728, 330729			
	III (BT0/1)	10/07-	F4R 811	125	330698	330728, 330729			
	III Grandtour (KT0/1)	10/07-	F4R 811	125	330698	330728, 330729			
2.0 dCi	III (BT0/1)	10/07-	M9R 802	96	330698	330728, 330729	330558	330543	
	III Grandtour (KT0/1)	10/07-	M9R 802	96	330698	330728, 330729	330558	330543	

OPS Oil Pressure Switches **BLS** Brake Light Switches **TT-RF** Temperature Transmitter and Radiator Fan Switches **RLS** Reverse Light Switches **VAR** Various

Vehicle		Date	Engine	kW	OPS	BLS	TT-RF	RLS	VAR
2.0 dCi	Coupe (DT0/1)	10/07-	M9Ra 742	110	330698	330728, 330729	330558		
	II (BG0/1_)	08/05-	M9R 740	110	330698	330510, 330708, 330717	330558	330543	
	II Grandtour (KG0/1_)	08/05-	M9R 740	110	330698	330510, 330708, 330717	330558	330543	
	III (BT0/1)	10/07-	M9R 740	110	330698	330728, 330729	330558		
	III Grandtour (KT0/1)	10/07-	M9R 740	110	330698	330728, 330729	330558		
	Coupe (DT0/1)	09/08-	M9R 816	127	330698	330728, 330729	330558		
	II (BG0/1_)	01/06-	M9R 760	127	330698	330510, 330708, 330717	330558	330543	
	II Grandtour (KG0/1_)	01/06-	M9R 760	127	330698	330510, 330708, 330717	330558	330543	
	III (BT0/1)	01/08-	M9R 800	127	330698	330728, 330729	330558		
	III Grandtour (KT0/1)	01/08-	M9R 800	127	330698	330728, 330729	330558		
2.0 dCi GT	III (BT0/1)	03/08-	M9R 816	131	330698	330728, 330729	330558		
	III Grandtour (KT0/1)	03/08-	M9R 816	131	330698	330728, 330729	330558		
2.0 GT	III (BT0/1)	03/08-	F4R 800	150	330698	330728, 330729			
	III Grandtour (KT0/1)	03/08-	F4R 800	150	330698	330728, 330729			
2.2 D	Grandtour (K56_)	09/95-03/01	G8T 706, G8T 752, G8T 790, G8T 794	61	330018, 330340	330055, 330067, 330076, 330510, 330717	330132, 330219	330248	
	I (B56_, 556_)	11/93-03/01	G8T 706, G8T 752, G8T 790, G8T 794	61	330018, 330340	330055, 330067, 330076, 330510, 330717	330132, 330219	330248	
2.2 dCi	II (BG0/1_)	04/04-10/05	G9T 600	85	330698	330708, 330717	330692		
	II Grandtour (KG0/1_)	04/04-10/05	G9T 600	85	330698	330708, 330717	330692		
	II (BG0/1_)	05/05-	G9T 600	102	330340, 330630, 330698	330510, 330708, 330717	330692	330248, 330543	
	II Grandtour (KG0/1_)	05/05-	G9T 600	102	330340, 330630, 330698	330510, 330708, 330717	330692	330248, 330543	
	II (BG0/1_)	10/01-	G9T 702	110	330340, 330630, 330698	330510, 330708, 330717	330692	330248, 330543	
	II Grandtour (KG0/1_)	10/01-	G9T 702	110	330340, 330630, 330698	330510, 330708, 330717	330692	330248, 330543	
2.2 dT	Grandtour (K56_)	03/96-03/01	G8T 760	83	330018	330055, 330067, 330510	330132, 330219		
	I (B56_, 556_)	03/96-03/01	G8T 760	83	330018	330055, 330067, 330510	330132, 330219		
3.0	Grandtour (K56_)	02/96-03/01	Z7X 765	123	330017	330055, 330067, 330510	330132, 330219, 330316		
	I (B56_, 556_)	11/93-03/01	Z7X 760, Z7X 765	123	330017	330055, 330067, 330510	330132, 330219, 330316		
3.0 24V	Grandtour (K56_)	03/97-03/01	L7X 700, L7X 701	140	330023, 330026	330055, 330067, 330510	330219, 330657		
	I (B56_, 556_)	03/97-03/01	L7X 700, L7X 701	140	330023, 330026	330055, 330067, 330510	330219, 330657		
3.0 V6 24V	II (BG0/1_)	03/01-	L7X 731	152		330510, 330708, 330717	330624		
	II Grandtour (KG0/1_)	03/01-	L7X 731	152		330510, 330708, 330717	330624		
3.5 V6	Coupe (DT0/1)	09/08-	V4Y 713	175	330697	330728, 330729			

OPS Oil Pressure Switches **BLS** Brake Light Switches **TT-RF** Temperature Transmitter and Radiator Fan Switches **RLS** Reverse Light Switches **VAR** Various

ERA S.p.A. Moncalieri (TO) Italy - tel: +39 011 6891511 - fax: +39 011 6472862 - www.eranet.it

Vehicle		Date	Engine	kW	OPS	BLS	TT-RF	RLS	VAR
LOGAN			**09/04 -**						
1.4	(LS_)	09/04-	K7J 710	55	330577	330707, 330731	330138	330543, 330750	
	Estate (KS_)	10/07-	K7J 710	55	330577	330707, 330731	330138	330543, 330750	
1.5 dCi	(LS_)	04/07-	K9K 792	50	330699	330707, 330731	330692	330543, 330750	
	Estate (KS_)	04/07-	K9K 792	50	330699	330707, 330731	330692	330543, 330750	
1.6	(LS_)	09/04-	K7M 710	64	330699	330707, 330731	330138	330543, 330750	
	Estate (KS_)	04/07-	K7M 710	64	330699	330707, 330731	330138	330543, 330750	
	(LS_)	04/07-	K4M 690	77	330699	330707, 330731	330138	330543, 330750	
	Estate (KS_)	04/07-	K4M 697	77			330138	330543	
MASTER			**07/80 -**						
1.9 dCi 80	II Box (FD)	11/01-	F9Q 772	60	330027, 330340	330707, 330708	330692	330248	
	II Bus (JD/ND)	11/01-	F9Q 772	60	330027, 330340	330707, 330708	330692	330248	
1.9 dTI	II Box (FD)	09/00-	F9Q 770	59	330027	330510, 330708	330181, 330692		
	II Bus (JD/ND)	09/00-	F9Q 770	59	330027	330510, 330708	330181, 330692		
2.2 dCI 90	II Box (FD)	09/00-	G9T 722	66	330018, 330630	330707, 330708	330692		
	II Bus (JD/ND)	09/00-	G9T 722	66	330018, 330630	330707, 330708	330692		
	II Flatbed / Chassis (ED/HD/UD)	09/00-	G9T 722	66	330018, 330630	330707, 330708	330692		
2.3 dCi	IV Box (FV, JV)	02/10-	M9T 690	92	330698	330729, 330730	330558	330750	
	IV Flatbed / Chassis (EV, UV)	02/10-	M9T 690, M9T 692	92	330698	330729, 330730	330558	330750	
	IV Box (FV, JV)	02/10-	M9T 680	107	330698	330729, 330730	330558		
	IV Flatbed / Chassis (EV, UV)	02/10-	M9T 680	107	330698	330729, 330730	330558		
2.3 dCi FWD	IV Box (FV, JV)	02/10-	M9T 670	74	330698	330729, 330730	330558		
	IV Flatbed / Chassis (EV, UV)	02/10-	M9T 670, M9T 676	74	330698	330729, 330730	330558		
	IV Box (FV, JV)	02/10-	M9T 670	92	330698	330729, 330730	330558	330750	
	IV Flatbed / Chassis (EV, UV)	02/10-	M9T 670, M9T 676	92	330698	330729, 330730	330558	330750	
	IV Box (FV, JV)	02/10-	M9T 698	107	330698	330729, 330730	330558	330750	
	IV Flatbed / Chassis (EV, UV)	02/10-	M9T 698	107	330698	330729, 330730	330558	330750	
2.5 D	II Box (FD)	07/98-01/01	S8U 770	59		330707	330132, 330181, 330219		
	II Bus (JD/ND)	07/98-01/01	S8U 770	59		330707	330132, 330181, 330219		
	II Flatbed / Chassis (ED/HD/UD)	07/98-01/01	S8U 770	59		330707	330132, 330181, 330219		
2.5 dCi	III Box (HD, FD)	08/06-	G9U 754	74	330630, 330698	330510, 330707, 330708	330558, 330692	330543	
	III Bus (JD)	08/06-	G9U 754	74	330630, 330698	330510, 330707, 330708	330558, 330692	330543	
	III Flatbed / Chassis (ED, UD)	08/06-	G9U 754	74	330630, 330698	330510, 330707, 330708	330558, 330692	330543	
	III Box (HD, FD)	08/06-	G9U 650	88	330340, 330698	330510, 330707, 330708	330558, 330692	330248	
	III Bus (JD)	08/06-	G9U 650	88	330340, 330698	330510, 330707, 330708	330558, 330692	330248	

OPS Oil Pressure Switches **BLS** Brake Light Switches **TT-RF** Temperature Transmitter and Radiator Fan Switches **RLS** Reverse Light Switches **VAR** Various

Vehicle		Date	Engine	kW	OPS	BLS	TT-RF	RLS	VAR
2.5 dCi	III Flatbed / Chassis (ED, UD)	08/06-	G9U 650	88	330340, 330698	330510, 330707, 330708	330558, 330692	330248	
	III Box (HD, FD)	08/06-	G9U 632	107	330340, 330698	330510, 330707, 330708	330558, 330692	330248	
	III Bus (JD)	08/06-	G9U 632	107	330340, 330698	330510, 330707, 330708	330558, 330692	330248	
	III Flatbed / Chassis (ED, UD)	08/06-	G9U 632	107	330340, 330698	330510, 330707, 330708	330558, 330692	330248	
2.5 dCi 100	III Box (HD, FD)	10/03-	G9U 754	73	330340, 330630	330707, 330708	330692	330248, 330543	
	III Bus (JD)	10/03-	G9U 754	73	330340, 330630	330707, 330708	330692	330248, 330543	
	III Flatbed / Chassis (ED, UD)	10/03-	G9U 754	73	330340, 330630	330707, 330708	330219, 330692	330248, 330543	
2.5 dCi 120	II Box (FD)	10/01-	G9U 720, G9U 754	84	330018, 330340, 330630	330707, 330708	330692	330248, 330543	
	II Bus (JD/ND)	10/01-	G9U 720, G9U 754	84	330018, 330340, 330630	330707, 330708	330692	330248, 330543	
	II Flatbed / Chassis (ED/HD/UD)	10/01-	G9U 720, G9U 754	84	330018, 330340, 330630	330707, 330708	330219, 330692	330248, 330543	
2.8 dTI	II Box (FD)	07/98-10/01	S9W 702	84	330340	330707	330132, 330138, 330181, 330219, 330311	330248	
	II Bus (JD/ND)	07/98-10/01	S9W 702	84	330340	330707	330132, 330138, 330181, 330219, 330311	330248	
	II Flatbed / Chassis (ED/HD/UD)	07/98-10/01	S9W 702	84	330340	330707	330132, 330138, 330181, 330219, 330311	330248	
28-35 2,5 D	I Box (T__)	08/89-07/98	8140.67.2510, S8U 742	55	330003, 330018			330237	
28-35 2,5 TD	I Box (T__)	08/89-07/98	8140.27.2580, S9U 702	72	330018		330169, 330209, 330292	330237	
	I Bus (T__)	08/89-07/98	8140.27.2580, S9U 702	72	330018		330169, 330209, 330292	330237	
28-35 2.0	I Box (T__)	10/86-07/98	J5R 718	58	330003		330169, 330292	330237	
	I Bus (T__)	10/86-07/98	J5R 718	58	330003		330169, 330292	330237	
	I Flatbed / Chassis (P__)	10/86-07/98	J5R 728	58	330003		330169, 330466		
	I Box (T__)	08/80-10/86	829 731	59	330003		330169, 330292, 330466	330237	
	I Bus (T__)	08/80-09/86	829 731	59	330003		330169, 330292, 330466	330237	
28-35 2.1 D	I Box (T__)	08/80-07/98	J8S 330	44	330003		330169, 330209, 330292	330237	
	I Bus (T__)	08/80-07/98	J8S 330	44	330003		330169, 330209, 330292	330237	
28-35 2.4 D	I Box (T__)	08/80-08/89	8140.61.2300, S8U 731	52	330003		330169, 330292	330237	
	I Bus (T__)	08/80-08/89	8140.61.2300, S8U 731	52	330003		330169, 330292	330237	
28-35 2.5 D	I Flatbed / Chassis (P__)	09/80-07/98	8140.61.2300, S8U 731	52	330003		330169, 330292	330237	
	I Bus (T__)	08/89-07/98	8140.67.2510, S8U 742	55	330003, 330018			330237	
3.0 dCi 140	III Box (HD, FD)	10/03-	ZD3 202	100	330340, 330697	330707		330248	
	III Bus (JD)	10/03-	ZD3 200, ZD3 202	100	330340, 330697	330707		330248	
	III Flatbed / Chassis (ED, UD)	10/03-	ZD3 202	100	330340, 330697	330707		330248	

OPS Oil Pressure Switches **BLS** Brake Light Switches **TT-RF** Temperature Transmitter and Radiator Fan Switches **RLS** Reverse Light Switches **VAR** Various

ERA S.p.A. Moncalieri (TO) Italy - tel: +39 011 6891511 - fax: +39 011 6472862 - www.eranet.it

Vehicle		Date	Engine	kW	OPS	BLS	TT-RF	RLS	VAR
30 2,2	I Box (T__)	08/80-07/98	J7T 782, J7T 788	67	330018		330132	330237	
	I Bus (T__)	08/80-07/98	J7T 782, J7T 788	67	330018		330132	330237	
35 2,5 TD	I Box (T__)	08/89-07/98	8140.27.2500, 8140.27.2510, S9U 714	69	330018		330169, 330214, 330292	330237	
	I Bus (T__)	08/89-07/98	8140.27.2500, 8140.27.2510, S9U 714	69	330018		330169, 330214, 330292	330237	
MEGANE		**08/95 -**							
1.4	I Classic (LA0/1_)	09/96-	E7J 626, E7J 764	55	330018, 330340	330073	330132, 330138, 330146, 330181, 330219	330248	
	II Saloon (LM0/1_)	09/03-	K4J 732	60	330630, 330698	330728, 330729, 330730	330558		
	II Estate (KM0/1_)	08/03-	K4J 730	72	330630, 330698	330728, 330729, 330730	330138, 330558, 330692		
	II Saloon (LM0/1_)	09/03-	K4J 730	72	330630, 330698	330728, 330729, 330730	330138, 330558, 330692		
1.4 16V	II (BM0/1_, CM0/1_)	10/03-	K4J 732	60	330630, 330698	330728, 330729, 330730	330138, 330558	330543	
	I (BA0/1_)	03/99-	K4J 714, K4J 750	70	330027, 330340	330073	330138	330248	
	I Cabriolet (EA0/1_)	03/99-	K4J 714, K4J 750	70	330027, 330340	330073	330138, 330181, 330219	330248	
	I Classic (LA0/1_)	03/99-	K4J 714, K4J 750	70	330027, 330340	330069, 330073, 330075	330138, 330181, 330219	330248	
	I Coach (DA0/1_)	03/99-08/03	K4J 714, K4J 750	70	330027, 330340	330069, 330073, 330075	330138, 330181, 330219	330248	
	I Grandtour (KA0/1_)	03/99-	K4J 714, K4J 750	70	330027, 330340	330073	330138	330248	
	II (BM0/1_, CM0/1_)	11/02-	K4J 730	72	330630, 330698	330728, 330729, 330730	330138, 330558, 330692		
1.4 e	I (BA0/1_)	01/96-	E7J 626, E7J 764	55	330018, 330340	330073	330132, 330138, 330146, 330181, 330219	330248	
	I Grandtour (KA0/1_)	03/99-	E7J 626	55	330018, 330340	330069, 330073, 330075	330138, 330146, 330181, 330219	330248	
1.4 Eco	I (BA0/1_)	01/96-03/99	E7J 624	52	330018, 330340	330073	330132, 330146	330248	
1.4 TCe	III Coupe (DZ0/1_)	04/09-	H4J 700	96		330728	330558		
	III Grandtour (KZ0/1)	05/09-	H4J 700	96		330728	330558		
	III Hatchback (BZ0_)	04/09-	H4J 700	96		330728	330558		
1.5 dCi	II (BM0/1_, CM0/1_)	11/02-	K9K 722	60	330340, 330630, 330698	330728, 330729, 330730	330692	330248, 330543, 330750	
	II Estate (KM0/1_)	08/03-	K9K 722	60	330340, 330630, 330698	330728, 330729, 330730	330692	330248, 330543, 330750	
	II Saloon (LM0/1_)	09/03-	K9K 722	60	330630, 330698	330728, 330729, 330730	330692	330750	
	II (BM0/1_, CM0/1_)	05/05-	K9K 724	63	330698	330728, 330729, 330730	330692	330543, 330750	
	II Coupé-Cabriolet (EM0/1_)	05/05-	K9K 724	63	330698	330728, 330729, 330730	330692	330543, 330750	
	II Estate (KM0/1_)	05/05-	K9K 724	63	330698	330728, 330729, 330730	330692	330543, 330750	
	II Saloon (LM0/1_)	05/05-	K9K 724	63	330698	330728, 330729, 330730	330692	330543, 330750	
	III Grandtour (KZ0/1)	05/09-	K9K 834	66	330698	330728	330558, 330692	330750	

OPS Oil Pressure Switches **BLS** Brake Light Switches **TT-RF** Temperature Transmitter and Radiator Fan Switches **RLS** Reverse Light Switches **VAR** Various

Vehicle		Date	Engine	kW	OPS	BLS	TT-RF	RLS	VAR
1.5 dCi	II (BM0/1_, CM0/1_)	10/03-	K9K 729	74	330630, 330698	330728, 330729, 330730	330692	330543, 330750	
	II Estate (KM0/1_)	02/04-	K9K 729	74	330630, 330698	330728, 330729, 330730	330692	330750	
	II Saloon (LM0/1_)	02/04-	K9K 729	74	330630, 330698	330728, 330729, 330730	330692	330750	
	II (BM0/1_, CM0/1_)	01/07-	K9K 728	76	330630, 330698	330728, 330729, 330730	330692	330750	
	II Coupé-Cabriolet (EM0/1_)	01/07-	K9K 728	76	330630, 330698	330728, 330729, 330730	330692	330750	
	II Estate (KM0/1_)	01/07-	K9K 728	76	330630, 330698	330728, 330729, 330730	330692	330750	
	II Saloon (LM0/1_)	01/07-	K9K 728	76	330630, 330698	330728, 330729, 330730	330692	330750	
	II (BM0/1_, CM0/1_)	05/05-	K9K 732	78	330698	330728, 330729, 330730	330692	330746, 330747	
	II Coupé-Cabriolet (EM0/1_)	03/06-	K9K 732	78	330698	330728, 330729, 330730	330692	330543, 330746, 330747	
	II Estate (KM0/1_)	05/05-	K9K 732	78	330698	330728, 330729, 330730	330692	330746, 330747	
	II Saloon (LM0/1_)	05/05-	K9K 732	78	330698	330728, 330729, 330730	330692	330543, 330746, 330747	
	III Grandtour (KZ0/1)	02/09-	K9K 836	81	330698	330728	330558, 330692		
	III Hatchback (BZ0_)	02/09-	K9K 836	81	330698	330728	330558, 330692		
1.6	I (BA0/1_)	02/00-09/00	K7M 704	64	330018, 330340	330073	330138	330248	
	II Saloon (LM0/1_)	09/03-	K4M 768	75	330699	330728, 330729, 330730	330558, 330692		
	II (BM0/1_, CM0/1_)	06/05-	K4M 788	77	330698	330728, 330729, 330730			
	II Coupé-Cabriolet (EM0/1_)	06/05-	K4M 788	77	330698	330728, 330729, 330730			
	II Saloon (LM0/1_)	05/05-	K4M 762	77	330699	330728, 330729, 330730	330558, 330692		
	II Coupé-Cabriolet (EM0/1_)	09/03-	K4M 760	83	330630, 330698	330728, 330729, 330730	330138, 330558, 330692	330543	
	II Estate (KM0/1_)	08/03-	K4M 760	83	330630, 330698	330728, 330729, 330730	330138, 330558, 330692	330543	
	II Saloon (LM0/1_)	09/03-	K4M 760	83	330630, 330698	330728, 330729, 330730	330138, 330558, 330692	330543	
1.6 16V	I (BA0/1_)	03/99-	K4M 700,K4M 701, K4M 704,K4M 708	79	330027, 330340	330073	330138	330248	
	I Cabriolet (EA0/1_)	03/99-	K4M 700,K4M 701, K4M 708	79	330027, 330340	330073	330138, 330181, 330219	330248	
	I Classic (LA0/1_)	03/99-	K4M 700,K4M 701, K4M 708	79	330027, 330340	330069, 330073, 330075	330138, 330181, 330219	330248	
	I Coach (DA0/1_)	03/99-08/03	K4M 700,K4M 701, K4M 708	79	330027, 330340	330069, 330073, 330075	330138, 330181, 330219	330248	
	I Grandtour (KA0/1_)	03/99-	K4M 700,K4M 701, K4M 704,K4M 708	79	330027, 330340	330069, 330073, 330075	330138, 330181, 330219	330248	
	III Coupe (DZ0/1_)	11/08-	K4M 858	81	330698	330728	330558	330750	
	III Grandtour (KZ0/1)	05/09-	K4M 858	81	330698	330728	330558		
	III Hatchback (BZ0_)	11/08-	K4M 858	81	330698	330728	330558		
	II (BM0/1_, CM0/1_)	01/07-	K4M 760	82	330630, 330698	330728, 330729, 330730	330558, 330692		

OPS Oil Pressure Switches **BLS** Brake Light Switches **TT-RF** Temperature Transmitter and Radiator Fan Switches **RLS** Reverse Light Switches **VAR** Various

ERA S.p.A. Moncalieri (TO) Italy - tel: +39 011 6891511 - fax: +39 011 6472862 - www.eranet.it

Vehicle		Date	Engine	kW	OPS	BLS	TT-RF	RLS	VAR
1.6 16V	II Coupé-Cabriolet (EM0/1_)	01/07-	K4M 760	82	330630, 330698	330728, 330729, 330730	330558, 330692		
	II Estate (KM0/1_)	01/07-	K4M 760	82	330630, 330698	330728, 330729, 330730	330558, 330692		
	II Saloon (LM0/1_)	01/07-	K4M 812	82	330698	330728, 330729, 330730	330558, 330692		
	II (BM0/1_, CM0/1_)	11/02-	K4M 760	83	330630, 330698	330728, 330729, 330730	330138, 330558, 330692	330543	
1.6 e	I (BA0/1_)	01/96-03/99	K7M 702,K7M 703, K7M 790	66	330018, 330340	330073	330132, 330146, 330181, 330219	330248	
	I Cabriolet (EA0/1_)	10/96-03/99	K7M 702, K7M 703	66	330018, 330340	330073	330132, 330146, 330181, 330219	330248	
	I Classic (LA0/1_)	09/96-03/99	K7M 702,K7M 703, K7M 790	66	330018, 330340	330073	330132, 330146, 330181, 330219	330248	
	I Coach (DA0/1_)	03/96-03/99	K7M 702, K7M 703	66	330018, 330340	330073	330132, 330146, 330181, 330219	330248	
	Scenic (JA0/1_)	01/97-09/99	K7M 702, K7M 703	66	330018, 330340	330073	330132, 330146, 330181, 330219	330248	
1.6 i	I (BA0/1_)	01/96-03/99	K7M 720	55	330018, 330340	330073	330132, 330146, 330181, 330219	330248	
	I Classic (LA0/1_)	09/96-03/99	K7M 720	55	330018, 330340	330073	330132, 330146, 330181, 330219	330248	
	Scenic (JA0/1_)	01/97-09/99	K7M 720	55	330018, 330340	330073	330132, 330146, 330181, 330219	330248	
1.8 16V	I (BA0/1_)	01/01-	F4P 720, F4P 722	85	330027, 330340	330073	330138	330248	
	I Classic (LA0/1_)	01/01-	F4P 720, F4P 722	85	330027, 330340	330073	330138	330248	
	I Grandtour (KA0/1_)	01/01-	F4P 720, F4P 722	85	330027, 330340	330073	330138	330248	
1.9 D	I Classic (LA0/1_)	09/96-	F8Q 620, F8Q 624	47	330021, 330027, 330340	330069, 330073	330153, 330181, 330219	330248	
	I Grandtour (KA0/1_)	04/99-	F8Q 622, F8Q 790	47			330692		
	I (BA0/1_)	10/96-02/99	F8Q 784	69	330021, 330340	330073	330139, 330153, 330219	330248	
1.9 D Eco	I (BA0/1_)	01/96-	F8Q 620, F8Q 624	47	330021, 330027, 330340	330073	330153, 330181, 330219	330248	
1.9 dCi	II (BM0/1_, CM0/1_)	11/02-12/05	F9Q 808	66	330698	330728, 330729, 330730	330558, 330692	330746, 330747	
	II Estate (KM0/1_)	04/04-12/05	F9Q 808	66	330698	330728, 330729, 330730	330558, 330692	330746, 330747	
	II Saloon (LM0/1_)	09/03-12/05	F9Q 808	66	330698	330728, 330729, 330730	330558, 330692	330746, 330747	
	II (BM0/1_, CM0/1_)	03/04-	F9Q 808	68	330630, 330698	330728, 330729, 330730	330558, 330692	330746, 330747	
	II Estate (KM0/1_)	03/04-	F9Q 808	68	330630, 330698	330728, 330729, 330730	330558, 330692	330746, 330747	
	II Saloon (LM0/1_)	03/04-	F9Q 808	68	330630, 330698	330728, 330729, 330730	330558, 330692	330746, 330747	
	I (BA0/1_)	02/01-	F9Q 732, F9Q 733	75	330027, 330340	330069, 330073	330692	330248	
	I Classic (LA0/1_)	02/01-	F9Q 732, F9Q 738	75	330027, 330340	330069, 330073, 330075	330181, 330219, 330692	330248	
	I Coach (DA0/1_)	02/01-08/03	F9Q 732, F9Q 733	75	330027, 330340	330069, 330073, 330075	330181, 330219, 330692	330248	
	I Grandtour (KA0/1_)	02/01-	F9Q 732, F9Q 738	75	330027, 330340	330069, 330073, 330075	330153, 330181, 330219, 330692	330248	
1.9 DCi	I (BA0/1_)	03/99-07/03	F9Q 732, F9Q 738	77	330027, 330340	330069, 330073	330692	330248	

OPS Oil Pressure Switches **BLS** Brake Light Switches **TT-RF** Temperature Transmitter and Radiator Fan Switches **RLS** Reverse Light Switches **VAR** Various

Vehicle		Date	Engine	kW	OPS	BLS	TT-RF	RLS	VAR
1.9 DCi	I Coach (DA0/1_)	03/99-09/00	F9Q 732, F9Q 738	77			330692		
	II (BM0/1_, CM0/1_)	05/05-	F9Q 818	81	330698	330728, 330729, 330730	330558, 330692	330746, 330747	
	II Coupé-Cabriolet (EM0/1_)	05/05-	F9Q 816	81	330698	330728, 330729, 330730	330558, 330692	330746, 330747	
	II Estate (KM0/1_)	05/05-	F9Q 818	81	330698	330728, 330729, 330730	330558, 330692	330746, 330747	
	II Saloon (LM0/1_)	05/05-	F9Q 804	81	330698	330728, 330729, 330730	330558, 330692	330746, 330747	
	II (BM0/1_, CM0/1_)	11/02-	F9Q 804, F9Q 816, F9Q 818	85	330698	330728, 330729, 330730	330558, 330692	330746, 330747	
	II Coupé-Cabriolet (EM0/1_)	09/03-	F9Q 804, F9Q 816, F9Q 818	85	330698	330728, 330729, 330730	330558, 330692	330746, 330747	
	II (BM0/1_, CM0/1_)	11/02-	F9Q 750	88	330630, 330698	330728, 330729, 330730	330558, 330692	330543, 330746, 330747	
	II Coupé-Cabriolet (EM0/1_)	09/03-	F9Q 800	88	330630, 330698	330728, 330729, 330730	330558, 330692	330543, 330746, 330747	
	II Estate (KM0/1_)	08/03-	F9Q 800	88	330630, 330698	330728, 330729, 330730	330558, 330692	330543, 330746, 330747	
	II Saloon (LM0/1_)	09/03-	F9Q 800	88	330630, 330698	330728, 330729, 330730	330558, 330692	330543, 330746, 330747	
	II (BM0/1_, CM0/1_)	05/05-	F9Q 803	96	330698	330728, 330729, 330730	330558, 330692	330746, 330747	
	II Coupé-Cabriolet (EM0/1_)	05/05-	F9Q 803	96	330698	330728, 330729, 330730	330558, 330692		
	II Estate (KM0/1_)	05/05-	F9Q 803	96	330698	330728, 330729, 330730	330558, 330692		
	II Saloon (LM0/1_)	05/05-	F9Q 803	96	330698	330728, 330729, 330730	330558, 330692		
	III Coupe (DZ0/1_)	11/08-	F9Q 870	96	330698	330728			
	III Grandtour (KZ0/1)	05/09-	F9Q 870	96	330698	330728			
	III Hatchback (BZ0_)	11/08-	F9Q 872	96	330698	330728			
	III Saloon	06/09-	F9Q 870	96	330698	330728			
1.9 dT	I (BA0/1_)	01/96-	F8Q 784, F8Q 786	66	330021, 330027, 330340	330073	330139, 330153, 330181, 330219	330248	
	I Classic (LA0/1_)	09/96-	F8Q 784, F8Q 786	66	330021, 330027, 330340	330073	330139, 330153, 330181, 330219	330248	
	Scenic (JA0/1_)	01/97-09/99	F8Q 784, F8Q 786	66	330021, 330027, 330340	330073, 330075	330139, 330153, 330181, 330219	330248	
1.9 dTi	I (BA0/1_)	02/01-	F9Q 744	59	330027, 330340	330069, 330073	330692	330248	
	I Classic (LA0/1_)	02/01-	F9Q 744	59	330027, 330340	330069, 330073	330692	330248	
	I Grandtour (KA0/1_)	02/01-	F9Q 744	59	330027, 330340	330069, 330073	330692	330248	
	I (BA0/1_)	03/97-02/01	F9Q 730, F9Q 731, F9Q 734, F9Q 736	72	330021, 330027, 330340	330069, 330073	330139, 330153, 330181, 330219, 330692	330248	
	I Classic (LA0/1_)	03/97-02/01	F9Q 730, F9Q 731, F9Q 734, F9Q 736	72	330021, 330027, 330340	330069, 330073, 330075	330139, 330153, 330181, 330219, 330692	330248	
	I Coach (DA0/1_)	03/97-02/01	F9Q 731, F9Q 734, F9Q 736	72	330027, 330340	330069, 330073, 330075	330139, 330153, 330181, 330219, 330692	330248	
	I Grandtour (KA0/1_)	03/99-02/01	F9Q 731, F9Q 736	72	330027, 330340	330069, 330073, 330075	330153, 330181, 330219, 330692	330248	

OPS Oil Pressure Switches **BLS** Brake Light Switches **TT-RF** Temperature Transmitter and Radiator Fan Switches **RLS** Reverse Light Switches **VAR** Various

ERA S.p.A. Moncalieri (TO) Italy - tel: +39 011 6891511 - fax: +39 011 6472862 - www.eranet.it

Vehicle		Date	Engine	kW	OPS	BLS	TT-RF	RLS	VAR
1.9 dTi	Scenic (JA0/1_)	04/97-09/99	F9Q 730, F9Q 734	72	330021, 330027, 330340	330069, 330073	330139, 330153, 330181, 330219	330248	
1.9 TDI	I (BA0/1_)	09/96-	F8Q 784	69	330021, 330340	330073	330139, 330153, 330219	330248	
	I Classic (LA0/1_)	09/96-	F8Q 784	69	330021, 330340	330073	330139, 330153, 330219	330248	
2.0	II Coupé-Cabriolet (EM0/1_)	09/03-	F4R 770	99	330630	330708, 330717	330138		
	II Estate (KM0/1_)	08/03-	F4R 770	99	330630	330708, 330717	330138		
	II Saloon (LM0/1_)	09/03-	F4R 770	99	330630	330708, 330717	330138		
2.0 16V	II (BM0/1_, CM0/1_)	11/02-	F4R 770	99	330630, 330698	330728, 330729, 330730	330138	330746, 330747	
	I Cabriolet (EA0/1_)	01/02-	F4R 770	102	330630, 330698	330728, 330729, 330730		330746, 330747	
	I (BA0/1_)	07/96-	F7R 710, F7R 714	108	330021, 330027, 330340	330073	330139, 330153, 330181, 330219	330248	
	I Cabriolet (EA0/1_)	10/96-11/99	F7R 710, F7R 714	108	330021, 330027, 330340	330073, 330728, 330729	330139, 330153, 330181, 330219	330248	
	I Coach (DA0/1_)	03/96-11/99	F7R 710, F7R 714	108	330021, 330027, 330340	330073, 330728, 330729	330139, 330153, 330181, 330219	330248	
2.0 16V IDE	I Cabriolet (EA0/1_)	11/99-	F5R 740	103	330027, 330340	330073	330138	330248	
	I Coach (DA0/1_)	11/99-08/03	F5R 740	103	330027, 330340	330073	330138	330248	
2.0 16V Turbo	II (BM0/1_, CM0/1_)	05/04-	F4R 776	120	330630, 330698	330728, 330729, 330730	330138	330746, 330747	
	II Coupé-Cabriolet (EM0/1_)	05/04-	F4R 776	120	330630, 330698	330728, 330729, 330730	330138	330746, 330747	
2.0 CVT	III Coupe (DZ0/1_)	05/09-	M4R 711	103	330698	330728, 330729			
	III Hatchback (BZ0_)	02/09-	M4R 711	103	330698	330728, 330729			
2.0 dCi	II (BM0/1_, CM0/1_)	09/05-	M9R 700	110	330698	330728, 330729, 330730	330558	330543	
	II Coupé-Cabriolet (EM0/1_)	09/05-	M9R 700	110	330698	330728, 330729, 330730	330558	330543	
	II Estate (KM0/1_)	09/05-	M9R 700	110	330698	330728, 330729, 330730	330558		
	II Saloon (LM0/1_)	09/05-	M9R 700	110	330698	330728, 330729, 330730	330558		
	III Coupe (DZ0/1_)	04/09-	M9R 615	110	330698	330728, 330729	330558		
	III Coupe (DZ0/1_)	04/09-	M9R 610	118	330698	330728, 330729	330558		
	III Grandtour (KZ0/1)	04/09-	M9R 610	118	330698	330728, 330729	330558		
	III Hatchback (BZ0_)	04/09-	M9R 610	118	330698	330728, 330729	330558		
	II (BM0/1_, CM0/1_)	01/07-	M9R 724	127	330698	330728, 330729, 330730	330558	330543	
2.0 i	I Cabriolet (EA0/1_)	03/99-	F3R 791, F3R 796	80	330021, 330027, 330340	330073	330139, 330153, 330181, 330219	330248	
	I Classic (LA0/1_)	03/99-	F3R 752	80	330021, 330340	330073	330139	330248	
	Scenic (JA0/1_)	01/99-09/99	F3R 796	80	330021, 330027, 330340	330073	330139, 330153, 330181, 330219	330248	
	I (BA0/1_)	01/96-	F3R 750, F3R 751	84	330021, 330340	330073	330139, 330153, 330181, 330219	330248	
	I Classic (LA0/1_)	09/96-	F3R 750, F3R 751	84	330021, 330340	330073	330139, 330153, 330181, 330219	330248	
	I Coach (DA0/1_)	03/96-08/03	F3R 750, F3R 751	84	330021, 330340	330073	330139, 330153, 330181, 330219	330248	

OPS Oil Pressure Switches **BLS** Brake Light Switches **TT-RF** Temperature Transmitter and Radiator Fan Switches **RLS** Reverse Light Switches **VAR** Various

Vehicle		Date	Engine	kW	OPS	BLS	TT-RF	RLS	VAR
2.0 i	Scenic (JA0/1_)	01/97-09/99	F3R 750, F3R 751	84	330021, 330340	330073	330139, 330153, 330181, 330219	330248	
2.0 Renault Sport	II (BM0/1_, CM0/1_)	05/04-	F4R 774	165	330630, 330698	330728, 330729, 330730	330138	330746, 330747	
2.0 RXE 4x4	Scenic (JA0/1_)	05/97-10/99	F3R 750	84	330021, 330340	330073	330139, 330153, 330181, 330219	330248	
2.0 TCe	III Coupe (DZ0/1_)	11/08-	F4R 870	132	330698	330728, 330729			
	III Grandtour (KZ0/1)	11/08-	F4R 870	132	330698	330728, 330729			
	III Hatchback (BZ0_)	11/08-	F4R 870	132	330698	330728, 330729			
MEGANE CC			**06/10 -**						
1.5 dCi	(EZ0/1_)	06/10-	K9K 836	81	330698		330558, 330692		
MODUS			**12/04 -**						
1.2	(F/JP0_)	05/05-	D4F 740	48	330578	330729, 330730, 330731	330138, 330558	330750	
	(F/JP0_)	12/04-	D4F 740	55	330578	330729, 330730, 330731	330138, 330558	330750	
	(F/JP0_)	12/04-	D4F 764	58		330729, 330730, 330731	330558	330750	
1.2 16V	(F/JP0_)	05/07-	D4F 784	74	330340, 330578	330729, 330730, 330731	330138, 330558	330248, 330750	
1.2 16V Hi-Flex	(F/JP0_)	10/08-	D4F 740	55		330729, 330730, 330731	330558	330750	
1.4	(F/JP0_)	12/04-	K4J 770	72	330340, 330630, 330698	330729, 330730, 330731	330558, 330692	330248, 330543, 330750	
1.5 dCi	(F/JP0_)	12/04-	K9K 752	48	330630, 330698	330729, 330730, 330731	330558, 330692	330750	
	(F/JP0_)	12/04-	K9K 768	50	330630, 330698	330729, 330730, 330731	330558, 330692	330750	
	(F/JP0_)	09/05-	K9K 750	60	330698	330729, 330730, 330731	330558, 330692	330750	
	(F/JP0_)	12/04-	K9K 766	63	330698	330729, 330730, 330731	330558, 330692	330543, 330750	
	(F/JP0_)	05/07-	K9K 772	76	330698	330729, 330730, 330731	330558, 330692	330750	
	(F/JP0_)	05/05-	K9K 764	78	330630, 330698	330729, 330730, 330731	330558, 330692	330543, 330750	
1.6	(F/JP0_)	12/04-	K4M 792	65	330340, 330630, 330698	330729, 330730, 330731	330558, 330692	330248, 330543, 330750	
	(F/JP0_)	12/04-	K4M 790, K4M 791	82	330340, 330630, 330698	330729, 330730, 330731	330558, 330692	330248, 330543, 330750	
RAPID			**07/85 - 11/98**						
1.1	Box (F40_, G40_)	06/87-09/91	C1E 756	33	330018, 330340	330055	330181	330236, 330248	
	Box (F40_, G40_)	07/85-04/95	C1E 750, C1E 752, C1E 754, C1E 760, C1E 762, C1E 792	33	330003, 330018, 330340	330055	330169, 330181	330236, 330248	
1.2	Box (F40_, G40_)	09/91-03/98	C3G 710, C3G 712	40	330018, 330340	330055	330132, 330181	330248	
1.4	Box (F40_, G40_)	08/88-03/98	C3J 700, C3J 702, C3J 760, C3J 762	43	330018, 330340	330055	330181	330248	
	Box (F40_, G40_)	07/85-08/91	C1J 768, C1J 780	43	330003, 330018, 330340	330055	330169, 330181	330236, 330248	
	Box (F40_, G40_)	03/86-08/91	C2J 784	44	330003, 330018, 330340	330055	330181	330236, 330248	

OPS Oil Pressure Switches **BLS** Brake Light Switches **TT-RF** Temperature Transmitter and Radiator Fan Switches **RLS** Reverse Light Switches **VAR** Various

ERA S.p.A. Moncalieri (TO) Italy - tel: +39 011 6891511 - fax: +39 011 6472862 - www.eranet.it

Vehicle		Date	Engine	kW	OPS	BLS	TT-RF	RLS	VAR
1.4	Box (F40_, G40_)	09/91-03/98	E7J 720, E7J 724, E7J 726, E7J 773	55	330018, 330340	330055	330132, 330181	330248	
	Box (F40_, G40_)	01/94-03/98	E7J 728	58	330018, 330340	330055	330132, 330181	330248	
1.4 RN	Box (F40_, G40_)	09/91-08/93	E6J 734	44	330018, 330340	330055	330181	330248	
1.6 D	Box (F40_, G40_)	03/86-08/98	F8M 720, F8M 730, F8M 736, F8M 760	40		330055	330169, 330181	330236	
1.9 D	Box (F40_, G40_)	09/94-03/98	F8Q 640, F8Q 682	40	330021, 330027, 330340	330055	330132, 330181	330248	
	Box (F40_, G40_)	09/91-03/98	F8Q 722, F8Q 724, F8Q 774, F8Q 776	47	330021, 330340	330055	330181	330248	
Electric	Box (F40_, G40_)	01/94-11/98	--	21		330055			
SAFRANE		**04/92 - 12/00**							
2.0	I (B54_)	11/92-07/96	J7R 732, J7R 733	77	330017	330055, 330067	330132, 330181, 330214, 330219, 330316, 330536, 330557		
2.0 12V	I (B54_)	04/92-07/96	J7R 734, J7R 735	97	330017	330055, 330067	330132, 330181, 330214, 330219, 330316, 330536, 330557		
2.0 16V	II (B54_)	07/96-12/00	N7Q 710, N7Q 711	100		330055, 330067	330108, 330181, 330214, 330316		
2.1 dT	I (B54_)	11/93-07/96	J8S 760	65	330017, 330018	330055, 330067	330181, 330214, 330316		
2.2	I (B54_)	04/92-07/96	J7T 762	79	330017	330055, 330067	330132, 330181, 330214, 330316, 330536, 330557		
	I (B54_)	04/92-07/96	J7T 760, J7T 761	101	330017	330055, 330067	330132, 330181, 330214, 330219, 330316, 330536, 330557		
2.2 dT	II (B54_)	07/96-12/00	G8T 740	83	330018	330055, 330067	330132, 330214, 330311		
2.5 20V	II (B54_)	07/96-12/00	N7U 700, N7U 701	121		330055, 330067	330108, 330214, 330316		
2.5 dT	I (B54_)	12/92-07/96	S8U 762, S8U 763	83	330018	330055, 330067	330214, 330311		
2.9 24V	II (B54_)	03/99-12/00	L7X 713	140	330018	330055, 330067	330132, 330214, 330316		
3.0 Biturbo 4x4	I (B54_)	02/93-07/96	Z7X 726	193	330018, 330340	330055, 330067	330132, 330214, 330316	330248	
3.0 V6	I (B54_)	12/92-07/96	Z7X 721, Z7X 722, Z7X 723	123	330018	330055, 330067	330132, 330214, 330219, 330316		
	II (B54_)	07/96-12/00	Z7X 721, Z7X 722, Z7X 723	123	330018, 330340	330055, 330067	330132, 330214, 330219, 330316	330248	
3.0 V6 4x4	I (B54_)	12/92-07/96	Z7X 721, Z7X 722, Z7X 723	123	330018, 330340	330055, 330067	330132, 330214, 330219, 330316	330248	
SANDERO		**11/07 -**							
1.4		02/09-	K7J 710	55		330707, 330731		330750	
1.6		02/09-	K7M 710	64	330699	330707, 330731		330750	
SCÉNIC		**09/99 -**							
1.4	II (JM0/1_)	06/03-	K4J 730	72	330340, 330630, 330698	330728, 330729, 330730	330138, 330558, 330692	330248, 330543, 330750	

OPS Oil Pressure Switches **BLS** Brake Light Switches **TT-RF** Temperature Transmitter and Radiator Fan Switches **RLS** Reverse Light Switches **VAR** Various

Vehicle		Date	Engine	kW	OPS	BLS	TT-RF	RLS	VAR
1.4 16V	I (JA0/1_)	09/99-08/03	K4J 714, K4J 750	70	330027, 330340	330073, 330075	330138, 330181, 330219	330248	
	III (JZ0/1_)	02/09-	H4J 700	96		330728	330558		
1.5 dCi	II (JM0/1_)	06/03-	K9K 722	60	330340, 330630, 330698	330728, 330729, 330730	330692	330248, 330543, 330750	
	II (JM0/1_)	05/05-	K9K 722	63	330630, 330698	330728, 330729, 330730	330692	330543, 330750	
	II (JM0/1_)	11/03-	K9K 728	74	330630, 330698	330728, 330729, 330730	330692	330543, 330750	
	II (JM0/1_)	01/07-	K9K 728	76	330630, 330698	330728, 330729, 330730	330692	330750	
	II (JM0/1_)	05/05-	K9K 732	78	330698	330728, 330729, 330730	330692	330543, 330750	
	III (JZ0/1_)	02/09-	K9K 832	78	330698	330728	330558, 330692	330750	
1.6	II (JM0/1_)	06/06-	K4M 788	77	330698	330728, 330729, 330730	330558, 330692	330750	
	II (JM0/1_)	06/03-	K4M 761, K4M 782	83	330630, 330698	330728, 330729, 330730	330138, 330558, 330692	330543	
1.6 16V	I (JA0/1_)	09/99-08/03	K4M 700,K4M 701, K4M 704, K4M 708	79	330027, 330340	330069, 330073, 330075	330138, 330181, 330219	330248	
	II (JM0/1_)	01/07-	K4M 812	82	330698	330728, 330729, 330730	330558, 330692	330750	
1.8 16V	I (JA0/1_)	01/01-08/03	F4P 720, F4P 722	85	330027, 330340	330073	330138	330248	
1.9 D	II (JM0/1_)	06/06-	F9Q 812	85	330630, 330698	330728, 330729, 330730	330558, 330692	330746, 330747	
1.9 dCi	I (JA0/1_)	09/99-08/03	F9Q 732, F9Q 733	75	330027, 330340	330069, 330073, 330075	330219, 330692	330248	
	II (JM0/1_)	05/05-	F9Q 803	81	330698	330728, 330729, 330730	330558, 330692		
	II (JM0/1_)	06/03-	F9Q 812	88	330630, 330698	330728, 330729, 330730	330558, 330692	330746, 330747	
	II (JM0/1_)	06/03-	F9Q 804	92	330698	330728, 330729, 330730	330558, 330692	330746, 330747	
	II (JM0/1_)	05/05-	F9Q 804	96	330698	330728, 330729, 330730	330558, 330692	330746, 330747	
	III (JZ0/1_)	02/09-	F9Q 870	96	330698	330728			
1.9 dCi RX4	I (JA0/1_)	11/00-08/03	F9Q 740	75	330027, 330340	330069, 330073	330692	330248	
1.9 dTi	I (JA0/1_)	02/01-08/03	F9Q 744	59	330027, 330340	330069, 330073	330692	330248	
	I (JA0/1_)	09/99-08/03	F9Q 731, F9Q 734, F9Q 736	72	330027, 330340	330069, 330073, 330075	330139, 330153, 330181, 330219, 330692	330248	
2.0	II (JM0/1_)	06/03-	F4R 770, F4R 771	99	330630	330708, 330717	330138		
2.0 16V	I (JA0/1_)	07/00-08/03	F4R 740, F4R 741	102	330027, 330340	330073	330138	330248	
2.0 16V IDE	I (JA0/1_)	09/99-08/03	F4R 740	103	330027, 330340	330069, 330073	330138, 330181, 330219	330248	
2.0 16V RX4	I (JA0/1_)	06/00-08/03	F4R 744, F4R 746	102	330027, 330340	330069, 330073	330138, 330181, 330219	330248	
2.0 16V Turbo	II (JM0/1_)	05/04-	F4R 776	120	330630, 330698	330728, 330729, 330730	330138	330746, 330747	
2.0 dCi	II (JM0/1_)	09/05-	M9R 700	110	330698	330728, 330729, 330730	330558	330543	
	III (JZ0/1_)	02/09-	M9R 615	110	330698	330728	330558		
	III (JZ0/1_)	04/09-	M9R 610	118	330698	330728	330558		

OPS Oil Pressure Switches **BLS** Brake Light Switches **TT-RF** Temperature Transmitter and Radiator Fan Switches **RLS** Reverse Light Switches **VAR** Various

ERA S.p.A. Moncalieri (TO) Italy - tel: +39 011 6891511 - fax: +39 011 6472862 - www.eranet.it

Vehicle		Date	Engine	kW	OPS	BLS	TT-RF	RLS	VAR
SUPER 5			**10/84 - 12/96**						
1.0	(B/C40_)	10/84-10/88	C1C 700	30	330018, 330340	330037	330169, 330181	330236, 330248	
	Box (S40_)	10/84-10/88	C1C 700	30	330018, 330340	330037	330169, 330181	330236, 330248	
1.1	(B/C40_)	01/86-03/95	C1E 750, C1E 752, C1E 756, C1E 760	33	330003, 330018, 330340	330037	330169, 330181	330236, 330248	
	(B/C40_)	10/84-10/88	C1E 750, C1E 752, C1E 754	34	330003, 330018, 330340	330037	330169, 330181	330236, 330248	
	Box (S40_)	10/84-12/96	C1E 750, C1E 752, C1E 754	34	330003, 330018, 330340	330037	330169, 330181	330236, 330248	
1.2	(B/C40_)	01/87-08/90	C1G 702, C1G 720, C1G 722	40	330018, 330340	330037	330169, 330181	330236, 330248	
1.4	(B/C40_)	10/84-06/88	C1J 768, C1J 780	43	330003, 330018, 330340	330037	330169, 330181, 330466	330236, 330248	
	(B/C40_)	10/85-12/96	C3J 700, C3J 702, C3J 760	43	330003, 330018, 330340	330037	330169, 330181	330236, 330248	
	(B/C40_)	06/87-08/90	C2J 784	44	330003, 330340	330037	330181	330236, 330248	
	(B/C40_)	06/87-07/89	C2J 782	49	330018, 330340	330037	330181	330236, 330248	
	(B/C40_)	10/84-07/89	C2J 700, C2J 780, C2J 781, C2J 788, C2J 789, C2J 798	52	330003, 330018, 330340	330037	330169, 330181, 330466	330236, 330248	
1.4 Turbo	(B/C40_)	08/85-06/89	C1J 788	85	330340	330037	330169, 330181, 330270, 330466	330236, 330248	
	(B/C40_)	04/85-08/90	C1J 782, C1J 784, C1J 788	88	330340	330037	330169, 330181, 330270, 330466	330236, 330248	
1.6 D	(B/C40_)	08/85-12/96	F8M 720, F8M 730	40	330021, 330340	330037	330169, 330181, 330466	330236, 330248	
1.7	(B/C40_)	10/86-03/95	F3N 716, F3N 717	54	330021, 330340	330037	330181, 330466	330236, 330248	
	(B/C40_)	06/87-03/95	F2N 740, F2N 742	64	330021, 330340	330037	330466	330236, 330248	
1.7 i	(B/C40_)	10/86-08/91	F3N 702, F3N 722	69	330021, 330340	330037	330132, 330181, 330466	330236, 330248	
THALIA			**02/98 -**						
1.4	(LB0/1/2_)	08/00-	K7J 700	55	330630	330707			
1.4 16V	(LB0/1/2_)	08/00-	K4J 712	72		330707		330750	
1.5 dCi	(LB0/1/2_)	06/05-	K9K 740	47	330698, 330699	330707, 330728	330558, 330692	330750	
	(LB0/1/2_)	04/02-	K9K 700	48	330698, 330699	330707, 330728	330692		
TRAFIC			**03/89 - 03/01**						
1.4	Box (TXX)	05/89-06/91	C1J 700	35	330003	330055	330181, 330466	330237, 330253	
1.7	Box (TXX)	08/92-08/94	F1N 720	50	330021	330055	330181, 330466	330237, 330253	
	Bus (TXW)	08/92-08/94	F1N 724	50	330021	330055	330181, 330466	330237, 330253	
	Flatbed / Chassis (PXX)	05/89-08/94	F1N 722	50	330021	330055	330181, 330466	330237, 330253	
1.9 D	Box (TXX)	06/97-03/01	F8Q 606	44	330027	330055	330139, 330153	330237, 330253	
	Bus (TXW)	06/97-03/01	F8Q 606	44	330027	330055	330139, 330153	330237, 330253	
2.0	Box (TXX)	05/89-08/90	J5R 716	59	330018	330055	330181, 330466	330237, 330253	
	Bus (TXW)	05/89-08/90	J5R 726	59	330018	330055	330181, 330466	330237, 330253	
2.0 [RWD]	Flatbed / Chassis (PXX)	05/89-10/97	J5R 726	59	330018	330055	330181, 330466	330237, 330253	
2.1 D	Box (TXX)	05/89-06/94	852 750	43	330018	330055	330146, 330466	330237, 330253	
	Bus (TXW)	05/89-06/94	852 720, 852 750	43	330018	330055	330146, 330466	330237, 330253	

OPS Oil Pressure Switches **BLS** Brake Light Switches **TT-RF** Temperature Transmitter and Radiator Fan Switches **RLS** Reverse Light Switches **VAR** Various

Vehicle		Date	Engine	kW	OPS	BLS	TT-RF	RLS	VAR
2.1 D	Box (TXX)	06/94-10/97	J8S 620, J8S 758	47	330018	330055	330146, 330181	330237, 330253	
	Bus (TXW)	06/94-10/97	J8S 620, J8S 758	47	330018	330055	330146, 330181	330237, 330253	
2.1 D [RWD]	Flatbed / Chassis (PXX)	05/89-06/94	852 720	43	330018	330055	330146, 330466	330237, 330253	
	Flatbed / Chassis (PXX)	06/94-10/97	J8S 620, J8S 758	47	330018	330055	330146, 330181	330237, 330253	
2.2	Box (TXX)	05/89-06/94	J7T 780	70	330018	330055	330181, 330466	330237, 330253	
	Bus (TXW)	05/89-06/94	J7T 780	70	330018	330055	330181, 330466	330237, 330253	
	Box (TXX)	06/94-10/97	J7T 600	74	330018	330055	330132, 330181, 330466	330237, 330253	
	Bus (TXW)	06/94-10/97	J7T 600	74	330018	330055	330132, 330181, 330466	330237, 330253	
2.2 4x4	Box (TXX)	05/89-06/94	J7T 780	70	330018	330055	330181, 330466	330237, 330253	
	Bus (TXW)	05/89-06/94	J7T 780	70	330018	330055	330181, 330466	330237, 330253	
	Box (TXX)	06/94-10/97	J7T 600	74	330018	330055	330132, 330181, 330466	330237, 330253	
	Bus (TXW)	06/94-10/97	J7T 600	74	330018	330055	330132, 330181, 330466	330237, 330253	
2.5 D	Box (TXX)	05/89-03/01	8140.67.2500, 8140.67.2550, 8140.67.2580, S8U 750, S8U 752, S8U 758	55	330018	330055	330181	330237, 330253	
	Bus (TXW)	05/89-03/01	8140.67.2500, 8140.67.2550, 8140.67.2580, S8U 750, S8U 752, S8U 758	55	330018	330055	330181	330237, 330253	
2.5 D 4x4	Box (TXX)	05/89-03/01	8140.67.2500, 8140.67.2580, S8U 750, S8U 752	55	330018	330055		330237, 330253	
	Bus (TXW)	08/89-03/01	8140.67.2500, 8140.67.2550, 8140.67.2580, S8U 750, S8U 752, S8U 758	55	330018	330055	330181	330237, 330253	
TRAFIC II			**03/01 -**						
1.9 dCi	Box (FL)	04/01-07/03	F9Q 762	59	330630, 330698	330707, 330708, 330728	330692		
	Bus (JL)	04/01-07/03	F9Q 762	59	330630, 330698	330707, 330708, 330728	330692		
	Flatbed / Chassis (EL)	09/01-07/03	F9Q 762	59	330630, 330698	330707, 330708, 330728	330692		
1.9 dCi 100	Box (FL)	03/01-	F9Q 760	74	330340, 330630, 330698	330707, 330708, 330728	330692	330248, 330543	
1.9 dCI 100	Bus (JL)	03/01-	F9Q 760	74	330340, 330630, 330698	330707, 330708, 330728	330692	330248, 330543	
1.9 dCi 100	Flatbed / Chassis (EL)	03/01-	F9Q 760	74	330630, 330698	330510, 330707, 330708, 330728	330692	330543	
1.9 dCi 80	Box (FL)	03/01-	F9Q 762	60	330340, 330630, 330698	330707, 330708, 330728	330692	330248	
1.9 dCI 80	Bus (JL)	03/01-	F9Q 762	60	330340, 330630, 330698	330707, 330708, 330728	330692	330248	
1.9 dCi 80	Flatbed / Chassis (EL)	03/01-	F9Q 762	60	330340, 330630, 330698	330510, 330707, 330708, 330728	330692	330248	
2.0	Box (FL)	03/01-	F4R 720, F4R 722	88	330027, 330340, 330630, 330698	330510, 330707, 330708, 330728	330138	330248, 330543	
	Bus (JL)	03/01-	F4R 720, F4R 722	88	330027, 330340, 330630, 330698	330510, 330707, 330708, 330728	330138	330248, 330543	

OPS Oil Pressure Switches **BLS** Brake Light Switches **TT-RF** Temperature Transmitter and Radiator Fan Switches **RLS** Reverse Light Switches **VAR** Various

ERA S.p.A. Moncalieri (TO) Italy - tel: +39 011 6891511 - fax: +39 011 6472862 - www.eranet.it

Vehicle		Date	Engine	kW	OPS	BLS	TT-RF	RLS	VAR
2.0	Flatbed / Chassis (EL)	03/01-	F4R 720	88	330027, 330630, 330698	330510, 330707, 330708, 330728	330138	330543	
2.0 16V	Box (FL)	08/06-	F4R 820	86	330027, 330340, 330630, 330698	330510, 330707, 330708, 330728	330138	330248	
	Bus (JL)	08/06-	F4R 820	86	330027, 330340, 330630, 330698	330510, 330707, 330708, 330728	330138	330248	
2.0 dCi 115	Box (FL)	08/06-	M9R 780	84	330340, 330698	330510, 330707, 330708, 330728	330558	330248	
	Bus (JL)	08/06-	M9R 780	84	330340, 330698	330510, 330707, 330708, 330728	330558	330248	
	Flatbed / Chassis (EL)	08/06-	M9R 780	84	330340, 330698	330510, 330707, 330708, 330728	330558	330248	
2.0 dCi 90	Box (FL)	08/06-	M9R 780	66	330340, 330698	330510, 330707, 330708, 330728	330558	330248	
	Bus (JL)	08/06-	M9R 782	66	330340, 330698	330510, 330707, 330708, 330728	330558	330248	
	Flatbed / Chassis (EL)	08/06-	M9R 780	66	330340, 330698	330510, 330707, 330708, 330728	330558	330248	
2.5 dCi	Flatbed / Chassis (EL)	08/07-	G9U 630	84	330698	330707, 330708, 330728	330558, 330692		
2.5 dCi 135	Box (FL)	05/03-	G9U 730	99	330340, 330630, 330698	330707, 330708, 330728	330558, 330692	330248, 330543	
	Bus (JL)	05/03-	G9U 730	99	330340, 330630, 330698	330707, 330708, 330728	330558, 330692	330248, 330543	
	Flatbed / Chassis (EL)	03/01-	G9U 730	99	330630, 330698	330510, 330707, 330708, 330728	330558, 330692	330543	
2.5 dCi 145	Box (FL)	08/06-	G9U 630	107	330340, 330698	330510, 330707, 330708, 330728	330558, 330692	330248	
	Bus (JL)	08/06-	G9U 630	107	330340, 330698	330510, 330707, 330708, 330728	330558, 330692	330248	
	Flatbed / Chassis (EL)	08/06-	G9U 630	107	330340, 330698	330510, 330707, 330708, 330728	330558, 330692	330248	
2.5 DTi	Box (FL)	03/03-07/03	G9U 730	99	330630, 330698	330707, 330708, 330728	330692		
	Bus (JL)	03/03-07/03	G9U 730	99	330630, 330698	330707, 330708, 330728	330692		
TWINGO			**03/93 -**						
1.2	(C06_)	03/93-10/96	C3G 700, C3G 702	40	330018, 330340	330055, 330510	330132, 330181, 330224	330248, 330750	
	(C06_)	05/96-	D7F 700, D7F 701	40	330018, 330340	330055, 330510	330132, 330138, 330181, 330224, 330557	330248, 330750	
	Box (S06_)	03/93-05/96	C3G 700, C3G 702	40	330018, 330340	330055, 330510	330132, 330181, 330224	330248, 330750	
	(C06_)	05/96-	D7F 700, D7F 701, D7F 702, D7F 703, D7F 704	43	330018, 330340	330055, 330510	330132, 330138, 330181, 330224, 330557	330248, 330750	
	(CN0_)	03/07-	D7F 800	43	330578	330729, 330730, 330731	330138	330750	
	Box (S06_)	05/96-	D7F 700, D7F 701, D7F 702, D7F 703, D7F 704, D7F 706	43	330018, 330340	330055, 330510	330132, 330138, 330181, 330224, 330557	330248, 330750	
	(C06_)	09/98-08/00	D7F 702	44				330750	
1.2 16V	(C06_)	08/04-	D4F 708	44	330340	330055, 330510, 330707, 330728	330138	330248, 330543, 330750	

OPS Oil Pressure Switches **BLS** Brake Light Switches **TT-RF** Temperature Transmitter and Radiator Fan Switches **RLS** Reverse Light Switches **VAR** Various

Vehicle		Date	Engine	kW	OPS	BLS	TT-RF	RLS	VAR
1.2 16V	(C06_)	01/01-	D4F 702, D4F 704	55	330018, 330340	330055, 330510, 330707, 330728	330138	330248, 330750	
	(CN0_)	03/07-	D4F 772	56	330578	330729, 330730, 330731	330138	330750	
1.2 Turbo	(CN0_)	03/07-	D4F 780	74	330578	330729, 330730, 330731	330138	330543, 330750	
1.5 dCi	(CN0_)	03/07-	K9K 740	47	330340, 330698, 330699	330729, 330730, 330731	330558, 330692	330248, 330750	
	(CN0_)	04/08-	K9K 718	62	330698, 330699	330730, 330731	330558, 330692	330750	
1.6 RS	(CN0_)	05/08-	K4M 754	98	330698	330729, 330730, 330731	330558		
VEL SATIS			**06/02 -**						
2.0 16 V Turbo	(BJ0_)	04/04-	F4R 766	125	330630, 330698	330510, 330731	330138		
2.0 16V Turbo	(BJ0_)	06/02-	F4R 762, F4R 763	120	330630	330510, 330728, 330729, 330731	330138	330543	
2.0 dCi	(BJ0_)	08/05-	M9R 760	110	330698	330728, 330729, 330731	330558		
	(BJ0_)	01/06-	M9R 760	127	330698	330728, 330729, 330731	330558	330543	
2.0 Turbo	(BJ0_)	04/05-	F4R 867	108	330630, 330698	330731			
2.2 dCi	(BJ0_)	04/04-	G9T 600	85	330698	330728, 330729, 330731	330692		
	(BJ0_)	09/04-	G9T 600	102	330630, 330698	330510, 330728, 330729, 330731	330692	330543	
	(BJ0_)	06/02-	G9T 702	110	330630, 330698	330510, 330728, 330729, 330731	330692	330543	
3.0 dCi	(BJ0_)	06/02-	P9X 701	130	330007	330510, 330731	330107		
	(BJ0_)	06/06-	P9X 715	133		330510, 330731			
3.5	(BJ0_)	10/04-	V4Y 715	170		330731			
3.5 V6	(BJ0_)	06/02-	V4Y 701	177	330359	330510, 330731			
RENAULT TRUCKS									
Kerax			**06/97 -**						
270.18		01/01-	dCi 11-270	195			330137		
320.18		01/01-	dCi 11G	230			330137		
320.26		01/01-	dCi 11G	230			330137		
370.18		01/01-	dCi 11E	266			330137		
370.26		01/01-	dCi 11E	266			330137		
370.32		01/01-	dCi 11E	266			330137		
420.18		01/01-	dCi 11C	303			330137		
420.26		01/01-	dCi 11E	266			330137		
420.32		10/01-	dCi 11C	303			330137		
420.34		01/01-	dCi 11C	303			330137		
Midlum			**01/00 -**						
150.08/B		10/01-	dCi 4B	112			330137		
150.10/B		10/01-	dci 6A	195			330137		

OPS Oil Pressure Switches **BLS** Brake Light Switches **TT-RF** Temperature Transmitter and Radiator Fan Switches **RLS** Reverse Light Switches **VAR** Various

ERA S.p.A. Moncalieri (TO) Italy - tel: +39 011 6891511 - fax: +39 011 6472862 - www.eranet.it

Vehicle		Date	Engine	kW	OPS	BLS	TT-RF	RLS	VAR
180		10/01-	dCi 4C	128			330137		
180.08/B		10/01-	dCi 4C	128			330137		
180.10/B		10/01-	dCi 4C	128			330137		
180.12		10/01-	dCi 4C	128			330137		
220.12		10/01-	dci 6W	158			330137		
220.14		10/01-	dci 6W	158			330137		
220.15		10/01-	dci 6W	158			330137		
220.18/D		10/01-	dci 6W	158			330137		
270.12/C		10/01-	dci 6A	195			330137		
270.13/C		10/01-	dci 6A	195			330137		
270.14/C		10/01-	dci 6A	195			330137		
270.16/C		10/01-	dci 6A	195			330137		
Premium			**04/96 -**						
Distribution 270.18		08/00-	dci 6A	195			330137		
Distribution 320.18		08/00-	dCi 11G	230			330137		
Distribution 320.18 D		08/00-	dCi 11G	230			330137		
Distribution 320.24D		08/00-	dCi 11G	230			330137		
Distribution 320.26D		08/00-	dCi 11G	230			330137		
Distribution 370.18		08/00-	dCi 11E	266			330137		
Distribution 370.18D		08/00-	dCi 11E	266			330137		
Distribution 370.24D		08/00-	dCi 11E	266			330137		
Distribution 370.26D		08/00-	dCi 11E	266			330137		
Distribution 420.18		08/00-	dCi 11C	303			330137		
Distribution 420.18D		08/00-	dCi 11C	303			330137		
Route 320.18		08/00-	dCi 11G	230			330137		
Route 370.18		08/00-	dCi 11E	266			330137		
Route 370.24		08/00-	dCi 11E	266			330137		
Route 370.26		08/00-	dCi 11E	266			330137		
Route 420.18		08/00-	dCi 11C	303			330137		
Route 420.18T		08/00-	dCi 11 B/43, dCi 11C	303			330137		
Route 420.24		08/00-	dCi 11C	303			330137		
Route 420.25		08/00-	dCi 11C	303			330137		
Route 420.26		08/00-	dCi 11C	303			330137		
ROVER									
100			**04/94 - 12/98**						
111	Convertible (XP)	04/94-	11 K2D	44	330019	330041	330196	330249	
114	Convertible (XP)	04/94-	14 K2A, 14 K2D	55	330019	330041	330177, 330196	330249	
100 (METRO)			**11/89 - 12/98**						
111 C/L/S	(XP)	03/90-12/98	11 K2A, 11 K2D	44	330019	330041	330177, 330196	330249	

OPS Oil Pressure Switches **BLS** Brake Light Switches **TT-RF** Temperature Transmitter and Radiator Fan Switches **RLS** Reverse Light Switches **VAR** Various

Vehicle		Date	Engine	kW	OPS	BLS	TT-RF	RLS	VAR
114 D	(XP)	10/92-12/94	TUD 3	38	330023	330041	330147, 330177, 330196	330249	
114 GSi	(XP)	10/94-10/95	14 K4F	76	330019	330041	330111, 330177, 330196	330249	
114 GTI 16V	(XP)	03/90-08/91	14 K4C, 14 K4D	69	330019	330041	330111, 330177, 330196	330249	
	(XP)	08/91-12/98	14 K4F	76	330019	330041	330111, 330177, 330196	330249	
114 GTI/GT 16V CAT	(XP)	03/90-12/98	14 K4C, 14 K4D	66	330019	330041	330111, 330177, 330196	330249	
114 S/L/GTA	(XP)	03/90-12/98	14 K2A, 14 K2D	55	330019	330041	330177, 330196	330249	
115 D	(XP)	12/94-12/98	TUD 5	42	330023	330041	330134, 330177, 330196	330249	
200		**03/85 - 03/00**							
211	(RF)	01/98-03/00	11 K2D	44	330019, 330356	330061	330530, 330643	330263	
213 S	(XH)	09/85-09/89	EV 2	54	330007	330041	330174		
214	Hatchback (XW)	09/93-10/95	14 K2A, 14 K2D	55	330019	330061	330111, 330187, 330196	330249	
214 GSi/Si	Hatchback (XW)	01/90-10/95	14 K4C	70	330019	330061	330111, 330177, 330187, 330196, 330530	330249	
	Hatchback (XW)	12/92-10/95	14 K4F	76	330019	330061	330111, 330187, 330196	330249	
214 i	(RF)	11/95-03/00	14 K2F	55	330019, 330356	330061	330530	330263	
214 Si	(RF)	11/95-03/00	14 K4F	76	330019, 330356	330061	330530, 330643	330263	
214 Si/Gsi	Hatchback (XW)	10/89-10/95	14 K4C, 14 K4D	66	330019	330061	330111, 330187, 330196	330249	
216	Coupe (XW)	10/92-06/99	D 16 A8	90	330007	330061			
216 GSi	Hatchback (XW)	10/89-10/95	D 16 Z2	82	330007	330061			
	Hatchback (XW)	10/89-10/95	D 16 A7	85	330007	330061			
216 GTi	Hatchback (XW)	09/90-10/95	D 16 A8	90	330007	330061			
	Hatchback (XW)	09/90-10/95	D 16 A9	96	330007	330061			
216 Si	(RF)	11/95-03/00	16 K4F	82	330019, 330356	330061	330530, 330643	330249, 330263	
218 D	Hatchback (XW)	09/91-10/95	--	52	330010	330061			
218 K Vi	(RF)	11/95-03/00	18 K4K	107	330019, 330356	330061	330530, 330643		
218 TD	Hatchback (XW)	09/91-10/95	XUD 7TE	65	330010	330061			
220 D/SD	(RF)	11/95-03/00	20 T2R	63	330019, 330356	330061	330116, 330177, 330187		
220 GSi	Coupe (XW)	05/94-06/99	20 T4H	100	330019	330061			
220 GTi	Hatchback (XW)	01/93-10/95	20 T4H	100	330019	330061			
	Hatchback (XW)	09/91-10/95	20 M4F	103	330019	330061	330096, 330177		
220 SDi	(RF)	11/95-03/00	20 T2N	77	330019, 330356		330116, 330177, 330187		
220 Turbo	Coupe (XW)	10/92-06/99	20 T4G	147	330019	330061	330096, 330177		
	Hatchback (XW)	01/93-10/95	20 T4G	147	330019	330061	330177		
25		**09/99 - 05/05**							
1.4 16V	(RF)	10/99-	14 K4M	62	330019, 330356	330061	330530, 330643	330263	

OPS Oil Pressure Switches **BLS** Brake Light Switches **TT-RF** Temperature Transmitter and Radiator Fan Switches **RLS** Reverse Light Switches **VAR** Various

ERA S.p.A. Moncalieri (TO) Italy - tel: +39 011 6891511 - fax: +39 011 6472862 - www.eranet.it

Vehicle		Date	Engine	kW	OPS	BLS	TT-RF	RLS	VAR
1.4 16V	(RF)	10/99-	14 K4F	76	330019, 330356	330061	330530, 330643	330263	
1.6 16V	(RF)	10/99-	16 K4F	80	330019, 330356	330061	330530, 330643	330249, 330263	
1.8 16V	(RF)	10/99-	18 K4F	85	330019, 330356	330061	330530, 330643		
	(RF)	02/00-	18 K4K	107	330019, 330356	330061	330530, 330643		
2.0 iDT	(RF)	10/99-	20 T2N	74	330019, 330356	330061	330116, 330177, 330187		
400			**04/90 - 03/00**						
1.6 i	Tourer (XW)	05/94-11/98	D 16 A8	90	330019	330061	330530	330249	
1.8 i	Tourer (XW)	06/96-11/98	18 K4K	107	330019	330061	330530		
1.8 TD	Tourer (XW)	09/93-11/98	XUD 7TE	65	330010	330061	330177		
2.0 i	Tourer (XW)	05/94-11/98	20 T4H	100	330019, 330356	330061			
414	(XW)	01/93-04/95	14 K4C	70	330019	330061	330111, 330177, 330187, 330196, 330530	330249	
414 GSI/SI	(XW)	04/90-04/95	14 K4C, 14 K4D	66	330019	330061	330111, 330187, 330196	330249	
414 GSI/SI CAT	(XW)	01/93-04/95	14 K4F	76	330019	330061	330111, 330187, 330196	330249	
414 Si	(RT)	05/95-03/00	14 K4F	76	330019, 330356	330061	330530, 330643	330249, 330263	
	Hatchback (RT)	05/95-03/00	14 K4F	76	330019, 330356	330061	330530, 330643	330249, 330263	
416 GSI	(XW)	04/90-04/95	D 16 Z2	82	330007	330061			
416 GSI/GSE	(XW)	04/90-04/95	D 16 A7	85	330007	330061			
416 GTI	(XW)	04/90-04/95	D 16 A8	90	330007	330061			
416 GTI/GTE	(XW)	04/90-04/95	D 16 A9	96	330007	330061			
416 Si	(RT)	05/95-03/00	16 K4F	82	330356	330061	330643	330249, 330263	
	Hatchback (RT)	05/95-03/00	16 K4F	82	330356	330061	330643	330249, 330263	
	(RT)	05/95-03/00	D 16 Y2	83		330061	330095, 330193	330249, 330263	
	Hatchback (RT)	06/95-03/00	D 16 Y2	83		330061	330095, 330193	330249, 330263	
418 D	(XW)	09/91-04/95	--	49	330010	330061			
418 TD	(XW)	09/91-04/95	XUD 7TE	65	330010	330061			
420 D	(RT)	11/95-03/00	20 T2R	63	330019, 330356	330061	330116, 330177, 330187		
	Hatchback (RT)	11/95-03/00	20 T2R	63	330019, 330356	330061	330116, 330177, 330187		
420 Di	(RT)	05/95-03/00	20 T2N	77	330019, 330356	330061	330116, 330177, 330187		
	Hatchback (RT)	05/95-03/00	20 T2N	77	330019, 330356	330061	330116, 330177, 330187		
420 GSI/SLI/GTI/Vite	(XW)	01/93-04/95	20 T4H	100	330019	330061			
420 GTI/GSI/Vitesse	(XW)	02/92-04/95	20 M4F	103	330019	330061	330096, 330177		
420 Si Lux	(RT)	12/95-03/00	20 T4H	100	330019, 330356	330061			
	Hatchback (RT)	12/95-03/00	20 T4H	100	330019, 330356	330061			
420 Turbo	(XW)	01/93-04/95	20 T4G	147	330019	330061	330177		
45			**02/00 -**						
1.4	(RT)	02/00-	14 K4F	76	330019, 330356	330061	330530, 330643	330249, 330263	

OPS Oil Pressure Switches **BLS** Brake Light Switches **TT-RF** Temperature Transmitter and Radiator Fan Switches **RLS** Reverse Light Switches **VAR** Various

Vehicle		Date	Engine	kW	OPS	BLS	TT-RF	RLS	VAR
1.4	Saloon (RT)	02/00-	14 K4F	76	330019, 330356	330061	330530, 330643	330249, 330263	
1.6	(RT)	02/00-	16 K4F	80	330356	330061	330643	330249, 330263	
	Saloon (RT)	02/00-	16 K4F	80	330356	330061	330643	330249, 330263	
1.8	(RT)	02/00-	18 K4F	86	330356	330061	330643		
	Saloon (RT)	02/00-	18 K4F	86	330356	330061	330643		
2.0 iDT	(RT)	02/00-05/05	20 T2N	74	330019, 330356	330061	330116, 330177, 330187		
	Saloon (RT)	02/00-	20 T2N	74	330019, 330356	330061	330116, 330177, 330187		
2.0 V6	(RT)	02/00-	20 K4F	110		330061			
	Saloon (RT)	02/00-	20 K4F	110		330061			
600			**08/93 - 02/99**						
618 i/Si	(RH)	03/96-02/99	F 18 A3	85	330007	330061	330095, 330193		
620 i	(RH)	08/93-06/96	F 20 Z2	85	330007	330061	330095, 330193		
620 Sdi	(RH)	12/94-02/99	20 T2N	77	330019		330116, 330187, 330196		
620 Si	(RH)	08/93-02/99	F 20 Z1	96	330007	330061	330095, 330193		
620 Ti Vitesse	(RH)	07/94-02/99	20 T4G	147	330019	330061			
623 Si	(RH)	08/93-02/99	H 23 A3	116	330006	330061	330095, 330193		
75			**02/99 -**						
1.8	(RJ)	02/99-	K 1.8	88	330356		330643	330244	
	Tourer (RJ)	08/01-	K 1.8	88	330356		330643	330244	
1.8 Turbo	(RJ)	05/03-	--	110	330356		330643	330244	
	Tourer (RJ)	05/03-	--	110	330356		330643	330244	
2.0 CDT	(RJ)	02/99-	M 47 R	85	330356		330643	330244	
	Tourer (RJ)	08/01-	M 47 R	85	330356		330643	330244	
2.0 CDTi	(RJ)	02/03-	204D2	96	330356		330643	330244	
	Tourer (RJ)	02/03-	204D2	96	330356		330643	330244	
2.0 V6	(RJ)	02/99-	20 K4F	110	330356		330643	330244	
	Tourer (RJ)	08/01-	20 K4F	110	330356		330643	330244	
2.5 V6	(RJ)	02/99-10/01	KV 6	129	330356		330643	330244	
	(RJ)	10/01-	25 K4F	130	330356		330643	330244	
	Tourer (RJ)	08/01-	KV 6	130	330356		330643	330244	
800			**10/86 - 02/99**						
820	(XS)	10/88-10/91	--	74			330095, 330177, 330187		
820 16V Turbo	(XS)	01/92-02/99	T 16	132	330019	330061	330095		
	Hatchback (XS)	01/92-02/99	T 16	132	330019	330061	330095		
820 I/SI	(XS)	01/92-02/99	20 T4H	100	330019	330061	330095, 330177, 330187		
	Hatchback (XS)	01/93-02/99	20 T4H	100	330019	330061	330095, 330177, 330187		

OPS Oil Pressure Switches **BLS** Brake Light Switches **TT-RF** Temperature Transmitter and Radiator Fan Switches **RLS** Reverse Light Switches **VAR** Various

ERA S.p.A. Moncalieri (TO) Italy - tel: +39 011 6891511 - fax: +39 011 6472862 - www.eranet.it

Vehicle		Date	Engine	kW	OPS	BLS	TT-RF	RLS	VAR
820 i/Si	Hatchback (XS)	10/88-12/91	20 HD	103	330013, 330019		330095, 330177, 330187		
820 SI	(XS)	10/88-12/91	20 HD M 16	98			330177, 330187		
	Hatchback (XS)	10/88-12/91	20 HD M 16	98			330177, 330187		
820 Sport	(XS)	04/94-03/96	20 T4G	145	330019	330061	330095		
	Hatchback (XS)	04/94-03/96	20 T4G	145	330019	330061	330095		
825 D/SD	(XS)	01/90-02/99	425 SL1RR, 492 4 SHIRG	87	330317	330061	330121, 330177, 330187		
	Hatchback (XS)	01/92-02/99	425 SL1RR, 492 4 SHIRG	87	330317	330061	330121, 330177, 330187		
825 SD	Coupe	09/93-02/99	425 SL1RR, 492 4 SHIRG	87	330317	330061	330121, 330177, 330187		
825 Si	Coupe	04/96-02/99	25 K4F	129	330019	330061	330111, 330530		
825 Si Lux	(XS)	04/96-02/99	25 K4F	129	330019	330061	330111, 330530		
827 24V	Coupe	08/92-02/99	C 27 A1	124	330006	330061	330177, 330187		
827 24V I/SI	Hatchback (XS)	01/92-02/99	C 27 A1	124	330006	330061	330177, 330187		
827 SI/Sterling	(XS)	02/88-02/99	C 27 A1	124	330006	330061	330177, 330187		
	(XS)	02/88-12/91	C 27 A2	130			330177, 330187		
827 Vitesse	Hatchback (XS)	10/88-12/91	C 27 A1	124	330006	330061	330177, 330187		
827 Vitesse/SLI	Hatchback (XS)	10/88-12/91	C 27 A2	130			330177, 330187		
CABRIOLET			**04/90 - 11/99**						
214 1.4	(XW)	01/92-11/99	14 K4C, 14 K4D	66	330019	330061	330111, 330187, 330196	330249	
214 1.4i 16V	(XW)	01/93-11/99	14 K4F	76	330019	330061	330111, 330187, 330196	330249	
216 1.6i	(XW)	01/92-11/99	D 16 A8	90	330007	330061			
216 1.6i 16V	(XW)	01/96-11/99	16 K4F	82	330019	330061	330530	330249	
COUPE			**03/96 - 11/99**						
1.6 16 V		03/96-11/99	16 K4F	82	330019	330061	330530	330249	
1.8 16 V		03/96-11/99	18 K4K	107	330019	330061	330530		
MAESTRO			**09/90 - 01/95**						
1.3		09/90-01/95	--	49	330013	330041	330094, 330177	330233, 330442	
1.6		09/90-01/95	--	63	330013	330041	330177	330233, 330442	
2.0 TD		09/90-01/95	BB	60	330013	330041	330096, 330177		
MINI			**01/91 -**						
1300	MK I	10/92-	12 A2B	37	330013, 330019	330041	330094, 330530		
	MK I	01/92-04/95	12 A2D	39	330013, 330019	330041	330094, 330530		
	MK I	01/91-12/91	12 A2A	45	330013, 330019	330041	330094, 330530		
	MK I	01/92-	12 A2E, 12 A2L	46	330013, 330019	330041	330094, 330530		
	MK I Convertible (XN)	09/92-04/95	12 A2E	46	330013, 330019	330041	330094, 330530		
MONTEGO			**10/84 - 10/95**						
1.3	Estate (XE)	10/84-10/88	12 HL	50	330013	330041	330096, 330177	330233	

OPS Oil Pressure Switches **BLS** Brake Light Switches **TT-RF** Temperature Transmitter and Radiator Fan Switches **RLS** Reverse Light Switches **VAR** Various

Vehicle		Date	Engine	kW	OPS	BLS	TT-RF	RLS	VAR
2.0 GTi		10/88-10/91	--	86	330013	330041	330096, 330177		
	Estate (XE)	10/88-10/91	--	86	330013	330041	330096, 330177		

SAAB

9-3 02/98 -

1,8t	(YS3F)	09/02-	B207E	110		330720, 330721	330137		
	Convertible (YS3F)	08/03-	B207E	110		330720, 330721			
1,8t BioPower	(YS3F)	01/07-	B207E	110		330720, 330721			
	Convertible (YS3F)	01/07-	B207E	110		330720, 330721			
1.8 i	(YS3F)	01/04-	Z 18 XE	90		330720, 330721			
	Estate	03/05-	Z 18 XE	90		330720, 330721			
1.8 t BioPower	Estate	01/07-	B207E	110		330720, 330721			
1.9 TiD	(YS3F)	09/04-	Z 19 DT	88		330720, 330721			
	Estate	03/05-	Z 19 DTJ	88		330720, 330721			
	(YS3F)	09/04-	Z 19 DTH	110		330720, 330721			
	Convertible (YS3F)	01/06-	Z 19 DTH	110		330720, 330721			
	Estate	03/05-	Z 19 DTH	110		330720, 330721			
1.9 TTiD	(YS3F)	12/07-	Z 19 DTR	132		330720, 330721			
	Convertible (YS3F)	12/07-	Z 19 DTR	132		330720, 330721			
	Estate	12/07-	Z 19 DTR	132		330720, 330721			
2.0 i	(YS3D)	02/98-09/02	B204I	96	330003		330137	330244	
	Cabriolet (YS3D)	02/98-08/03	B204I	96	330003		330137	330244	
2.0 SE Turbo	(YS3D)	02/98-09/02	B204R	147	330003		330137	330244	
	Cabriolet (YS3D)	02/98-08/03	B204R	147	330003		330137	330244	
2.0 t	Estate	03/05-	B207E	110		330720, 330721			
	(YS3F)	09/02-	B207L	129		330720, 330721			
	Convertible (YS3F)	08/03-	B207L	129		330720, 330721			
	Estate	03/05-	B207L	129		330720, 330721			
2.0 T	(YS3F)	09/02-	B207R	154		330720, 330721	330137		
	Convertible (YS3F)	08/03-	B207R	154		330720, 330721			
	Estate	03/05-	B207R	154		330720, 330721			
2.0 t BioPower	(YS3F)	01/07-	B207L	129		330720, 330721			
	Convertible (YS3F)	01/07-	B207L	129		330720, 330721			
	Estate	01/07-	B207L	129		330720, 330721			
	(YS3F)	06/07-	--	145		330720, 330721			
	Convertible (YS3F)	06/07-	--	145		330720, 330721			
	Estate	06/07-	--	145		330720, 330721			
2.0 Turbo	(YS3D)	10/98-09/02	B204E	113	330003		330137	330244	
	Cabriolet (YS3D)	10/98-08/03	B204E	113	330003		330137	330244	
	(YS3D)	02/98-09/02	B204L	136	330003		330137	330244	
	Cabriolet (YS3D)	02/98-08/03	B204L	136	330003		330137	330244	
	(YS3D)	10/99-09/02	B205R	151	330003		330137	330244	

OPS Oil Pressure Switches **BLS** Brake Light Switches **TT-RF** Temperature Transmitter and Radiator Fan Switches **RLS** Reverse Light Switches **VAR** Various

ERA S.p.A. Moncalieri (TO) Italy - tel: +39 011 6891511 - fax: +39 011 6472862 - www.eranet.it

Vehicle		Date	Engine	kW	OPS	BLS	TT-RF	RLS	VAR
2.0 Turbo	Cabriolet (YS3D)	10/99-08/03	B205R	151	330003		330137	330244	
2.2 TiD	(YS3D)	02/98-11/00	D223L, X 22 DTH	85			330126, 330137	330244	
	(YS3D)	11/00-09/02	D223L	92			330126, 330137	330244	
	(YS3F)	09/02-	D223L	92	330364, 330365	330720, 330721	330137		
2.3 i	(YS3D)	02/98-09/02	B234I	110	330003		330137	330244	
	Cabriolet (YS3D)	02/98-08/03	B234I	110	330003		330137	330244	
2.8 Turbo V6	(YS3F)	03/05-	--	184		330720, 330721			
	Convertible (YS3F)	02/06-	LP9	184		330720, 330721			
	Estate	03/05-	LP9	184		330720, 330721			
	(YS3F)	12/07-	B284L	188		330720, 330721			
	Convertible (YS3F)	12/07-	B284L	188		330720, 330721			
	Estate	12/07-	B284L	188		330720, 330721			
9-5			**09/97 -**						
2.0 t	(YS3E)	09/97-	B205E	110		330434	330137	330244	
	Estate (YS3E)	10/98-	B205E	110		330434	330137	330244	
	Estate (YS3E)	10/98-	B204R	141		330434	330137	330244	
2.2 TiD	(YS3E)	03/02-	D223L	88	330364	330434	330126, 330137	330244	
	Estate (YS3E)	03/02-	D223L	88	330364	330434	330126, 330137	330244	
2.3 t	(YS3E)	09/97-	B235E	125		330434	330137	330244	
	Estate (YS3E)	10/98-	B235E	125		330434	330137	330244	
	(YS3E)	01/01-	B235E	136		330434	330137	330244	
	Estate (YS3E)	01/01-	B235E	136		330434	330137	330244	
2.3 Turbo	(YS3E)	10/99-09/01	B235R	169		330434	330137	330244	
	Estate (YS3E)	10/99-09/01	B235R	169		330434	330137	330244	
	(YS3E)	09/01-	B235R	184		330434	330137	330244	
	Estate (YS3E)	09/01-	B235R	184		330434	330137	330244	
3.0 TiD	(YS3E)	07/01-	D308L	130	330007	330434		330244	
	Estate (YS3E)	07/01-	D308L	130	330007	330434		330244	
3.0 V6t	(YS3E)	01/98-	B308E	147		330434	330137	330244	
	Estate (YS3E)	10/98-	B308E	147		330434	330137	330244	
90			**08/84 - 08/87**						
2.0		08/84-08/87	B 20 I	74	330003		330089, 330166	330239	
900			**09/78 - 02/98**						
2.0 -16	I (AC4, AM4)	01/86-12/88	B202XI	92	330003	330034	330089, 330116, 330184, 330291	330239	
	I Combi Coupe	01/86-12/88	B202XI	92	330003	330034	330089, 330116, 330184, 330291	330239	
	I (AC4, AM4)	01/89-12/93	B202I	93	330003	330034	330089, 330116, 330184, 330291	330239	
	I Combi Coupe	01/89-08/92	B202I	93	330003	330034	330089, 330116, 330184, 330291	330239	

OPS Oil Pressure Switches **BLS** Brake Light Switches **TT-RF** Temperature Transmitter and Radiator Fan Switches **RLS** Reverse Light Switches **VAR** Various

Vehicle		Date	Engine	kW	OPS	BLS	TT-RF	RLS	VAR
2.0 -16	I Convertible	01/90-06/94	B202I	93	330003	330034	330089, 330116, 330184, 330291	330239	
2.0 -16 Turbo	II	07/93-02/98	B204L	136	330003	330434	330137	330244	
	II Convertible	12/93-02/98	B204L	136	330003	330434	330137	330244	
	II Coupe	12/93-02/98	B204L	136	330003	330434	330137	330244	
2.0 c	I (AC4, AM4)	07/82-12/88	B 20, B201XC	74	330003	330034	330089, 330184, 330291	330239	
	I Combi Coupe	09/79-12/88	B 20, B201XC	74	330003	330034	330089, 330184, 330291	330239	
2.0 i	I (AC4, AM4)	09/85-08/90	B201	81	330003	330034	330089, 330184, 330291	330239	
	I Combi Coupe	09/85-08/90	B201	81	330003	330034	330089, 330184, 330291	330239	
	I (AC4, AM4)	11/80-08/90	B201XI, BI 20	85	330003	330034	330089, 330184, 330291	330239	
	I Combi Coupe	11/80-12/88	B201XI, BI 20	85	330003	330034	330089, 330184, 330291	330239	
	II	08/94-02/98	B204I	96	330003	330434	330137	330244	
	II Convertible	12/93-02/98	B204I	96	330003	330434	330137	330244	
	II Coupe	08/94-02/98	B204I	96	330003	330434	330137	330244	
	II	07/93-07/94	B206I	98	330003	330434		330244	
	II Coupe	12/93-07/94	B206I	98	330003	330434		330244	
2.0 S Turbo-16	I (AC4, AM4)	07/91-12/93	B202S	104	330003	330034	330089, 330116, 330184, 330291	330239	
	I Combi Coupe	09/91-07/93	B202S	104	330003	330034	330089, 330116, 330184, 330291	330239	
	I Convertible	09/91-06/94	B202S	104	330003	330034	330089, 330116, 330184, 330291	330239	
	I (AC4, AM4)	01/92-12/93	B202S	107	330003	330034	330089, 330116, 330184, 330291	330239	
2.0 Turbo	I (AC4, AM4)	10/86-12/91	B201XL	103	330003	330034	330089, 330184, 330291	330239	
	I Combi Coupe	10/86-12/91	B201XL	103	330003	330034	330089, 330184, 330291	330239	
	I (AC4, AM4)	01/86-12/88	B201XL	110	330003	330034	330089, 330184, 330291	330239	
	I Combi Coupe	01/86-12/88	B201XL	110	330003	330034	330089, 330184, 330291	330239	
2.0 Turbo-16	I (AC4, AM4)	11/85-12/93	B202XL	118	330003	330034	330089, 330116, 330184, 330291	330239	
	I Combi Coupe	11/85-06/94	B202XL	118	330003	330034	330089, 330116, 330184, 330291	330239	
	I Convertible	11/86-06/94	B202XL	118	330003	330034	330089, 330116, 330184, 330291	330239	
	I Combi Coupe	01/93-06/94	B202L	132	330003	330034	330089, 330116, 330184, 330291	330239	
2.0 Turbo-16 S	I (AC4, AM4)	01/84-12/88	B202XL	129	330003	330034	330089, 330116, 330184, 330291	330239	
	I Combi Coupe	02/84-12/88	B202XL	129	330003	330034	330089, 330116, 330184, 330291	330239	
	I Convertible	11/86-06/94	B202XL	129	330003	330034	330089, 330116, 330184, 330291	330239	

OPS Oil Pressure Switches **BLS** Brake Light Switches **TT-RF** Temperature Transmitter and Radiator Fan Switches **RLS** Reverse Light Switches **VAR** Various

ERA S.p.A. Moncalieri (TO) Italy - tel: +39 011 6891511 - fax: +39 011 6472862 - www.eranet.it

Vehicle		Date	Engine	kW	OPS	BLS	TT-RF	RLS	VAR
2.0 Turbo-16 S CAT	I Combi Coupe	01/89-12/93	B202XL	125	330003	330034	330089, 330116, 330184, 330291	330239	
	I (AC4, AM4)	01/89-12/93	B202XL	129	330003	330034	330089, 330116, 330184, 330291	330239	
2.1 -16	I (AC4, AM4)	08/90-12/93	B212I	100	330003	330034	330089, 330116, 330184, 330291	330239	
	I Combi Coupe	09/90-07/93	B212I	100	330003	330034	330089, 330116, 330184, 330291	330239	
	I Convertible	08/90-06/94	B212I	100	330003	330034	330089, 330116, 330184, 330291	330239	
2.3 -16	II	07/93-02/98	B234I	110	330003	330434	330137	330244	
	II Convertible	12/93-02/98	B234I	110	330003	330434	330137	330244	
	II Coupe	12/93-02/98	B234I	110	330003	330434	330137	330244	
2.5 -24 V6	II	07/93-02/98	B258I	125	330364	330434	330116, 330137	330244	
	II Convertible	12/93-02/98	B258I	125	330364	330434	330116, 330137	330244	
	II Coupe	12/93-02/98	B258I	125	330364	330434	330116, 330137	330244	
9000			**09/84 - 12/98**						
2.0 -16	Hatchback	12/85-12/88	B202XI (KAT)	92	330003	330047	330089, 330116, 330184, 330291		
		01/89-01/93	B202I	94	330003	330047	330089, 330116, 330184, 330213		
	Hatchback	12/85-08/88	B202XI	94	330003	330047	330089, 330116, 330184, 330291		
2.0 -16 CD		09/93-12/98	B204I	96	330003	330047	330089, 330133, 330137, 330184, 330213	330244	
		09/93-12/98	B204E	110	330003	330047	330089, 330133, 330137, 330184, 330213	330244	
2.0 -16 CS	Hatchback	01/89-12/98	B202I	94	330003	330047	330089, 330116, 330184, 330213		
	Hatchback	09/93-12/98	B204I	96	330003	330047	330089, 330133, 330137, 330184, 330213	330244	
2.0 -16 ND Turbo	Hatchback	09/93-12/98	B202S, B204E	110	330003	330047	330089, 330133, 330137, 330184, 330213	330244	
2.0 -16 Turbo		05/88-08/93	B202XL	118	330003	330047	330089, 330116, 330121, 330184, 330213, 330291		
	Hatchback	09/84-08/93	B202XL	118	330003	330047	330089, 330116, 330121, 330184, 330213, 330291		
	Hatchback	05/88-08/93	B202XL	120	330003	330047	330089, 330116, 330121, 330184, 330213, 330291		
	Hatchback	06/89-12/92	B202	127	330003	330047	330089, 330116, 330184, 330213		
		04/85-12/91	B202XL	129	330003	330047	330089, 330116, 330121, 330184, 330213, 330291		
	Hatchback	09/84-12/91	B202XL	129	330003	330047	330089, 330116, 330121, 330184, 330213, 330291		

OPS Oil Pressure Switches **BLS** Brake Light Switches **TT-RF** Temperature Transmitter and Radiator Fan Switches **RLS** Reverse Light Switches **VAR** Various

Vehicle		Date	Engine	kW	OPS	BLS	TT-RF	RLS	VAR
2.0 -16 Turbo CD		09/92-12/98	B202S, B204E	108	330003	330047	330089, 330133, 330137, 330184, 330213	330244	
		09/88-08/93	B202XL	120	330003	330047	330089, 330116, 330121, 330184, 330213, 330291		
2.3 -16 Aero CS	Hatchback	02/93-12/98	B234R	162	330003	330047	330089, 330133, 330137, 330184, 330213	330244	
	Hatchback	02/93-12/98	B234R	165	330003	330047	330089, 330133, 330137, 330184, 330213	330244	
2.3 -16 CD		08/89-12/98	B234I	107	330003	330047	330089, 330116, 330133, 330137, 330184, 330213	330244	
2.3 -16 CD Turbo		07/90-12/98	B234L	147	330003	330047	330089, 330116, 330133, 330137, 330184, 330213	330244	
2.3 -16 CDE		09/93-12/98	B234I	108	330003	330047	330089, 330133, 330137, 330184, 330213	330244	
2.3 -16 CDE Eco-Power		09/93-12/98	B234E	125	330003	330047	330089, 330133, 330137, 330184, 330213	330244	
2.3 -16 CS	Hatchback	09/89-12/98	B234I	107	330003	330047	330089, 330116, 330133, 330137, 330184, 330213	330244	
2.3 -16 CSE	Hatchback	09/93-12/98	B234I	108	330003	330047	330089, 330133, 330137, 330184, 330213	330244	
2.3 -16 CSE Eco Power	Hatchback	09/93-12/98	B234E	125	330003	330047	330089, 330133, 330137, 330184, 330213	330244	
2.3 -16 Turbo		09/90-08/93	B234L	143	330003	330047	330089, 330116, 330133, 330184, 330213		
	Hatchback	09/90-12/98	B234L	143	330003	330047	330089, 330116, 330133, 330137, 330184, 330213	330244	
2.3 -16 Turbo CSE	Hatchback	09/93-12/98	B234L	147	330003	330047	330089, 330133, 330137, 330184, 330213	330244	
3.0 -24 V6 CD/CDE		07/94-12/98	B308I	155	330364	330047	330116, 330137	330244	
3.0 -24 V6 CS/CSE	Hatchback	07/94-12/98	B308I	155	330364	330047	330116, 330137	330244	

SCANIA

3 - series 01/88 - 12/96

113 H/310		01/90-12/91	DS 11.34, DS 11.73, DS 11.75, DSC 11.06, DSC 11.08	228				330447	
		05/88-12/89	DS 11.34, DS 11.73, DSC 11.06	228				330447	
113 H/320		01/90-12/96	DSC 11.16, DSC 11.17, DSC 11.21	235				330447	
		05/88-12/89	DSC 11.16	239				330447	

OPS Oil Pressure Switches **BLS** Brake Light Switches **TT-RF** Temperature Transmitter and Radiator Fan Switches **RLS** Reverse Light Switches **VAR** Various

ERA S.p.A. Moncalieri (TO) Italy - tel: +39 011 6891511 - fax: +39 011 6472862 - www.eranet.it

Vehicle		Date	Engine	kW	OPS	BLS	TT-RF	RLS	VAR
113 H/360		01/90-12/96	DSC 11.13, DSC 11.18, DSC 11.23, DSC 11.30	265				330447	
		05/88-12/89	DSC 11.13	267				330447	
113 H/380		01/91-12/96	DSC 11.22, DSC 11.70	280				330447	
113 M/320		05/88-12/89	DSC 11.16	239				330447	
113 M/360		01/90-12/96	DSC 11.13, DSC 11.18, DSC 11.23, DSC 11.30	265				330447	
		05/88-12/89	DSC 11.13	267				330447	
113 M/380		01/91-12/96	DSC 11.22, DSC 11.70	280				330447	
113 M/400		01/92-12/96	DTC 11.01, DTC 11.02	295				330447	
143 E/420		01/91-12/96	DSC 14.08	309				330447	
143 H/400		05/88-12/89	DSC 14.06	297				330447	
		01/90-12/91	DSC 14.06	297				330447	
143 H/420		01/91-12/96	DSC 14.08	309				330447	
143 H/450		05/88-12/89	DSC 14.03	331				330447	
		01/90-12/96	DSC 14.03, DSC 14.10	331				330447	
143 H/470		03/88-12/89	DSC 14.04	346				330447	
		01/90-05/91	DSC 14.04	346				330447	
143 H/500		01/91-12/96	DSC 14.09, DSC 14.16	368				330447	
143 M/420		01/91-12/96	DSC 14.08	309				330447	
143 M/450		05/88-12/89	DSC 14.03	331				330447	
		01/90-12/96	DSC 14.03, DSC 14.10	331				330447	
143 M/470		03/88-12/89	DSC 14.04	346				330447	
		01/90-05/91	DSC 14.04	346				330447	
143 M/500		01/91-12/96	DSC 14.09, DSC 14.16	368				330447	
93 H/250		03/88-12/89	DS 9.05	185				330447	
		01/89-12/89	DS 9.05	185				330447	
93 M/210		03/88-12/91	DS 9.08	155				330447	
93 M/230		03/88-12/89	DS 9.06	167				330447	
		01/90-12/91	DS 9.06	167				330447	
93 M/250		01/90-12/96	DS 9.05, DSC 9.07	185				330447	
		03/88-12/89	DS 9.05	185				330447	
93 M/280		03/88-12/89	DSC 9.02	207				330447	
SEAT									
ALHAMBRA		**04/96 - 03/10**							
1.8 T 20V	(7V8, 7V9)	10/97-03/10	AJH, AWC	110	330318, 330324	330440, 330706, 330725	330103, 330164, 330280, 330497, 330546	330264, 330544, 330579	

SEAT

OPS Oil Pressure Switches **BLS** Brake Light Switches **TT-RF** Temperature Transmitter and Radiator Fan Switches **RLS** Reverse Light Switches **VAR** Various

Vehicle		Date	Engine	kW	OPS	BLS	TT-RF	RLS	VAR
1.9 TDI	(7V8, 7V9)	04/96-03/10	1Z, AHU, ANU	66	330325, 330341, 330342	330440, 330705, 330706, 330725	330103, 330123, 330162, 330163, 330164, 330280, 330287, 330288, 330546	330264, 330544, 330579	
	(7V8, 7V9)	08/96-06/00	AFN, AVG	81	330341, 330342	330440, 330705	330103, 330123, 330162, 330163, 330164, 330280, 330287, 330288, 330546	330544	
	(7V8, 7V9)	06/00-03/10	AUY	85	330325	330706, 330725	330103, 330141, 330280, 330496, 330546	330264, 330544, 330579	
	(7V8, 7V9)	11/02-11/08	ASZ	96	330325		330103, 330280, 330546	330264, 330544, 330579	
	(7V8, 7V9)	05/05-05/07	ARL	110			330103, 330280, 330546	330264, 330544, 330579	
1.9 TDI 4motion	(7V8, 7V9)	06/00-03/10	AUY, BVK	85	330325	330706, 330725	330103, 330280, 330546	330264, 330544, 330579	
1.9 Tdi 4x4	(7V8, 7V9)	06/05-11/08	ASZ	96	330325		330103, 330280, 330546	330264, 330544, 330579	
2.0 i	(7V8, 7V9)	04/96-03/10	ADY, ATM	85	330318, 330324, 330326, 330337, 330342	330440, 330706, 330725	330103, 330123, 330162, 330280, 330287, 330288, 330546	330264, 330544, 330579	
2.0 TDI	(7V8, 7V9)	11/05-03/10	BRT	103			330103, 330280, 330546	330264, 330544, 330579	
2.8 V6	(7V8, 7V9)	06/00-03/10	AYL	150	330324	330706, 330725	330103, 330280, 330546	330264, 330544, 330579	
2.8 V6 4motion	(7V8, 7V9)	06/00-03/10	AYL	150	330324	330706, 330725	330103, 330280, 330546	330264, 330544, 330579	
ALTEA			**03/04 -**						
1.2 TSI	(5P1)	04/10-	CBZB	77				330579	
1.4 16V	(5P1)	05/06-	BXW	63	330320	330503, 330725	330230, 330546	330264, 330579	
1.4 TSI	(5P1)	11/07-	CAXC	92	330320		330546	330264, 330579	
1.6	(5P1)	03/04-	BGU, BSE, BSF	75	330324	330503, 330545	330546	330264, 330579	
1.6 LPG	(5P1)	09/09-	CHGA	75				330579	
1.6 TDI	(5P1)	10/09-	CAYC	77				330579	
1.8 TFSI	(5P1)	01/07-	BYT	118	330324		330546	330264, 330579	
1.9 TDI	(5P1)	08/09-	BXF	66				330579	
	(5P1)	04/04-	BJB, BKC, BLS, BXE	77	330325	330503, 330545	330546	330264, 330579	
2.0 FSI	(5P1)	05/04-03/09	BLR, BLY, BVY, BVZ	110		330503, 330545	330546	330264, 330579	
2.0 TDI	(5P1)	03/04-05/09	AZV	100	330325	330503, 330545	330546	330264, 330579	
	(5P1)	11/05-	BMM	103		330503, 330545	330546	330264, 330579	
	(5P1)	03/06-	BMN	125	330325	330503, 330545	330546	330264, 330579	
2.0 TDI 16V	(5P1)	03/04-	BKD	103	330325	330503, 330545	330546	330264, 330579	
2.0 TFSI	(5P1)	04/06-05/09	BWA	147		330503, 330545	330546	330264, 330579	
ALTEA XL			**10/06 -**						
1.2 TSI	(5P5, 5P8)	04/10-	CBZB	77				330579	

OPS Oil Pressure Switches **BLS** Brake Light Switches **TT-RF** Temperature Transmitter and Radiator Fan Switches **RLS** Reverse Light Switches **VAR** Various

ERA S.p.A. Moncalieri (TO) Italy - tel: +39 011 6891511 - fax: +39 011 6472862 - www.eranet.it

Vehicle		Date	Engine	kW	OPS	BLS	TT-RF	RLS	VAR
1.4 16V	(5P5, 5P8)	10/06-	BXW	63	330320	330725	330230, 330546	330264, 330579	
1.4 TSI	(5P5, 5P8)	11/07-	CAXC	92	330320		330546	330264, 330579	
1.6	(5P5, 5P8)	10/06-	BSE, BSF	75	330324	330503, 330545	330546	330264, 330579	
1.6 LPG	(5P5, 5P8)	09/09-	CHGA	75				330579	
1.6 Multifuel	(5P5, 5P8)	10/06-	CCSA	75				330579	
1.6 TDI	(5P5, 5P8)	10/09-	CAYC	77				330579	
1.8 TFSI	(5P5, 5P8)	01/07-	BYT	118	330324		330546	330264, 330579	
1.9 TDI	(5P5, 5P8)	08/09-	BXF	66				330579	
	(5P5, 5P8)	10/06-	BLS, BXE	77	330325	330503, 330545	330546	330264, 330579	
2.0 FSI	(5P5, 5P8)	10/06-03/09	BVY, BVZ	110		330503, 330545	330546	330264, 330579	
2.0 TDI	(5P5, 5P8)	11/06-03/09	AZV	100				330579	
	(5P5, 5P8)	10/06-	BMM	103		330503, 330545	330546	330264, 330579	
	(5P5, 5P8)	06/07-	BMN	125	330325	330503, 330545	330546	330264, 330579	
2.0 TDI 4x4	(5P5, 5P8)	06/07-	BMM	103		330503, 330545	330546	330264, 330579	
2.0 TDI 16V	(5P5, 5P8)	10/06-	BKD	103	330325	330503, 330545	330546	330264, 330579	
2.0 TDI 4x4	(5P5, 5P8)	06/07-	BMN	125	330325	330503, 330545	330546	330264, 330579	
2.0 TFSI 4x4	(5P5, 5P8)	06/07-05/09	BWA	147		330503, 330545	330546	330264, 330579	
AROSA			**05/97 - 06/04**						
1.0	(6H)	05/97-06/04	AER, ALD, ALL, ANV, AUC	37	330319, 330320, 330367	330440, 330545	330141, 330161, 330280, 330282, 330287, 330496	330264, 330265, 330442	
1.4	(6H)	05/97-06/04	AEX, AKK, AKV, ANW, APQ, AUD	44	330319, 330320	330440, 330545	330141, 330161, 330280, 330282, 330287, 330496, 330497	330264, 330265, 330442	
1.4 16V	(6H)	01/00-06/04	AFK, AQQ, AUB	74	330320	330440, 330545	330141, 330161, 330280, 330282, 330496, 330497	330264, 330265, 330442	
1.4 TDI	(6H)	01/00-06/04	AMF	55	330325	330440, 330545, 330706, 330725	330141, 330161, 330199, 330280, 330496	330264, 330265, 330442	
1.7 SDI	(6H)	08/97-06/04	AKU	44	330325	330440, 330545, 330706, 330725	330161, 330280, 330282, 330287	330264, 330265, 330442	
CORDOBA			**02/93 - 11/09**						
1.0	Hatchback (6K2)	06/99-10/02	ALD, ANV, AUC	37	330320	330072	330123, 330280, 330287, 330546	330264, 330442, 330544	
		05/00-09/02	AVZ	51	330320	330072	330123, 330141, 330280, 330287	330264, 330442, 330544	
1.0 16V	Hatchback (6K2)	05/00-10/02	AST, AVZ	51	330320	330072	330123, 330141, 330280, 330287	330264, 330442, 330544	
1.0 CL	(6K2/C2)	02/93-06/96	AAU	33	330322, 330342	330072	330103, 330162, 330286	330255, 330442	
1.0 i	(6K2/C2)	09/96-06/99	AER	37	330342	330072	330161, 330162, 330164, 330286, 330287	330442	
1.2	(6L2)	10/02-06/06	AZQ	47	330320	330503, 330725	330199, 330230, 330546	330264, 330579	
1.2 12V	(6L2)	05/06-11/09	BXV	51	330320	330503, 330725	330199, 330230, 330546	330264, 330579	

OPS Oil Pressure Switches **BLS** Brake Light Switches **TT-RF** Temperature Transmitter and Radiator Fan Switches **RLS** Reverse Light Switches **VAR** Various

Vehicle		Date	Engine	kW	OPS	BLS	TT-RF	RLS	VAR
1.3	(6K2/C2)	02/93-08/94	AAV	40	330322, 330342	330072	330103, 330162, 330286	330255, 330442	
1.4	Hatchback (6K2)	06/99-10/02	AKK, ANW, AUD	44	330320	330072	330123, 330280, 330287, 330497	330264, 330442, 330544	
	Vario (6K5)	06/99-12/02	AKK, ANW, AUD	44	330320	330072	330123, 330280, 330287, 330497	330264, 330442, 330544	
1.4 16V	(6L2)	09/02-12/07	BBY	55	330320	330503, 330725	330199, 330230, 330546	330264, 330579	
	Hatchback (6K2)	05/00-10/02	APE, AUA	55	330320	330072	330123, 330141, 330280, 330287, 330496, 330497	330264, 330442, 330544	
	Vario (6K5)	06/99-12/02	APE	55	330320	330072	330123, 330141, 330280, 330287, 330496, 330497	330264, 330442, 330544	
	(6L2)	05/06-11/09	BXW	63		330503, 330725	330199, 330230, 330546	330264, 330579	
	(6L2)	10/02-11/09	AUB	74	330320	330503, 330725	330199, 330230, 330546	330264, 330579	
	Hatchback (6K2)	02/00-10/02	AQQ, AUB	74	330320	330072	330123, 330141, 330199, 330230, 330280, 330287, 330496, 330497	330264, 330442, 330544	
1.4 i	(6K2/C2)	06/94-06/99	ABD, AEX, AKV, ANX, APQ	44	330318, 330342	330072, 330440	330123, 330161, 330162, 330164, 330281, 330286, 330287, 330296	330255, 330442	
	Vario (6K5)	09/96-06/99	AEX, AKV, ANX, APQ	44	330318, 330342	330072	330123, 330161, 330162, 330164, 330281, 330286, 330287, 330296	330255, 330442	
1.4 i 16V	(6K2/C2)	09/96-06/99	AFH	74	330342	330072	330161, 330162, 330164, 330286, 330287	330442	
1.4 TDI	(6L2)	05/05-11/09	BNM	51	330325	330503, 330725	330199, 330230, 330546	330264, 330579	
	(6L2)	10/02-12/05	AMF	55	330325	330503, 330725	330199, 330230, 330546	330264, 330579	
	(6L2)	06/05-11/09	BMS, BNV	59	330325	330503, 330725	330199, 330230, 330546	330264, 330579	
1.6	Hatchback (6K2)	06/99-10/02	ALM	55	330342	330072	330123, 330141, 330280, 330287, 330496	330264, 330442, 330544	
	Vario (6K5)	06/99-12/02	ALM	55	330342	330072	330123, 330141, 330280, 330287, 330496	330264, 330442, 330544	
	(6L2)	04/03-11/09	BAH	74	330320	330503, 330725	330199, 330230, 330546	330264, 330579	
	Hatchback (6K2)	06/99-10/02	AEH, AKL, APF, AUR	74	330324	330072	330123, 330141, 330280, 330496, 330497	330264, 330442, 330544	
	Vario (6K5)	06/99-12/02	AEH, AKL, APF, AUR	74	330324	330072	330123, 330141, 330280, 330496, 330497	330264, 330442, 330544	
1.6 16V	(6L2)	11/06-11/09	BTS	77		330503, 330725	330199, 330230, 330546	330264, 330579	

OPS Oil Pressure Switches **BLS** Brake Light Switches **TT-RF** Temperature Transmitter and Radiator Fan Switches **RLS** Reverse Light Switches **VAR** Various

ERA S.p.A. Moncalieri (TO) Italy - tel: +39 011 6891511 - fax: +39 011 6472862 - www.eranet.it

Vehicle		Date	Engine	kW	OPS	BLS	TT-RF	RLS	VAR
1.6 i	(6K2/C2)	02/93-06/99	ABU, AEE, ALM	55	330322, 330341, 330342	330072, 330440	330123, 330141, 330161, 330162, 330164, 330280, 330281, 330286, 330287, 330296	330255, 330264, 330442, 330544	
	(6K2/C2)	05/94-06/99	1F	55	330342	330072, 330440	330123, 330161, 330162, 330164, 330281, 330286, 330287, 330296, 330646	330255, 330442	
	Vario (6K5)	09/96-06/99	AEE, ALM	55	330342	330072	330123, 330141, 330161, 330162, 330164, 330280, 330286, 330287	330264, 330442, 330544	
	Vario (6K5)	05/97-06/99	1F	55	330342	330072, 330440	330123, 330161, 330162, 330164, 330281, 330286, 330287, 330296, 330646	330255, 330442	
	(6K2/C2)	07/96-10/99	AFT	74	330318, 330326, 330337, 330342	330072, 330440	330123, 330161, 330162, 330164, 330281, 330286, 330287, 330296	330255, 330442	
	Hatchback	07/96-06/99	AFT	74	330318, 330326, 330337, 330342	330072, 330440	330123, 330161, 330162, 330164, 330281, 330286, 330287, 330296	330255, 330442	
	Vario (6K5)	09/96-06/99	AFT	74	330318, 330326, 330337, 330342	330072, 330440	330123, 330161, 330162, 330164, 330281, 330286, 330287, 330296	330255, 330442	
1.8		12/99-09/02	AQX	115				330744	
1.8 i	(6K2/C2)	02/93-06/99	ABS, ACC	66	330337, 330342	330072, 330440	330123, 330161, 330162, 330163, 330164, 330281, 330286, 330287, 330296	330255, 330442	
1.8 i 16V	(6K2/C2)	10/93-08/96	ADL	95	330342	330072, 330440	330123, 330127, 330161, 330162, 330163, 330281, 330284, 330286, 330287, 330296	330255, 330442	
1.8 T 20V Cupra	Hatchback (6K2)	07/00-10/02	AQX, AYP	115	330324	330072	330123, 330141	330544, 330744	
1.9 D	(6K2/C2)	01/96-08/96	1Y	47	330321, 330325, 330341, 330342	330072	330123, 330128, 330164, 330281, 330296	330442, 330744	
	(6K2/C2)	02/93-08/96	1Y	50	330341, 330342	330072	330123, 330128, 330161, 330163, 330164	330442, 330744	
		05/99-09/02	ALH	66				330744	
	Hatchback	07/96-04/99	1Z	66				330744	
		05/99-09/02	ASV	81				330744	
1.9 SDI	(6K2/C2)	08/96-06/99	AEY	47	330318, 330321, 330325, 330341, 330342	330072	330123, 330161, 330281, 330286, 330296	330442, 330744	
	(6L2)	09/02-11/09	ASY	47	330325	330503, 330725	330199, 330230, 330546	330264, 330579	

OPS Oil Pressure Switches **BLS** Brake Light Switches **TT-RF** Temperature Transmitter and Radiator Fan Switches **RLS** Reverse Light Switches **VAR** Various

Vehicle		Date	Engine	kW	OPS	BLS	TT-RF	RLS	VAR
1.9 SDI	Vario (6K5)	09/96-06/99	AEY	47	330318, 330321, 330325, 330341, 330342	330072	330123, 330161, 330281, 330286, 330296	330442, 330744	
	Hatchback (6K2)	06/99-10/02	AGP, AQM	50	330325	330072	330123, 330141, 330280, 330496, 330497	330264, 330442, 330544	
	Vario (6K5)	06/99-12/02	AGP, AQM	50	330325	330072	330123, 330141, 330280, 330496, 330497	330264, 330442, 330544	
1.9 TD	(6K2/C2)	02/93-08/96	AAZ	55	330321, 330325, 330341, 330342	330072, 330440	330123, 330128, 330161, 330163, 330164, 330281, 330296	330442, 330744	
1.9 TDI	(6K2/C2)	08/96-06/99	1Z, AHU	66	330318, 330321, 330325, 330341, 330342	330072	330123, 330161	330744	
	Hatchback (6K2)	06/99-10/02	AGR, ALH	66	330325	330072	330123, 330141, 330280, 330496, 330497	330544, 330744	
	Vario (6K5)	08/96-06/99	1Z, AHU	66	330318, 330321, 330325, 330341, 330342	330072	330123, 330161	330744	
	Vario (6K5)	06/99-12/02	AGR, ALH	66	330325	330072	330123, 330141, 330280, 330496, 330497	330544, 330744	
	(6L2)	09/02-11/09	ATD	74	330325	330503, 330725	330199, 330230, 330546	330264, 330579	
	(6K2/C2)	03/97-06/99	AFN	81	330318, 330321, 330325, 330341, 330342	330072	330123, 330161	330744	
	Hatchback (6K2)	06/99-10/02	ASK, ASV	81	330325	330072	330123, 330141, 330280, 330496, 330497	330544, 330744	
	Vario (6K5)	07/97-06/99	AFN	81	330318, 330321, 330325, 330341, 330342	330072	330123, 330161	330744	
	Vario (6K5)	06/99-12/02	ASK, ASV	81	330325	330072	330123, 330141, 330280, 330496, 330497	330544, 330744	
	(6L2)	10/02-11/09	ASZ	96	330325	330503, 330725	330199, 330230, 330546	330264, 330579	
2.0	(6L2)	09/02-11/09	AZL, BBX	85	330324	330503, 330725	330199, 330230, 330546	330264, 330579	
	Hatchback	11/95-04/99	2E, AGG	85	330318, 330326, 330337, 330342	330072, 330440	330123, 330161, 330162, 330163, 330164, 330281, 330286, 330287, 330296	330255, 330442	
	Hatchback	07/96-04/99	ABF	110				330744	
2.0 i	(6K2/C2)	02/93-06/99	2E, AGG	85	330318, 330326, 330337, 330342, 330370	330072, 330440	330123, 330161, 330162, 330163, 330164, 330281, 330286, 330287, 330296	330255, 330442	

OPS Oil Pressure Switches **BLS** Brake Light Switches **TT-RF** Temperature Transmitter and Radiator Fan Switches **RLS** Reverse Light Switches **VAR** Various

ERA S.p.A. Moncalieri (TO) Italy - tel: +39 011 6891511 - fax: +39 011 6472862 - www.eranet.it

Vehicle		Date	Engine	kW	OPS	BLS	TT-RF	RLS	VAR
2.0 i 16V	(6K2/C2)	08/96-06/99	ABF	110	330318, 330342, 330370	330072	330123, 330127, 330161, 330162, 330163, 330164, 330284, 330286, 330287	330255, 330442, 330744	
EXEO			**12/08 -**						
1.6	(3R2)	03/09-	ALZ	75		330725		330748	
	ST (3R5)	06/09-	ALZ	75		330725		330748	
1.8 T	(3R2)	12/08-	CFMA	110		330725		330748	
	ST (3R5)	06/09-	CFMA	110		330725		330748	
2.0 TDI	(3R2)	12/08-	CAGC	88		330725		330748	
	ST (3R5)	08/09-	CAGC	88		330725		330748	
	(3R2)	03/09-	CAGA	105		330725		330748	
	ST (3R5)	06/09-	CAGA	105		330725		330748	
	(3R2)	03/09-	CAHA	125		330725		330748	
	ST (3R5)	06/09-	CAHA	125		330725		330748	
2.0 TFSI	(3R2)	03/09-	BWE	147		330725		330748	
	ST (3R5)	06/09-	BWE	147		330725		330748	
FURA			**01/82 - 12/86**						
0.9	(025A)	01/82-06/86	--	33	330001	330032	330082, 330484	330335	
IBIZA			**06/84 -**						
	I (021A)	08/90-05/93	09 NCA, 146 A 000	29	330001	330056	330175		
	I (021A)	08/86-05/93	146 A 000	32	330001	330056	330175		
1.0	II (6K1)	03/93-09/96	AAU	33	330322, 330342	330072, 330440	330103, 330281, 330286, 330296	330255, 330442	
	III (6K1)	08/99-02/02	ALD, ANV, AUC	37	330320	330072	330123, 330280, 330287, 330546	330264, 330442	
1.0 16V	III (6K1)	10/99-02/02	AST, AVZ	51	330321	330072	330123, 330141, 330280, 330287	330264, 330442	
1.0 i	II (6K1)	09/96-08/99	AER	37	330342	330072	330161, 330162, 330164, 330280, 330286, 330287	330442, 330744	
1.2	IV (6L1)	06/07-05/08	BBM	44		330725		330579	
	V SPORTCOUPE (6J1)	07/09-	CGPB, CHFA	44		330725		330579	
	V ST (6J8)	05/10-	CGPB	44		330725		330579	
	I (021A)	11/84-12/93	021 A 1000	47	330000, 330001	330056	330083, 330175		
	IV (6L1)	02/02-06/06	AZQ	47	330320	330503, 330725	330199, 330230, 330546	330264, 330579	
	V (6J5)	03/08-	BZG	51	330320	330503, 330725	330199, 330230, 330546	330264, 330579	
	V SPORTCOUPE (6J1)	07/08-	BZG	51	330320	330503, 330725	330199, 330230, 330546	330264, 330579	
	V ST (6J8)	05/10-	CGPA	51		330725		330579	
1.2 12V	IV (6L1)	05/06-11/09	BXV	51	330320	330503, 330725	330199, 330230, 330546	330264, 330579	
1.2 i	I (021A)	01/89-05/93	021 C.1000	52	330000	330056	330083, 330175		

OPS Oil Pressure Switches **BLS** Brake Light Switches **TT-RF** Temperature Transmitter and Radiator Fan Switches **RLS** Reverse Light Switches **VAR** Various

Vehicle		Date	Engine	kW	OPS	BLS	TT-RF	RLS	VAR
1.2 TDI	V (6J5)	05/10-	CFWA	55		330725			
	V ST (6J8)	04/10-	CFWA	55		330725			
1.2 TSI	V (6J5)	09/10-	CBZB	77		330725			
	V SPORTCOUPE (6J1)	09/10-	CBZB	77		330725			
	V ST (6J8)	09/10-	CBZB	77		330725			
1.3 i	II (6K1)	03/93-08/99	AAV	40	330322, 330342	330072	330103, 330281, 330286, 330296	330255, 330442	
1.4	III (6K1)	08/99-02/02	AKK, ANW, AUD	44	330320	330072	330123, 330280, 330287, 330497	330264, 330442	
	V (6J5)	03/08-	BXW	63	330320	330503, 330725	330199, 330230, 330546	330264, 330579	
	V SPORTCOUPE (6J1)	07/08-	BXW	63	330320	330503, 330725	330199, 330230, 330546	330264, 330579	
	V ST (6J8)	03/10-	CGGB	63		330725		330579	
1.4 16V	III (6K1)	05/00-02/02	APE, AUA	55	330320	330072	330123, 330141, 330280, 330287, 330496, 330497	330264, 330442	
	IV (6L1)	02/02-12/07	BBY	55	330320	330503, 330725	330199, 330230, 330546	330264, 330579	
	IV (6L1)	05/06-11/09	BXW	63	330320	330503, 330725	330199, 330230, 330546	330264, 330579	
	III (6K1)	08/99-02/02	AQQ, AUB	74	330320	330072	330123, 330141, 330280, 330287, 330496, 330497	330264, 330442	
	IV (6L1)	02/02-11/09	AUB, BBZ	74	330320	330503, 330725	330199, 330230, 330546	330264, 330579	
1.4 i	II (6K1)	09/93-08/99	ABD, AEX, AKV, APQ	44	330318, 330341, 330342	330072, 330440	330123, 330161, 330162, 330164, 330280, 330281, 330286, 330287, 330296	330255, 330442, 330744	
1.4 i 16V	II (6K1)	06/97-08/99	AFH	74	330342	330072	330161, 330162, 330164, 330280, 330286, 330287	330442, 330744	
1.4 TDI	IV (6L1)	05/05-11/09	BNM	51	330325	330503, 330725	330199, 330230, 330546	330264, 330579	
	IV (6L1)	05/02-12/05	AMF	55	330325	330503, 330725	330199, 330230, 330546	330264, 330579	
	IV (6L1)	06/05-11/09	BMS, BNV	59	330325	330503, 330725	330199, 330230, 330546	330264, 330579	
	V (6J5)	07/08-	BMS	59	330325	330503, 330725	330199, 330230, 330546	330264, 330579	
	V SPORTCOUPE (6J1)	07/08-	BMS	59	330325	330503, 330725	330199, 330230, 330546	330264, 330579	
1.5 i	I (021A)	10/86-05/93	021 B.2000	74	330000	330056	330083, 330175		
1.6	III (6K1)	08/99-02/02	ALM	55	330342	330072	330123, 330141, 330280, 330287, 330496	330264, 330442	
	III (6K1)	08/99-02/02	AEH, AKL, APF, AUR	74	330320, 330324	330072	330123, 330141, 330280, 330496, 330497	330264, 330442	
	IV (6L1)	02/03-11/09	BAH	74	330320	330503, 330725	330199, 330230, 330546	330264, 330579	
	V (6J5)	05/08-	BTS	77		330725		330579	

OPS Oil Pressure Switches **BLS** Brake Light Switches **TT-RF** Temperature Transmitter and Radiator Fan Switches **RLS** Reverse Light Switches **VAR** Various

Vehicle		Date	Engine	kW	OPS	BLS	TT-RF	RLS	VAR
1.6	V SPORTCOUPE (6J1)	07/08-	BTS	77		330725		330579	
1.6 16V	IV (6L1)	11/06-11/09	BTS	77	330320	330503, 330725	330199, 330230, 330546	330264, 330579	
1.6 i	II (6K1)	03/93-08/99	ABU, AEE, ALM	55	330322, 330341, 330342	330072, 330440	330123, 330161, 330162, 330164, 330280, 330281, 330286, 330287, 330296	330255, 330442, 330744	
	II (6K1)	09/94-06/99	1F	55	330342	330072, 330440	330123, 330161, 330162, 330164, 330280, 330281, 330286, 330287, 330296, 330646	330255, 330442, 330744	
	II (6K1)	04/96-08/99	AFT	74	330318, 330326, 330337, 330342	330072	330123, 330161, 330162, 330164, 330280, 330286, 330287	330442, 330744	
1.6 TDI	V (6J5)	05/09-	CAYB	66		330725			
	V SPORTCOUPE (6J1)	05/09-	CAYB	66		330725			
	V ST (6J8)	03/10-	CAYB	66		330725			
	V (6J5)	05/09-	CAYC	77		330725			
	V SPORTCOUPE (6J1)	05/09-	CAYC	77		330725			
	V ST (6J8)	03/10-	CAYC, CLNA	77		330725			
1.8	IV (6L1)	05/04-	BBU	132	330320, 330324	330503	330199, 330230, 330546	330264	
1.8 i	II (6K1)	03/93-08/99	ABS, ADZ	66	330337, 330342	330072, 330440	330123, 330161, 330162, 330163, 330164, 330280, 330281, 330286, 330287, 330296	330255, 330442, 330744	
1.8 i 16V	II (6K1)	11/93-08/96	ADL	95	330342	330072, 330440	330123, 330127, 330161, 330162, 330163, 330281, 330284, 330286, 330287, 330296	330255, 330442	
1.8 T 20V Cupra	III (6K1)	07/00-02/02	AQX, AYP	115	330320	330072	330123, 330141, 330280, 330496	330744	
1.8 T Cupra R	IV (6L1)	01/04-02/08	BBU	132	330320, 330324	330503, 330725	330199, 330230, 330546	330264, 330579	
1.8 T FR	IV (6L1)	12/03-05/08	BJX, BKV	110	330320, 330324	330503, 330725	330199, 330230, 330546	330264, 330579	
1.9 D	II (6K1)	04/93-08/96	1Y	47	330341, 330342	330072, 330440	330123, 330128, 330161, 330163, 330164, 330281, 330296	330442	
	II (6K1)	10/94-08/96	1Y	50	330341, 330342	330072	330123, 330128, 330164, 330280	330442	
1.9 SDI	II (6K1)	08/96-08/99	AEY	47	330318, 330325, 330341, 330342	330072	330123, 330128, 330161, 330162, 330164, 330280, 330286	330744	
	IV (6L1)	02/02-12/05	ASY	47	330325	330503, 330725	330199, 330230, 330546	330264, 330579	
	III (6K1)	08/99-02/02	AGP, AQM	50	330325	330072	330123, 330141, 330280, 330496, 330497	330264, 330442	

OPS Oil Pressure Switches **BLS** Brake Light Switches **TT-RF** Temperature Transmitter and Radiator Fan Switches **RLS** Reverse Light Switches **VAR** Various

Vehicle		Date	Engine	kW	OPS	BLS	TT-RF	RLS	VAR
1.9 TD	II (6K1)	03/93-08/96	AAZ	55	330341, 330342	330072, 330440	330123, 330128, 330161, 330163, 330164, 330280, 330281, 330296	330442	
1.9 TDI	II (6K1)	08/96-08/99	1Z, AHU	66	330318, 330321, 330341, 330342	330072	330123, 330128, 330161, 330162, 330164, 330280	330744	
	III (6K1)	08/99-02/02	AGR, ALH	66	330325	330072	330123, 330141, 330280, 330496, 330497	330744	
	V (6J5)	07/08-	BXJ	66	330325	330503, 330725	330199, 330230, 330546	330264	
	V SPORTCOUPE (6J1)	07/08-	BXJ	66	330325	330503, 330725	330199, 330230, 330546	330264	
	IV (6L1)	02/02-11/09	ATD	74	330325	330503, 330725	330199, 330230, 330546	330264, 330579	
	V (6J5)	03/08-	BLS	77	330325	330503, 330725	330199, 330230, 330546	330264, 330579	
	V SPORTCOUPE (6J1)	07/08-	BLS	77	330325	330503, 330725	330199, 330230, 330546	330264, 330579	
	II (6K1)	02/97-08/99	AFN	81	330318, 330321, 330341, 330342	330072	330123, 330128, 330161, 330162, 330164, 330280	330744	
	III (6K1)	08/99-02/02	ASK, ASV	81	330325	330072	330123, 330141, 330280, 330496, 330497	330744	
	IV (6L1)	02/02-11/09	ASZ	96	330325	330503, 330725	330199, 330230, 330546	330264, 330579	
1.9 TDI Cupra R	IV (6L1)	03/04-02/08	BPX	118	330325	330503, 330725	330199, 330230, 330546	330264, 330579	
2.0	III (6K1)	04/02-	AZL	85	330324	330503	330199, 330230, 330546	330264, 330579	
	IV (6L1)	04/02-11/09	AZL	85	330324	330503, 330725	330199, 330230, 330546	330264, 330579	
	V (6J5)	10/08-	CEKA	85		330725		330579	
	V SPORTCOUPE (6J1)	10/08-	CEKA	85		330725		330579	
2.0 i	II (6K1)	03/93-08/99	2E, AGG	85	330318, 330326, 330337, 330342, 330370	330072, 330440	330123, 330161, 330162, 330163, 330164, 330280, 330281, 330286, 330287, 330296	330255, 330442, 330744	
2.0 i 16V	II (6K1)	08/96-08/99	ABF	110	330318, 330337, 330342	330072	330123, 330127, 330161, 330162, 330163, 330164, 330280, 330284, 330286, 330287	330442, 330744	
2.0 TDI	V (6J5)	01/10-	CFHD	105		330725		330579	
	V SPORTCOUPE (6J1)	01/10-	CFHD	105		330725		330579	
INCA			**11/95 - 06/03**						
1.4 16V	(6K9)	04/00-06/03	AUA	55	330320	330072	330141, 330161, 330162, 330280, 330286, 330287	330255, 330442, 330544	
1.4 i	(6K9)	11/95-06/03	AEX, AKV, APQ, AUD	44	330318, 330320, 330342	330072	330141, 330161, 330162, 330280, 330286, 330287	330255, 330442, 330544	

OPS Oil Pressure Switches **BLS** Brake Light Switches **TT-RF** Temperature Transmitter and Radiator Fan Switches **RLS** Reverse Light Switches **VAR** Various

ERA S.p.A. Moncalieri (TO) Italy - tel: +39 011 6891511 - fax: +39 011 6472862 - www.eranet.it

Vehicle		Date	Engine	kW	OPS	BLS	TT-RF	RLS	VAR
1.6 i	(6K9)	11/95-05/98	1F	55	330342	330072	330161, 330162, 330280, 330286, 330287, 330296	330255, 330442, 330544	
	(6K9)	06/97-09/00	ALM	55	330342	330072	330161, 330162, 330280, 330286, 330287, 330646	330255, 330442, 330544	
1.7 D	(6K9)	09/96-06/03	AHB	42	330318, 330325, 330342	330072	330123, 330128, 330280	330442, 330544, 330744	
1.9 D	(6K9)	11/95-06/03	1Y	47	330321, 330342	330072	330123, 330128, 330280, 330296	330442, 330544	
1.9 SDI	(6K9)	11/95-06/03	AEY, AYQ	47	330318, 330325, 330342	330072	330123, 330128, 330141, 330280, 330296	330442, 330544, 330744	
LEON			**11/99 -**						
1.2 TSI	(1P1)	02/10-	CBZB	77				330579	
1.4 16V	(1M1)	11/99-06/06	AHW, APE, AUA, AXP	55	330320	330440, 330725	330141, 330161, 330199, 330230, 330280, 330282, 330496	330264, 330579, 330744	
	(1P1)	06/06-	BXW	63	330320	330503, 330545	330230, 330546	330264, 330579, 330744	
1.4 TSI	(1P1)	11/07-	CAXC	92	330320	330503, 330545	330546	330264, 330579, 330744	
1.6	(1M1)	11/99-06/06	AKL, APF	74	330324	330440, 330706, 330725	330141, 330161, 330199, 330230, 330280, 330282, 330496	330264, 330579, 330744	
	(1M1)	10/05-06/06	BGU	75		330725		330579, 330744	
	(1P1)	07/05-	BSE, BSF	75	330324	330503, 330545	330546	330264, 330579, 330744	
1.6 16 V	(1M1)	09/00-06/06	ATN, AUS, AZD	77	330320	330440, 330725	330141, 330161, 330199, 330230, 330280, 330282	330264, 330579, 330744	
1.6 LPG	(1P1)	12/09-	CHGA	75				330579	
1.8 20V	(1M1)	11/99-06/06	AGN, APG	92	330324	330440, 330706, 330725	330141, 330161, 330199, 330230, 330280, 330282, 330496	330264, 330579, 330744	
1.8 20V T	(1M1)	11/99-06/06	APP, AUQ	132	330324	330440, 330725	330141, 330161, 330199, 330230, 330280, 330282, 330496	330264, 330579, 330744	
1.8 20V T 4	(1M1)	11/99-06/06	AJQ, ARY	132	330324	330440, 330725	330141, 330161, 330199, 330230, 330280, 330282	330264, 330579, 330744	
1.8 T 20V	(1P1)	09/05-	BAM	165	330324		330141, 330199, 330230, 330280, 330282	330264	
1.8 T Cupra R	(1M1)	02/02-06/06	AMK	154	330324	330725	330141, 330199, 330230, 330280, 330282	330264, 330579, 330744	
	(1M1)	07/03-06/06	BAM	165	330324	330725	330141, 330199, 330230, 330280, 330282	330264, 330579, 330744	
1.8 TSI	(1P1)	06/07-	BZB	118	330324	330503, 330545	330546	330264, 330579, 330744	

OPS Oil Pressure Switches **BLS** Brake Light Switches **TT-RF** Temperature Transmitter and Radiator Fan Switches **RLS** Reverse Light Switches **VAR** Various

Vehicle		Date	Engine	kW	OPS	BLS	TT-RF	RLS	VAR
1.8 Turbo 4x4	(1M1)	05/02-05/03	AMK	154	330324	330725	330141, 330199, 330230, 330280, 330282	330264, 330579, 330744	
	(1P1)	05/02-05/03	--	154	330324		330141, 330199, 330230, 330280, 330282	330264	
1.9 SDI	(1M1)	11/99-06/06	AQM	50	330325	330440, 330725	330141, 330161, 330199, 330230, 330280, 330282	330264, 330579, 330744	
1.9 TDI	(1M1)	11/99-06/06	AGR, ALH	66	330325	330440, 330706, 330725	330141, 330161, 330199, 330230, 330280, 330282, 330496	330264, 330579, 330744	
	(1P1)	06/07-	BXF	66	330325	330503, 330545	330546	330264, 330579, 330744	
	(1M1)	10/05-06/06	AXR	74	330325	330725	330141, 330199, 330230, 330280, 330282	330264, 330579, 330744	
	(1P1)	07/05-	BKC, BLS	77	330325	330503, 330545	330546	330264, 330579, 330744	
	(1M1)	11/99-06/06	AHF, ASV	81	330325	330440, 330706, 330725	330141, 330161, 330199, 330230, 330280, 330282, 330496	330264, 330579, 330744	
	(1M1)	05/03-06/06	ASZ	96	330325	330725	330141, 330199, 330230, 330280, 330282	330264, 330579, 330744	
	(1M1)	02/01-06/06	ARL	110	330325	330440, 330725	330141, 330161, 330199, 330230, 330280, 330282	330264, 330579, 330744	
1.9 TDI Syncro	(1M1)	05/02-06/06	ARL	110	330325	330440, 330725	330141, 330161, 330199, 330230, 330280, 330282	330264, 330579, 330744	
2.0 FSI	(1P1)	07/05-05/10	BLR, BLY, BVY, BVZ	110		330503, 330545	330546	330264, 330579, 330744	
2.0 TDI	(1P1)	07/05-05/10	AZV	100	330325	330503, 330545	330546	330264, 330579, 330744	
	(1P1)	10/05-	BMM	103		330503, 330545	330546	330264, 330579, 330744	
	(1P1)	05/06-	BMN	125	330325	330503, 330545	330546	330264, 330579, 330744	
2.0 TDI 16V	(1P1)	07/05-	BKD	103	330325	330503, 330545	330546	330264, 330579, 330744	
2.0 TFSI	(1P1)	05/05-03/09	BWA	147		330503, 330545	330546	330264, 330579, 330744	
	(1P1)	06/09-	CCZB	155				330579	
	(1P1)	11/06-	BWJ	177		330503, 330545	330546	330264, 330579, 330744	
	(1P1)	09/09-	CDLA	195				330579	
2.3 VR5	(1M1)	09/00-11/03	AQN	125	330324	330440, 330725	330123, 330141, 330199, 330230, 330280, 330282	330264, 330579, 330744	
	(1P1)	09/00-11/03	--	125	330324	330440	330123, 330141, 330199, 330230, 330280, 330282	330264	
2.8	(1M1)	05/02-06/04	BDE	150		330725		330579, 330744	

OPS Oil Pressure Switches **BLS** Brake Light Switches **TT-RF** Temperature Transmitter and Radiator Fan Switches **RLS** Reverse Light Switches **VAR** Various

ERA S.p.A. Moncalieri (TO) Italy - tel: +39 011 6891511 - fax: +39 011 6472862 - www.eranet.it

Vehicle		Date	Engine	kW	OPS	BLS	TT-RF	RLS	VAR
2.8 Cupra 4	(1M1)	02/01-06/06	AUE	150	330318, 330324	330440, 330725	330123, 330141, 330199, 330230, 330280, 330282	330264, 330579, 330744	
MALAGA			**11/84 - 12/93**						
1.2	(023A)	05/85-12/93	021 A 1000	44	330000	330056	330083, 330291		
1.5	(023A)	05/85-12/93	021 A 2000	63	330000	330056	330083, 330291		
1.5 i	(023A)	01/87-12/93	021 B.2000	74	330000	330056	330083, 330291		
1.7 D	(023A)	05/85-12/93	022 A.5000	40	330000	330056	330083, 330165		
	(023A)	05/90-12/93	022 A.5000	42	330000	330056	330083, 330534		
MARBELLA			**08/86 - 10/98**						
0.8	(28)	08/86-12/93	08 NCA	25	330001	330032	330156, 330175		
	Box (028A)	01/87-12/93	08 NCA	25	330001	330032	330156, 330175		
0.9	(28)	01/87-12/93	100 GL 7000	29	330001	330032	330156, 330175		
	Box (028A)	01/87-12/93	09 NCA	29	330001	330032	330156, 330175		
RONDA			**06/82 - 11/88**						
1.2	(022A)	08/83-05/85	021 A 1000, 124 B6.000	47	330000	330032			
1.6	(022A)	08/83-09/85	022 A 000, 38 AR 6000	68	330000	330336			
1.7 Diesel	(022A)	06/82-12/86	022 A.5000	40	330000	330336	330082		
TERRA			**01/87 - 12/96**						
0.9	(24)	02/87-12/96	09 NCA	29	330001	330032	330175		
1.3 D	(24)	03/90-12/94	MN	33		330032	330284, 330534	330233, 330448	
TOLEDO			**01/91 - 05/09**						
1.4 16V	II (1M2)	07/99-05/06	APE, AUA	55	330320	330440, 330725	330141, 330161, 330199, 330230, 330280, 330282, 330496	330264, 330579, 330744	
1.6	II (1M2)	04/99-09/00	AEH, APF	74	330324	330440, 330706, 330725	330141, 330161, 330199, 330230, 330280, 330282, 330496	330264, 330579, 330744	
	III (5P2)	10/04-05/09	BGU, BSE, BSF	75	330324	330503, 330545	330546	330264, 330579	
1.6 16V	II (1M2)	09/00-05/06	AUS, AZD	77	330320	330440, 330725	330141, 330161, 330199, 330230, 330280, 330282	330264, 330579, 330744	
1.6 i	I (1L)	05/91-12/93	1F	52	330004, 330322, 330337, 330341, 330342	330045, 330440	330103, 330115, 330127, 330161, 330281, 330285, 330286	330255, 330442	
	I (1L)	05/91-03/99	1F, ABN, EZ	54	330004, 330322, 330337, 330341, 330342	330045, 330440	330103, 330115, 330127, 330161, 330162, 330281, 330285, 330286, 330289	330255, 330442	
	I (1L)	01/93-03/99	1F	55	330004, 330322, 330337, 330341, 330342	330045, 330440	330103, 330115, 330127, 330161, 330281, 330285, 330286	330255, 330442	

OPS Oil Pressure Switches **BLS** Brake Light Switches **TT-RF** Temperature Transmitter and Radiator Fan Switches **RLS** Reverse Light Switches **VAR** Various

Vehicle		Date	Engine	kW	OPS	BLS	TT-RF	RLS	VAR
1.6 i	I (1L)	11/96-03/99	AFT	74	330337, 330342	330045, 330440	330161, 330162, 330287, 330288	330442	
1.8 All-wheel Drive	II (1M2)	05/01-04/04	AJQ	132		330725		330744	
1.8 16V	I (1L)	05/91-03/99	PL	92	330004, 330322, 330337, 330341, 330342	330045, 330440	330103, 330115, 330127, 330281, 330285, 330286	330255, 330442	
	I (1L)	05/91-03/99	KR	98	330004, 330322, 330337, 330341, 330342	330045, 330440	330103, 330115, 330127, 330281, 330285, 330286, 330308	330255, 330442	
1.8 20V	II (1M2)	04/99-05/06	AGN, APG	92	330324	330440, 330706, 330725	330141, 330161, 330199, 330230, 330280, 330282, 330496	330264, 330579, 330744	
1.8 20VT	II (1M2)	05/01-05/06	APP	132	330324	330440, 330725	330141, 330161, 330199, 330230, 330280, 330282	330264, 330579, 330744	
1.8 GT	I (1L)	05/91-11/92	KR	102	330004, 330322, 330337, 330341, 330342	330045, 330440	330103, 330115, 330127, 330281, 330285, 330286, 330308	330255, 330442	
1.8 i	I (1L)	05/91-12/96	RP	65	330004, 330322, 330337, 330341, 330342	330045, 330440	330103, 330115, 330127, 330161, 330281, 330285, 330286	330255, 330442	
	I (1L)	11/93-12/96	ABS, ADZ	66	330004, 330322, 330337, 330341, 330342	330045, 330440	330103, 330115, 330127, 330161, 330164, 330281, 330285, 330286, 330287	330255, 330442	
1.8 TFSI	III (5P2)	01/07-05/09	BZB	118	330324	330503, 330545	330546	330264, 330579	
1.9 D	I (1L)	12/95-03/99	1Y	47	330004, 330322, 330341, 330342	330045, 330440	330123, 330128, 330163, 330164, 330281	330442	
	I (1L)	05/91-03/99	1Y	50	330004, 330322, 330341, 330342	330045, 330440	330123, 330128, 330163, 330164, 330281	330442	
1.9 SDI	I (1L)	12/95-03/99	1Y	47	330004, 330322, 330341, 330342	330045, 330440	330123, 330128, 330163, 330164, 330281	330442	
1.9 TD	I (1L)	05/91-03/99	AAZ	55	330004, 330322, 330341, 330342	330045, 330440	330123, 330128, 330163, 330164, 330281	330442	
1.9 TDI	I (1L)	08/95-03/99	1Z, AHU	66	330004, 330322, 330341, 330342	330045, 330440, 330706	330116, 330123, 330161, 330162, 330281, 330286, 330287, 330288	330442, 330744	
	II (1M2)	04/99-05/06	AGR, ALH	66	330325	330440, 330706, 330725	330141, 330161, 330199, 330230, 330280, 330282, 330496	330264, 330579, 330744	
	III (5P2)	10/04-05/09	BJB, BKC	77	330325	330503, 330545	330546	330264, 330579	
	I (1L)	11/96-03/99	AFN	81	330341, 330342	330440, 330706	330161, 330162, 330164, 330287, 330288	330442	

OPS Oil Pressure Switches **BLS** Brake Light Switches **TT-RF** Temperature Transmitter and Radiator Fan Switches **RLS** Reverse Light Switches **VAR** Various

ERA S.p.A. Moncalieri (TO) Italy - tel: +39 011 6891511 - fax: +39 011 6472862 - www.eranet.it

Vehicle		Date	Engine	kW	OPS	BLS	TT-RF	RLS	VAR
1.9 TDI	II (1M2)	04/99-05/06	AHF, ASV	81	330325	330440, 330706, 330725	330141, 330161, 330199, 330230, 330280, 330282, 330496	330264, 330579, 330744	
	II (1M2)	05/03-05/06	ASZ	96	330325	330725	330141, 330199, 330230, 330280, 330282	330264, 330579, 330744	
	II (1M2)	10/00-05/06	ARL	110	330325	330440, 330725	330141, 330161, 330199, 330230, 330280, 330282	330264, 330579, 330744	
2.0	III (5P2)	02/06-	--	147		330503, 330545	330546	330264	
2.0 FSI	III (5P2)	10/04-05/09	BLR, BLY	110		330503, 330545	330546	330264, 330579	
2.0 i	I (1L)	05/91-03/99	2E, AGG	85	330004, 330337, 330342, 330370	330045, 330440	330103, 330123, 330163, 330164, 330281, 330287	330255, 330442	
2.0 i 16V	I (1L)	11/93-03/99	ABF	110	330004, 330337, 330342	330045, 330440	330115, 330123, 330164, 330281, 330284	330442	
2.0 TDI	III (5P2)	09/04-05/09	AZV	100	330325	330503, 330545	330546	330264, 330579	
	III (5P2)	11/05-05/09	BMM	103		330503, 330545	330546	330264, 330579	
	III (5P2)	01/06-05/09	BMN	125	330325	330503, 330545	330546	330264, 330579	
2.0 TDI 16V	III (5P2)	04/04-05/09	BKD	103	330325	330503, 330545	330546	330264, 330579	
2.0 TFSI	III (5P2)	11/05-05/09	BWA	147		330503, 330545	330546	330264, 330579	
2.3 V5	II (1M2)	04/99-05/01	AGZ	110	330321, 330324	330440, 330706, 330725	330123, 330141, 330161, 330199, 330230, 330280, 330282, 330496	330264, 330579, 330744	
2.3 V5 20V	II (1M2)	05/01-05/06	AQN	125	330324	330440, 330725	330123, 330141, 330199, 330230, 330280, 330282	330264, 330579, 330744	

SKODA

105,120 — 08/76 - 12/90

1.0 105 S,L	(744)	02/88-12/90	742,10	32	330025		330172	330238	
	(742)	08/76-12/90	742,10	34	330025		330172	330238	
1.0 105 S,L,GL	(742)	08/76-08/83	742,10	33	330025		330172	330238	
1.0 105 S,L,LS	(744)	10/83-12/90	742,10	33	330025		330172	330238	
1.2 120 GLS	(744)	02/83-12/90	742.12 X	43	330025		330172	330238	
1.2 120 L	(744)	08/87-12/90	742,12	35	330025		330172	330238	
	(742)	08/76-12/90	--	38	330025		330172	330238	
	(744)	10/83-12/90	742,12	38	330025		330172	330238	
1.2 120 LS	(742)	08/76-12/90	742.12 X	43	330025		330172	330238	

FABIA — 08/99 -

1.0	(6Y2)	12/99-08/02	AQV, ARV	37	330696	330503, 330725	330199, 330230, 330546	330265, 330511	
	Combi (6Y5)	11/00-08/02	ARV	37	330696	330725			
	Saloon (6Y3)	11/00-08/02	AQV	37	330696	330503, 330725	330199, 330230, 330546	330265, 330511	
1.2	(6Y2)	08/02-03/08	AWY, BMD	40	330320	330503, 330725	330199, 330230, 330546	330579	

OPS Oil Pressure Switches **BLS** Brake Light Switches **TT-RF** Temperature Transmitter and Radiator Fan Switches **RLS** Reverse Light Switches **VAR** Various

Vehicle		Date	Engine	kW	OPS	BLS	TT-RF	RLS	VAR
1.2	Combi (6Y5)	07/01-12/07	AWY, BMD	40	330320	330503, 330725	330199, 330230, 330546	330579	
	Praktik	07/01-12/07	AWY, BMD	40	330320	330503, 330725	330199, 330230, 330546	330579	
	Saloon (6Y3)	07/01-12/07	AWY, BMD	40	330320	330503, 330725	330199, 330230, 330546	330579	
		12/06-	BBM	44	330320	330503, 330725	330199, 330230, 330546	330579	
	Combi	10/07-	BBM	44	330320	330503, 330725	330199, 330230, 330546	330579	
	(6Y2)	01/03-03/08	AZQ, BME	47	330320	330503, 330725	330199, 330230, 330546	330579	
	Combi (6Y5)	01/03-12/07	AZQ, BME	47	330320	330503, 330725	330199, 330230, 330546	330579	
	Praktik	01/03-12/07	AZQ, BME	47	330320	330503, 330725	330199, 330230, 330546	330579	
	Saloon (6Y3)	01/03-12/07	AZQ, BME	47	330320	330503, 330725	330199, 330230, 330546	330579	
		01/07-	BZG	51	330320	330503, 330725	330199, 330230, 330546	330579	
	Combi	10/07-	BZG	51	330320	330503, 330725	330199, 330230, 330546	330579	
1.2 TDI		05/10-	CFWA	55		330725			
	Combi	05/10-	CFWA	55		330725			
1.2 TSI		03/10-	CBZA	63		330725		330579	
	Combi	03/10-	CBZA	63		330725		330579	
		03/10-	CBZB	77		330725		330579	
	Combi	03/10-	CBZB	77		330725		330579	
1.4	(6Y2)	08/00-08/02	AZE, AZF	44	330696	330503, 330725	330199, 330230, 330546	330265, 330511	
	Combi (6Y5)	04/00-12/07	AZE, AZF	44	330696	330503, 330725	330199, 330230, 330546	330265, 330511	
	Saloon (6Y3)	04/00-08/02	AZE, AZF	44	330696	330503, 330725	330199, 330230, 330546	330265, 330511	
	(6Y2)	08/99-03/08	AME, AQW, ATZ	50	330696	330503, 330725	330199, 330230, 330546	330265, 330511	
	Combi (6Y5)	04/00-12/07	AME, AQW, ATZ	50	330696	330503, 330725	330199, 330230, 330546	330265, 330511	
	Praktik	07/01-12/07	AME, AQW, ATZ	50	330696	330503, 330725	330199, 330230, 330546	330265, 330511	
	Saloon (6Y3)	07/01-12/07	AME, AQW	50	330696	330503, 330725	330199, 330230, 330546	330265, 330511	
	(6Y2)	02/06-10/06	BUD	59	330320	330503, 330725	330199, 330230, 330546	330579	
		01/07-	BXW	63	330320	330503, 330725	330199, 330230, 330546	330579	
	Combi	10/07-	BXW	63	330320	330503, 330725	330199, 330230, 330546	330579	
1.4 16V	(6Y2)	12/99-03/08	AUA, BBY, BKY	55	330320	330503, 330725	330199, 330230, 330546	330579	
	Combi (6Y5)	05/00-12/07	AUA, BBY, BKY	55	330320	330503, 330725	330199, 330230, 330546	330579	
	Saloon (6Y3)	10/99-12/07	AUA, BBY, BKY	55	330320	330503, 330725	330199, 330230, 330546	330579	

OPS Oil Pressure Switches **BLS** Brake Light Switches **TT-RF** Temperature Transmitter and Radiator Fan Switches **RLS** Reverse Light Switches **VAR** Various

ERA S.p.A. Moncalieri (TO) Italy - tel: +39 011 6891511 - fax: +39 011 6472862 - www.eranet.it

Vehicle		Date	Engine	kW	OPS	BLS	TT-RF	RLS	VAR
1.4 16V	Combi (6Y5)	04/06-12/07	BUD	59	330320	330503, 330725	330199, 330230, 330546	330579	
	Saloon (6Y3)	04/06-12/07	BUD	59	330320	330503, 330725	330199, 330230, 330546	330579	
	(6Y2)	12/99-03/08	AUB, BBZ	74	330320	330503, 330725	330199, 330230, 330546	330579	
	Combi (6Y5)	04/00-12/07	AUB, BBZ	74	330320	330503, 330725	330199, 330230, 330546	330579	
	Saloon (6Y3)	12/99-12/07	AUB, BBZ	74	330320	330503, 330725	330199, 330230, 330546	330579	
1.4 TDI		02/07-	BNM	51	330325	330503, 330725	330199, 330230, 330546	330579	
	(6Y2)	10/05-03/08	BNM	51	330325	330503, 330725	330199, 330230, 330546	330579	
	Combi	10/07-	BNM	51	330325	330503, 330725	330199, 330230, 330546	330579	
	Combi (6Y5)	10/05-12/07	BNM	51	330325	330503, 330725	330199, 330230, 330546	330579	
	Praktik	10/05-12/07	BNM	51	330325	330503, 330725	330199, 330230, 330546	330579	
	Saloon (6Y3)	10/05-12/07	BNM	51	330325	330503, 330725	330199, 330230, 330546	330579	
	(6Y2)	04/03-03/08	AMF	55	330325	330503, 330725	330199, 330230, 330546	330264	
	Combi (6Y5)	04/03-12/07	AMF	55	330325	330503, 330725	330199, 330230, 330546	330264	
	Saloon (6Y3)	04/03-12/07	AMF	55	330325	330503, 330725	330199, 330230, 330546	330264	
		01/07-	BMS	59	330325	330503, 330725	330199, 330230, 330546	330264	
	(6Y2)	10/05-03/08	BNV	59	330325	330503, 330725	330199, 330230, 330546	330264	
	Combi	10/07-	BMS	59	330325	330503, 330725	330199, 330230, 330546	330264	
	Combi (6Y5)	10/05-12/07	BNV	59	330325	330503, 330725	330199, 330230, 330546	330264	
	Saloon (6Y3)	10/05-12/07	BNV	59	330325	330503, 330725	330199, 330230, 330546	330264	
1.4 TSI		05/10-	CAVE	132		330725			
	Combi	05/10-	CAVE	132		330725			
1.6		04/07-	BTS	77	330320	330503, 330725	330230, 330546	330579	
	Combi	10/07-	BTS	77	330320	330503, 330725	330230, 330546	330579	
1.6 TDI		04/10-	CAYA	55		330725			
	Combi	04/10-	CAYA	55		330725			
		03/10-	CAYB	66		330725			
	Combi	03/10-	CAYB	66		330725			
		03/10-	CAYC	77		330725			
	Combi	03/10-	CAYC	77		330725			
1.9 SDI	(6Y2)	12/99-03/08	ASY	47	330325	330503, 330725	330199, 330230, 330546	330579	
	Combi (6Y5)	04/00-12/07	ASY	47	330325	330503, 330725	330199, 330230, 330546	330579	

OPS Oil Pressure Switches **BLS** Brake Light Switches **TT-RF** Temperature Transmitter and Radiator Fan Switches **RLS** Reverse Light Switches **VAR** Various

Vehicle		Date	Engine	kW	OPS	BLS	TT-RF	RLS	VAR
1.9 SDI	Praktik	07/01-12/07	ASY	47	330325	330503, 330725	330199, 330230, 330546	330579	
	Saloon (6Y3)	11/99-12/07	ASY	47	330325	330503, 330725	330199, 330230, 330546	330579	
1.9 TDI	(6Y2)	01/00-03/08	ATD	74	330325	330503, 330725	330199, 330230, 330546	330264	
	Combi (6Y5)	04/00-12/07	ATD	74	330325	330503, 330725	330199, 330230, 330546	330264	
	Saloon (6Y3)	01/00-12/07	ATD	74	330325	330503, 330725	330199, 330230, 330546	330264	
		04/07-	BLS, BSW	77	330325	330503, 330725	330546	330264	
	Combi	10/07-	BLS, BSW	77	330325	330503, 330725	330546	330264	
1.9 TDI RS	(6Y2)	06/03-03/08	ASZ	96	330325	330503, 330725	330199, 330230, 330546	330264, 330579	
2.0	(6Y2)	12/99-03/08	AQY, AZL	85	330324	330503, 330725	330199, 330230, 330546	330579	
	Combi (6Y5)	04/00-12/07	AZL	85	330324	330503, 330725	330199, 330230, 330546	330579	
	Saloon (6Y3)	12/99-12/07	AZL	85	330324	330503, 330725	330199, 330230, 330546	330579	
FAVORIT		**05/89 - 06/97**							
1.3	Forman (785)	09/91-06/95	781.135E	40	330025	330032	330116, 330170, 330269, 330691	330238	
	Pickup (787)	12/92-06/97	135B	40	330025	330032	330116, 330170, 330269, 330691	330238	
	Pickup (787)	12/92-06/97	781.135	42	330025	330032	330170, 330269, 330691	330238	
	Forman (785)	12/91-06/95	781.135	44	330025	330032	330170, 330269, 330691	330238	
	Forman (785)	08/91-06/95	OHC	45	330025	330032	330170, 330269, 330691	330238	
	(781)	01/94-09/94	136B	50	330025	330032	330116, 330170, 330269, 330691	330238	
	Forman (785)	01/94-06/95	136B	50	330025	330032	330116, 330170, 330269, 330691	330238	
	Pickup (787)	12/92-06/97	136B	50	330025	330032	330116, 330170, 330269, 330691	330238	
1.3 135	(781)	12/91-09/94	781.135	42	330025	330032	330170, 330269, 330691	330238	
	(781)	12/91-09/94	781.135	43	330025	330032	330170, 330269, 330691	330238	
	(781)	10/90-09/94	781.135	44	330025	330032	330170, 330269, 330691	330238	
1.3 135 X,LX,GLX	(781)	01/90-09/94	781.135E	40	330025	330032	330116, 330170, 330269, 330691	330238	
1.3 135L	(781)	05/89-09/94	781.135	43	330025	330032	330170, 330269, 330691	330238	
1.3 136	(781)	10/90-09/94	136 L	45	330025	330032	330170, 330269, 330691	330238	
FELICIA		**10/94 -**							
1.3	I (6U1)	10/94-03/98	135B, AMG	40	330025	330032	330128, 330269, 330287	330265	

OPS Oil Pressure Switches **BLS** Brake Light Switches **TT-RF** Temperature Transmitter and Radiator Fan Switches **RLS** Reverse Light Switches **VAR** Various

ERA S.p.A. Moncalieri (TO) Italy - tel: +39 011 6891511 - fax: +39 011 6472862 - www.eranet.it

Vehicle		Date	Engine	kW	OPS	BLS	TT-RF	RLS	VAR
1.3	II (6U1)	01/98-06/01	AMG	40	330025	330032	330128, 330269, 330287	330265	
	I (6U1)	10/94-03/98	135 L, AMJ	43	330025	330032	330128, 330170, 330269, 330287	330238, 330265	
	I Estate (6U5)	08/95-03/98	135 L, AMJ	43	330025	330032	330128, 330170, 330269, 330287	330238, 330265	
	I (6U1)	10/94-03/98	136B, AMH	50	330025	330032	330128, 330269, 330287	330265	
	II (6U1)	01/98-06/01	AMH	50	330025	330032	330128, 330269, 330287	330265	
	II Estate (6U5)	01/98-06/01	AMH	50	330025	330032	330128, 330269, 330287	330265	
1.3 LX	I Estate (6U5)	08/95-03/98	135B, AMG	40	330025	330032	330128, 330269, 330287	330265	
1.3 LXI	I Estate (6U5)	08/95-03/98	136B, AMH	50	330025	330032	330128, 330269, 330287	330265	
1.6	I Fun (797)	06/97-	AEE	55	330342	330032	330287	330265, 330442	
	II (6U1)	01/98-06/01	AEE	55	330342	330032	330287	330265, 330442	
	II Estate (6U5)	01/98-06/01	AEE	55	330342	330032	330287	330265, 330442	
1.6 GLX	I Estate (6U5)	08/95-03/98	AEE	55	330342	330032	330287	330265, 330442	
1.6 LX	I (6U1)	08/95-03/98	AEE	55	330342	330032	330287	330265, 330442	
1.9 D	I (6U1)	10/95-03/98	AEF	47	330342	330032	330128	330265, 330442	
	I Estate (6U5)	10/95-03/98	AEF	47	330342	330032	330128	330265, 330442	
	I Fun (797)	06/97-	AEF	47	330342	330032	330128	330265, 330442	
	II (6U1)	01/98-06/01	AEF	47	330342	330032	330128	330265, 330442	
	II Estate (6U5)	01/98-06/01	AEF	47	330342	330032	330128	330265, 330442	
OCTAVIA			**09/96 -**						
1.4	(1U2)	04/99-	AMD	44	330367, 330696	330440, 330706, 330725	330141, 330161, 330199, 330230, 330280, 330282, 330496, 330497	330265, 330544	
	(1Z3)	05/04-05/06	BCA	55	330320	330503, 330545, 330725	330141, 330199, 330230, 330280	330579	
	(1Z3)	06/04-	BUD	59	330320		330230, 330546	330579	
	Combi (1Z5)	05/06-	BUD	59	330320		330230, 330546	330579	
1.4 16V	(1U2)	09/00-	AXP, BCA	55	330320	330725	330141, 330199, 330230, 330280, 330282, 330496	330264, 330544, 330579, 330744	
	Combi (1U5)	08/00-	AXP, BCA	55	330320	330725	330141, 330199, 330230, 330280, 330282, 330496	330264, 330544, 330579, 330744	
1.4 TSI	(1Z3)	11/08-	CAXA	90				330579	
	Combi (1Z5)	11/08-	CAXA	90				330579	
1.6	(1U2)	09/96-09/00	AEE	55	330319	330440, 330706, 330725	330141, 330161, 330199, 330230, 330280, 330282, 330496, 330497	330261, 330264, 330544, 330744	
	Combi (1U5)	07/98-	AEE	55	330319	330440, 330706, 330725	330141, 330161, 330199, 330230, 330280, 330282, 330497	330261, 330264, 330544, 330744	

OPS Oil Pressure Switches **BLS** Brake Light Switches **TT-RF** Temperature Transmitter and Radiator Fan Switches **RLS** Reverse Light Switches **VAR** Various

Vehicle		Date	Engine	kW	OPS	BLS	TT-RF	RLS	VAR
1.6	(1U2)	02/97-	AEH, AKL	74	330322, 330324	330440, 330706, 330725	330141, 330161, 330199, 330230, 330280, 330282, 330496, 330497	330261, 330264, 330544, 330744	
	Combi (1U5)	07/98-	AEH, AKL	74	330322, 330324	330440, 330706, 330725	330141, 330161, 330199, 330230, 330280, 330282, 330496, 330497	330261, 330264, 330544, 330744	
	(1U2)	11/00-	AVU, BFQ	75	330324	330440, 330725	330141, 330199, 330230, 330280, 330282, 330496, 330546	330264, 330544, 330744	
	(1Z3)	06/04-	BGU	75	330324	330503, 330545	330546	330579	
	Combi (1U5)	09/00-	AVU, BFQ	75	330324	330440, 330725	330141, 330199, 330230, 330280, 330282, 330496, 330546	330264, 330544, 330744	
	Combi (1Z5)	09/04-	BGU	75	330324	330503, 330545	330546	330579	
1.6 FSI	(1Z3)	02/04-10/08	BLF	85	330320		330546	330544, 330579	
	Combi (1Z5)	02/04-10/08	BLF	85	330320	330503, 330545	330546	330579	
1.6 MultiFuel	(1Z3)	01/08-	CCSA	75				330579	
	Combi (1Z5)	01/08-	CCSA	75				330579	
1.8	(1U2)	09/96-	AGN	92	330322, 330324	330440, 330706	330141, 330161, 330199, 330230, 330281, 330282, 330496, 330497	330261, 330264, 330744	
1.8 20V	Combi (1U5)	07/98-	AGN	92	330322, 330324	330440, 330706	330141, 330161, 330199, 330230, 330281, 330282, 330496, 330497	330261, 330264, 330744	
1.8 T	(1U2)	08/97-	AGU, ARX, ARZ, AUM	110	330322, 330324	330440, 330706, 330725	330141, 330161, 330199, 330230, 330280, 330282, 330496, 330497	330261, 330264, 330544, 330744	
	Combi (1U5)	07/98-	AGU, ARX, ARZ, AUM	110	330322, 330324	330440, 330706, 330725	330141, 330161, 330199, 330230, 330280, 330282, 330496, 330497	330261, 330264, 330544, 330744	
1.8 T 4x4	(1U2)	05/01-	AGU, ARX, AUM	110	330322, 330324	330440, 330706, 330725	330141, 330161, 330199, 330230, 330280, 330282, 330496, 330497	330264, 330544, 330744	
	Combi (1U5)	05/01-	AGU, ARX, AUM	110	330322, 330324	330440, 330706, 330725	330141, 330161, 330199, 330230, 330280, 330282, 330497	330264, 330544, 330744	
1.8 TSI	Combi (1Z5)	06/07-	BZB	118				330579	
1.8 TSI 4x4	Combi (1Z5)	11/08-	CDAA	118				330579	
1.9 SDI	(1U2)	06/97-	AGP, AQM	50	330325, 330341	330440, 330706, 330725	330141, 330161, 330199, 330230, 330280, 330282, 330496, 330497	330261, 330264, 330544, 330744	
	Combi (1U5)	07/98-	AGP, AQM	50	330325, 330341	330440, 330706, 330725	330141, 330161, 330199, 330230, 330280, 330282, 330496, 330497	330261, 330264, 330544, 330744	

OPS Oil Pressure Switches **BLS** Brake Light Switches **TT-RF** Temperature Transmitter and Radiator Fan Switches **RLS** Reverse Light Switches **VAR** Various

ERA S.p.A. Moncalieri (TO) Italy - tel: +39 011 6891511 - fax: +39 011 6472862 - www.eranet.it

Vehicle		Date	Engine	kW	OPS	BLS	TT-RF	RLS	VAR
1.9 TDI	(1U2)	09/96-	AGR, ALH	66	330325, 330341	330440, 330706, 330725	330123, 330141, 330161, 330199, 330230, 330280, 330282, 330496, 330497	330261, 330264, 330544, 330744	
	Combi (1U5)	07/98-	AGR, ALH	66	330325, 330341	330440, 330706, 330725	330123, 330141, 330161, 330199, 330230, 330280, 330282, 330496, 330497	330261, 330264, 330544, 330744	
	(1U2)	10/05-	AXR	74		330725	330141, 330199, 330230, 330280	330264, 330544	
	Combi (1U5)	08/00-	ATD, AXR	74	330325	330725	330141, 330199, 330230, 330280, 330282, 330546	330264, 330544, 330744	
	(1Z3)	06/04-12/10	BJB, BKC	77	330325	330503, 330545	330546	330579	
	Combi (1Z5)	09/04-12/10	BJB, BKC	77	330325	330503, 330545	330546	330579	
	(1U2)	08/97-	AHF, ASV	81	330325, 330341	330440, 330706, 330725	330141, 330161, 330164, 330199, 330230, 330280, 330282, 330496, 330497	330261, 330264, 330544, 330744	
	Combi (1U5)	07/98-	AHF, ASV	81	330325, 330341	330440, 330706, 330725	330141, 330161, 330164, 330199, 330230, 330280, 330282, 330496, 330497	330261, 330264, 330544, 330744	
	(1U2)	01/03-	ASZ	96	330325	330725	330141, 330199, 330230, 330280	330264, 330544	
	Combi (1U5)	01/03-	ASZ	96	330325	330725	330141, 330199, 330230, 330280	330264, 330544	
1.9 TDI 4x4	Combi (1U5)	11/99-09/00	AGR	66	330325, 330341	330440, 330706, 330725	330123, 330141, 330161, 330199, 330230, 330280, 330282, 330497	330261, 330264, 330544, 330744	
	Combi (1U5)	09/00-	ATD	74	330325	330725	330141, 330199, 330230, 330280, 330282, 330496, 330546	330264, 330544, 330744	
	Combi (1Z5)	11/04-12/10	BKC	77	330325	330503, 330545	330546	330579	
2.0	(1U2)	04/99-	AEG, APK, AQY, AZH	85	330324	330440, 330706, 330725	330141, 330161, 330199, 330230, 330280, 330282, 330496, 330497	330261, 330264, 330544, 330744	
	Combi (1U5)	04/99-	AEG, APK, AQY, AZH, AZJ	85	330324	330440, 330706, 330725	330141, 330161, 330199, 330230, 330280, 330282, 330496, 330497	330261, 330264, 330544, 330744	
2.0 4x4	Combi (1U5)	05/01-	AEG, AQY, AZH, AZJ	85	330324	330440, 330706, 330725	330141, 330161, 330199, 330230, 330280, 330282, 330497	330261, 330264, 330544, 330744	
2.0 FSI	(1Z3)	11/04-	BLR, BLY	110		330503, 330545	330546	330579	
	Combi (1Z5)	11/04-	BLR, BLY	110		330503, 330545	330546	330579	
2.0 FSI 4x4	Combi (1Z5)	11/04-	BLX	110		330503, 330545	330546	330579	
2.0 RS	(1Z3)	10/05-	BWA	147		330503, 330545	330546	330579	

OPS Oil Pressure Switches **BLS** Brake Light Switches **TT-RF** Temperature Transmitter and Radiator Fan Switches **RLS** Reverse Light Switches **VAR** Various

Vehicle		Date	Engine	kW	OPS	BLS	TT-RF	RLS	VAR
2.0 RS	Combi (1Z5)	10/05-	BWA	147		330503, 330545	330546	330579	
2.0 TDI	(1Z3)	02/04-05/10	AZV	100	330325	330503, 330545	330546	330579	
	(1Z3)	11/05-	BMM	103	330325	330503, 330545	330546	330579	
	Combi (1Z5)	11/05-	BMM	103	330325	330503, 330545	330546	330579	
2.0 TDI 4x4	Combi (1Z5)	07/06-	BMM	103	330325	330503, 330545	330546	330579	
2.0 TDI 16V	Combi (1Z5)	02/04-05/10	AZV	100	330325	330503, 330545	330546	330579	
	(1Z3)	02/04-	BKD	103	330325	330503, 330545	330546	330579	
	Combi (1Z5)	02/04-	BKD	103	330325	330503, 330545	330546	330579	
2.0 TDI RS	(1Z3)	04/06-	BMN, CEGA	125	330325		330546	330579	
	Combi (1Z5)	04/06-	BMN, CEGA	125	330325		330546	330579	
RS 1.8 T	(1U2)	05/01-	AUQ	132	330324	330725	330141, 330199, 330230, 330280, 330282, 330496	330264, 330544, 330744	
	Combi (1U5)	08/02-	AUQ	132	330324	330725	330141, 330199, 330230, 330280, 330282	330264, 330544, 330744	
ROOMSTER		**05/06 -**							
1.2	(5J)	05/06-01/07	BME	47	330320	330503, 330725	330230, 330546	330579	
	(5J)	01/07-	BZG	51		330503, 330725	330199, 330230, 330546	330579	
1.2 TSI	(5J)	03/10-	CBZA	63		330725		330579	
	(5J)	03/10-	CBZB	77		330725		330579	
1.4	(5J)	09/06-	BXW	63	330320	330503, 330725	330546	330579	
1.4 TDI	(5J)	07/06-03/10	BNM	51	330325	330503, 330725	330230, 330546	330579	
	(5J)	09/06-03/10	BMS	59	330325	330503, 330725	330230, 330546	330264	
1.6	(5J)	09/06-	BTS	77	330320	330503, 330725	330230, 330546	330579	
1.6 TDI	(5J)	03/10-	CAYB	66		330725			
	(5J)	03/10-	CAYC	77		330725			
1.9 TDI	(5J)	09/06-03/10	BLS	77	330325	330503, 330725	330230, 330546	330264	
ROOMSTER Praktik		**03/07 -**							
1.2	(5J)	03/07-	BZG	51	330320	330503, 330725	330199, 330230, 330546	330579	
1.4	(5J)	03/07-	BXW	63	330320	330503, 330725	330199, 330230, 330546	330579	
1.4 TDI	(5J)	03/07-03/10	BNM	51	330325	330503, 330725	330199, 330230, 330546	330579	
	(5J)	03/07-03/10	BMS	59	330325	330503, 330725	330199, 330230, 330546	330264	
SUPERB		**02/02 -**							
1.4 TSI	(3T4)	07/08-	CAXC	92	330320		330546	330579	
	Estate (3T5)	10/09-	CAXC	92				330579	
1.8 T	(3U4)	02/02-03/08	AWT	110	330321, 330324	330328, 330545, 330725	330141, 330231, 330496	330748, 330753	
1.8 TSI	(3T4)	03/08-	BZB, CDAA	118	330324		330546	330264	
1.8 TSI 4x4	(3T4)	11/08-	CDAA	118			330546	330264	

OPS Oil Pressure Switches **BLS** Brake Light Switches **TT-RF** Temperature Transmitter and Radiator Fan Switches **RLS** Reverse Light Switches **VAR** Various

ERA S.p.A. Moncalieri (TO) Italy - tel: +39 011 6891511 - fax: +39 011 6472862 - www.eranet.it

Vehicle		Date	Engine	kW	OPS	BLS	TT-RF	RLS	VAR
1.9 TDI	(3U4)	08/02-10/05	AVB	74	330321, 330325	330328, 330545, 330725	330141, 330231	330753	
	(3T4)	03/08-	BLS, BXE	77	330325		330546	330264	
	(3U4)	10/05-05/07	BSV	77	330321, 330325	330328, 330545, 330725	330141	330753	
	(3U4)	01/07-03/08	BPZ	85		330725		330753	
	(3U4)	02/02-03/08	AVF, AWX	96	330321, 330325	330328, 330545, 330725	330141, 330231, 330496	330753	
2.0	(3U4)	02/02-03/08	AZM	85	330321, 330324	330328, 330545, 330725	330141, 330231, 330496	330753	
2.0 TDI	(3T4)	03/08-	BMP	103	330325		330546	330264, 330579	
	(3U4)	10/05-03/08	BSS	103	330321, 330325	330328, 330545, 330725	330141, 330231	330748	
	Estate (3T5)	10/09-03/10	BMP	103				330579	
	(3T4)	07/08-	CBBB	125	330325		330546	330264, 330579	
	Estate (3T5)	10/09-	CBBB, CFGB	125				330579	
2.0 TDI 16V	(3T4)	01/09-	BKD, CFFB, CLJA	103				330579	
	Estate (3T5)	10/09-	BKD, CFFB, CLJA	103				330579	
2.0 TDI 4x4	(3T4)	09/08-	CBBB	125	330325		330546	330264, 330579	
	Estate (3T5)	10/09-	CBBB, CFGB	125				330579	
2.5 TDI	(3U4)	02/02-08/03	AYM	114	330321	330328, 330545, 330725	330141, 330231, 330496, 330644	330748, 330753	
	(3U4)	06/03-03/08	BDG	120	330321	330328, 330545, 330725	330141, 330231, 330644	330748, 330753	
2.8 V6	(3U4)	02/02-03/08	AMX	142	330324	330328, 330545, 330725	330141, 330231, 330496	330753	
3.6 V6 4x4	(3T4)	11/08-	CDVA	191	330541		330546	330579	
YETI			**05/09 -**						
1.2 TSI	(5L)	09/09-	CBZB	77				330579	
1.4 TSI	(5L)	06/10-	CAXA	90				330579	
1.8 TSI 4x4	(5L)	05/09-	CDAA	118				330579	
2.0 TDI 4x4	(5L)	11/09-	CFHF	81				330579	
	(5L)	05/09-	CBDB, CFHC	103				330579	
	(5L)	11/09-	CEGA, CFJA	125				330579	
SMART									
CABRIO			**03/00 - 01/04**						
0.6		03/00-01/04	M 160 E6AL B03	40	330012		330647		
		01/01-01/04	M 160 E6AL B05	45	330012		330647		
		06/02-01/04	M 160.910	52			330647		
0.7		01/03-01/04	--	45			330647		
		01/03-01/04	--	55			330647		
0.8 CDI		03/01-01/04	OM 660 DE 8LA	30	330012		330647		

Vehicle		Date	Engine	kW	OPS	BLS	TT-RF	RLS	VAR
CITY-COUPE		**07/98 - 01/04**							
0.6	(MC01)	07/98-01/04	M 160 E6AL B04	33	330012		330647		
	(MC01)	07/98-01/04	M 160 E6AL B03	40	330012		330647		
	(MC01)	01/01-01/04	M 160 E6AL B05	45	330012		330647		
	(MC01)	06/02-01/04	M 160.910	52			330647		
0.7	(MC01)	01/03-01/04	--	37			330647		
	(MC01)	01/03-01/04	--	45			330647		
	(MC01)	01/03-01/04	--	55			330647		
0.8 CDI	(MC01)	11/99-01/04	OM 660 DE 8LA	30	330012		330647		
CROSSBLADE		**06/02 -**							
0.6		06/02-	--	52			330647		
FORFOUR		**01/04 -**							
1.5 CDI		09/04-	OM 639.939	50		330717	330647		
		09/04-	OM 639.939	70		330717	330647		
FORTWO		**01/04 -**							
0.7	Coupe	01/04-	M 160.920	37			330647		
	Cabrio	01/04-	--	45			330647		
	Coupe	01/04-	--	45			330647		
	Cabrio	01/04-	--	55			330647		
	Coupe	01/04-	--	55			330647		
0.8 CDI	Cabrio	01/04-	OM 660 DE 8LA	30			330647		
	Coupe	01/04-	OM 660 DE 8LA	30			330647		
0.8 CDi	Cabrio	01/07-	OM 660.950	33			330647		
	Coupe	01/07-	OM 660.950	33			330647		
	Cabrio	08/09-	OM 660.951	40			330647		
	Coupe	08/09-	OM 660.951	40			330647		
ROADSTER		**04/03 -**							
0.7		04/03-	--	45			330647		
	Coupe	06/03-	--	45			330647		
		04/03-	--	60			330647		
	Coupe	04/03-	--	60			330647		
0.7 Brabus		12/03-	M 160.923	74			330647		
	Coupe	12/03-	M 160.923	74			330647		
SSANGYONG									
KORANDO		**12/96 -**							
2.9 D	(KJ)	12/96-	MB-OM 662	72		330701	330104		
	Cabrio (KJ)	11/97-	MB-OM 662	72		330701	330104		
2.9 TD	Cabrio (KJ)	04/98-	--	88		330701	330104		

OPS Oil Pressure Switches **BLS** Brake Light Switches **TT-RF** Temperature Transmitter and Radiator Fan Switches **RLS** Reverse Light Switches **VAR** Various

ERA S.p.A. Moncalieri (TO) Italy - tel: +39 011 6891511 - fax: +39 011 6472862 - www.eranet.it

Vehicle		Date	Engine	kW	OPS	BLS	TT-RF	RLS	VAR
3.2	(KJ)	12/96-	M 104.995	154		330701	330104		
	(KJ)	01/99-	M 104.995	156		330701	330104		
	Cabrio (KJ)	01/99-	M 104.995	156		330701	330104		
SUBARU									
FORESTER			**07/97 - 09/02**						
2.0	(SF)	08/97-09/02	EJ20	90	330015	330044	330100, 330638		
	(SF)	06/98-09/02	EJ20	92	330015	330044			
2.0 S Turbo	(SF)	06/98-04/01	EJ20	125	330015	330044			
IMPREZA			**08/92 -**						
1.6	Estate (GD, GG)	12/00-	EJ16	70	330015				
1.6 AWD	Saloon (GD, GG)	12/00-	EJ16	70	330015				
1.6 i 4WD	Estate (GF)	08/92-12/00	EJ16	66			330638		
1.8 i 4WD	Saloon (GC)	08/92-12/00	EJ18	76	330015	330044	330100, 330638		
2.0 16V AWD	Estate (GF)	06/98-12/00	EJ20	92	330015	330044			
2.0 i Turbo 4WD	Estate (GF)	03/94-12/00	EJ20 (Turbo)	155	330015	330044			
2.0 Turbo GT 4WD	Saloon (GC)	03/94-12/00	EJ20 (Turbo)	155	330015	330044			
	Estate (GF)	06/98-12/00	EJ205	160	330015	330044			
	Saloon (GC)	06/98-12/00	EJ205	160	330015	330044			
LEGACY			**01/89 - 08/03**						
1800	I (BC)	01/89-12/93	EJ18 SPI	76	330015		330100, 330638		
	I Estate (BC, BJF)	01/89-07/94	EJ18 SPI	76	330015		330100, 330638		
1800 4WD	I (BC)	01/89-09/91	EJ18 SPI	76	330015		330100, 330638		
	I Estate (BC, BJF)	01/89-07/94	EJ18 SPI	76	330015		330100, 330638		
2.0	III (BE, BH)	04/99-08/03	EJ20	92	330015	330044			
	III Estate (BE, BH)	12/98-08/03	EJ20	92	330015	330044			
2.0 i	II (BD, BG)	09/94-03/99	EJ20E	85	330015	330044	330100, 330638		
	II Estate (BD, BG)	09/94-11/98	EJ20 EMPI	85	330015	330044	330100, 330638		
2.0 i 4WD	II (BD, BG)	09/94-03/99	EJ20	85	330015	330044	330100, 330638		
	II Estate (BD, BG)	09/94-11/98	EJ20	85	330015	330044	330100, 330638		
2.2 i 4WD	II (BD, BG)	09/94-03/99	EJ22 EMPI	94	330015	330044	330100, 330638		
	II Estate (BD, BG)	02/94-12/98	EJ22 EMPI	94	330015	330044	330100, 330638		
	II (BD, BG)	06/96-03/99	EJ22 EMPI	96	330015	330044	330100, 330638		
	II Estate (BD, BG)	06/96-11/98	EJ22 EMPI	96	330015	330044	330100, 330638		
2.5	III (BE, BH)	10/98-08/03	EJ25	115	330015	330044			
	III Estate (BE, BH)	12/98-08/03	EJ25	115	330015	330044			
2.5 i 4WD	II (BD, BG)	06/96-03/99	EJ25D	110	330015	330044	330100, 330638		
	II Estate (BD, BG)	06/96-11/98	EJ25D	110	330015	330044	330100, 330638		
2000	I Estate (BC, BJF)	09/91-12/93	EJ20 EMPI	85			330638		
2000 4WD	I (BC)	08/91-07/94	EJ20 EMPI	85	330015		330100, 330638		
	I Estate (BC, BJF)	09/91-07/94	EJ20 EMPI	85	330015		330100, 330638		

OPS Oil Pressure Switches **BLS** Brake Light Switches **TT-RF** Temperature Transmitter and Radiator Fan Switches **RLS** Reverse Light Switches **VAR** Various

Vehicle		Date	Engine	kW	OPS	BLS	TT-RF	RLS	VAR
2000 Turbo 4WD	I (BC)	05/92-07/94	EJ20-GN	147	330015		330100, 330638		
2000 Turbo Super 4WD	I Estate (BC, BJF)	05/92-07/94	EJ20-GN	147	330015		330100, 330638		
2200 4WD	I (BC)	01/89-07/94	EJ22 EMPI	100	330015		330100, 330638		
2200 Super 4WD	I Estate (BC, BJF)	01/89-07/94	EJ22 EMPI	100	330015		330100, 330638		
SUZUKI									
ALTO		**06/82 -**							
0.8	I (SS80)	06/82-12/85	F8B	29	330009, 330567		330099		
	I (SS80)	10/83-12/85	F8A	29	330009, 330567		330099		
1.0	III (EF)	09/94-06/02	G10B	39	330009, 330567	330081	330095		
	III (EF)	01/00-	G10B	43	330009, 330567	330081	330095		
	V (GF)	01/09-	K10B	50				330745	
1.1	IV (FF)	06/02-	F10D	46	330009, 330567	330741			
BALENO		**03/95 - 05/02**							
1.3 16V	Estate (EG)	03/97-05/02	G13BB	63	330009, 330567	330081			
1.3 i 16V	(EG)	07/95-05/02	G13B	63	330009, 330567	330081			
	Hatchback (EG)	07/95-05/02	G13B	63	330009, 330567	330081			
1.6 i 16V	(EG)	07/95-05/02	G16B	72	330009, 330567	330081			
	Estate (EG)	08/96-05/02	G16B	72	330009, 330567	330081			
	Hatchback (EG)	07/95-05/02	G16B	72	330009, 330567	330081			
	Estate (EG)	08/96-05/02	--	73		330081			
1.6 i 16V 4x4	(EG)	07/95-05/02	G16B	72	330009, 330567	330081			
	Estate (EG)	08/96-05/02	G16B	72	330009, 330567	330081			
	Hatchback (EG)	07/95-05/02	G16B	72	330009, 330567	330081			
	Estate (EG)	08/96-05/02	G16B	73		330081			
1.8 GTX	(EG)	03/96-05/02	J18A	89	330009, 330567	330081			
	Hatchback (EG)	03/96-05/02	J18A	89	330009, 330567	330081			
1.8 i 16V	Estate (EG)	08/96-05/02	J18A	89	330009, 330567	330081			
1.9 TD	(EG)	04/98-05/02	--	55	330023		330556, 330575		
	Estate (EG)	04/98-05/02	--	55	330023		330556, 330575		
	Hatchback (EG)	04/98-05/02	--	55	330023		330556, 330575		
CARRY		**02/99 -**							
1.3	Box (FD)	03/99-	G13B	58	330009, 330567	330081, 330723, 330741			
1.3 16 V	Box (FD)	03/00-	G13BB	58	330009, 330567	330081, 330723, 330741			
GRAND VITARA		**03/98 -**							
1.6	(FT, GT)	03/98-	G16B	69	330009, 330567	330081			
1.6 All-wheel Drive	(JT)	09/05-	M16A	73		330723		330745	
	(JT)	04/05-	M16A	78	330009, 330567	330723		330745	
1.9 DDiS	(JT)	10/05-	--	95	330630, 330698	330723	330558, 330692		

OPS Oil Pressure Switches **BLS** Brake Light Switches **TT-RF** Temperature Transmitter and Radiator Fan Switches **RLS** Reverse Light Switches **VAR** Various

ERA S.p.A. Moncalieri (TO) Italy - tel: +39 011 6891511 - fax: +39 011 6472862 - www.eranet.it

Vehicle		Date	Engine	kW	OPS	BLS	TT-RF	RLS	VAR
2.0	(FT, GT)	03/98-	J20A	94	330009, 330567	330081			
2.0 All-wheel Drive	(JT)	10/05-	J20A	103	330009, 330567	330723		330745	
2.0 HDI 110 16V	(FT, GT)	07/01-	RHW, RHZ	80	330026	330081, 330723	330502		
2.0 TD All-wheel Drive	(FT, GT)	04/00-09/05	--	63		330723			
2.0 TD Intercooler	(FT, GT)	03/98-	RF	64	330008	330081	330087, 330130		
2.4 All-wheel Drive	(JT)	01/09-	J24B	122		330723		330745	
	(JT)	01/09-	J24B	124		330723		330745	
2.5 V6 24V	(FT, GT)	04/98-	H 25 A	106	330009, 330567	330081, 330723			
	(FT, GT)	04/01-	H 25 A	116	330009, 330567	330081, 330723			
2.7	(FT, GT)	06/01-08/03	H 27 A	127		330723			
	(FT, GT)	09/03-08/06	--	135		330723			
2.7 XL-7	(FT, GT)	09/01-	--	127	330009, 330567	330081, 330723			
	(FT, GT)	04/03-	H 27 A	135	330009, 330567	330081, 330723			
3.2 All-wheel Drive	(JT)	01/09-	N32A	171		330723			
IGNIS			**10/00 -**						
1.3	(FH)	10/00-09/03	M13A	61	330009, 330567	330723, 330741		330745	
	II	09/03-	M13A	69	330009, 330567	330547		330745	
1.3 4WD	(FH)	10/00-09/03	M13A	61	330009, 330567	330723, 330741		330745	
1.3 4x4	II	09/03-	M13A	69	330009, 330567	330547		330745	
1.3 DDiS	II	09/03-	Z13DT	51		330547, 330720	330142	330244	
1.5	II	09/03-	M15A	73	330009, 330567	330547		330745	
1.5 4x4	II	09/03-	M15A	73	330009, 330567	330547		330745	
1.5 Sport	II	12/03-	M15A	80	330009, 330567	330547		330745	
JIMNY			**09/98 -**						
1.3 4x4	(FJ)	09/98-08/00	G13BB	63	330009, 330567	330081			
	(FJ)	09/00-08/02	M13A	65	330009, 330567	330723, 330741			
1.3 16V	(FJ)	09/98-	G13BB	59	330009, 330567	330081			
	(FJ)	02/01-	M13A	60	330009, 330567				
1.3 16V 4WD	(FJ)	09/98-	G13BB	59	330009, 330567	330081			
	(FJ)	02/01-	M13A	60	330009, 330567				
1.3 16V 4x4	(FJ)	08/05-	M13A	63	330009, 330567			330745	
1.5 DDiS 4WD	(FJ)	12/03-	K9K 700	48	330630	330723, 330741	330692	330745	
1.5 DDiS 4x4	(FJ)	08/05-	K9K 266	63	330630		330692	330745	
LIANA			**07/01 -**						
1.3	(ER)	03/02-	M13A	66	330009, 330567	330723		330745	
	Estate (ER)	07/01-	--	66	330009, 330567	330723		330745	
1.4 DDiS	(ER)	04/04-	8HY	66	330026	330723	330502	330681	
	Estate (ER)	04/04-	8HY	66	330026	330723	330502	330681	
1.6	(ER)	03/02-	M16A	76	330009, 330567	330723		330745	
	Estate (ER)	07/01-	M16A	76	330009, 330567	330741		330745	

OPS Oil Pressure Switches **BLS** Brake Light Switches **TT-RF** Temperature Transmitter and Radiator Fan Switches **RLS** Reverse Light Switches **VAR** Various

Vehicle		Date	Engine	kW	OPS	BLS	TT-RF	RLS	VAR
1.6	(ER)	01/05-	--	79		330723		330745	
	Estate (ER)	01/05-	M16A	79		330723		330745	
1.6 4WD	(ER)	03/02-	--	76	330009, 330567	330723		330745	
	Estate (ER)	07/01-	--	76	330009, 330567	330741		330745	
	(ER)	04/02-	M16A	78	330009, 330567	330723		330745	
	Estate (ER)	04/02-	M16A	78	330009, 330567	330723		330745	
	(ER)	01/05-	M16A	79		330723		330745	
	Estate (ER)	01/05-	M16A	79		330723		330745	
1.6 i	(ER)	04/02-	M16A	78	330009, 330567	330723		330745	
	Estate (ER)	04/02-	M16A	78	330009, 330567	330723		330745	
1.8 i	(ER)	10/01-	M18A	92		330723		330745	
	Estate (ER)	10/01-	M18A	92	330009, 330567	330723		330745	
SAMURAI			**11/88 -**						
1.3	(SJ)	11/88-	G13A	44	330009, 330567	330081			
	(SJ)	11/88-	G13A	47	330009, 330567	330081	330130		
	(SJ)	08/89-07/92	--	49	330009, 330567	330081	330130		
1.3 All-wheel Drive	(SJ)	11/88-	G13BA	51	330009, 330567	330081	330130		
1.9 TD	(SJ)	11/98-	XUD9	46	330023	330081	330575		
	(SJ)	11/98-	--	47	330023	330081	330575		
SJ 410			**09/81 - 12/88**						
1.0		09/81-12/88	F10A	33	330009, 330567		330087		
	Cabrio	09/81-12/88	F10A	33	330009, 330567		330087		
SJ 413			**09/84 - 08/90**						
1.3		09/84-12/88	G13A	47	330009, 330567	330081	330099		
SPLASH			**01/08 -**						
1.0		01/08-	K10B	48				330745	
1.2		01/08-	K12B	63				330745	
1.3 CDTI		01/08-	D13A	55		330720, 330723		330745	
SUPER CARRY			**07/85 - 03/99**						
1.0	Bus (ED)	09/94-03/99	F10A	30	330009, 330567		330099		
	Bus (ED)	10/92-03/99	F10A	31	330009, 330567		330099		
	Bus (ED)	10/85-03/99	F10A	33	330009, 330567		330099, 330100		
SWIFT			**10/83 -**						
	I (AA)	10/83-03/89	G10, G10A	37	330009, 330567		330099		
1.0 i	II Hatchback (EA, MA)	03/89-12/91	G10A	40	330009, 330567		330099		
1.3	I (AA)	10/84-03/89	G13A	50	330009, 330567	330081	330099, 330135		
	II Hatchback (EA, MA)	03/89-05/01	G13A	50	330009, 330567	330081	330135		
	II Hatchback (EA, MA)	03/89-12/91	G13A	52	330009, 330567	330081	330135		

OPS Oil Pressure Switches **BLS** Brake Light Switches **TT-RF** Temperature Transmitter and Radiator Fan Switches **RLS** Reverse Light Switches **VAR** Various

ERA S.p.A. Moncalieri (TO) Italy - tel: +39 011 6891511 - fax: +39 011 6472862 - www.eranet.it

Vehicle		Date	Engine	kW	OPS	BLS	TT-RF	RLS	VAR
1.3	II Saloon (AH, AJ)	03/89-12/91	G13A	52	330009, 330567	330081	330135		
	I (AA)	10/84-03/89	G13A	54	330009, 330567	330081	330099, 330135		
	III (SG)	02/05-	M13A	68	330009, 330567	330720, 330723		330745	
1.3 4WD	II Hatchback (EA, MA)	03/89-05/01	G13A	50	330009, 330567	330081	330135		
	II Hatchback (EA, MA)	10/89-12/91	G13A	52	330009, 330567	330081	330135		
1.3 4x4	III (SG)	01/06-	M13A	66	330009, 330567			330745	
	III (SG)	02/05-	M13A	68				330745	
1.3 DDiS	III (SG)	08/05-	Z13DT	51		330720, 330723	330142	330244	
	III (SG)	08/05-	D13A	55		330720, 330723			
1.3 GTi	II Hatchback (EA, MA)	03/89-05/01	G13B	74	330009, 330567	330081	330099, 330100, 330654		
1.3 GTi/GXi	I (AA)	08/86-03/89	G13B	74	330009, 330567	330081	330099, 330654		
1.3 i	Convertible (SF413)	09/91-10/96	G13BA	50	330009, 330567	330081	330100, 330130		
1.5	III (SG)	02/05-	M15A	75	330009, 330567	330720, 330723		330745	
1.5 4x4	III (SG)	02/05-	M15A	74				330745	
1.6	II Saloon (AH, AJ)	11/89-12/91	G16B	70	330009, 330567	330081	330099, 330100		
	III (SG)	05/06-	M16A	92	330009, 330567	330720, 330723		330745	
1.6 4WD	II Saloon (AH, AJ)	11/89-12/91	G16B	70	330009, 330567	330081	330099, 330100		
SX4		**06/06 -**							
1.5	(GY)	06/06-	M15A	73	330009, 330567	330720, 330723		330745	
1.6	(GY)	06/06-	M16A	74		330720, 330723		330745	
	Saloon (GY)	10/07-	M16A	74		330720, 330723		330745	
	Saloon (GY)	10/07-	M16A	75		330720, 330723		330745	
	Saloon (GY)	10/07-	M16A	79		330720, 330723		330745	
1.6 DDIS	(GY)	04/07-	9HX	66		330720, 330723		330745	
1.6 VVT	(GY)	06/06-	M16A	79	330009, 330567	330720, 330723		330745	
	(GY)	07/09-	M16A	88		330720, 330723		330745	
1.6 VVT 4x4	(GY)	06/06-	M16A	79	330009, 330567	330720, 330723		330745	
	(GY)	07/09-	M16A	88		330720, 330723		330745	
1.9 DDiS	(GY)	06/06-	D19AA	88		330720, 330723	330142	330745	
1.9 DDiS 4x4	(GY)	06/06-	D19AA	88		330720, 330723	330142	330745	
2.0	(GY)	06/06-	J20A	107		330723		330745	
	Saloon (GY)	10/07-01/10	J20A	107		330723		330745	
	(GY)	01/10-	J20B	112		330723		330745	
	Saloon (GY)	01/10-	J20B	112		330723		330745	
2.0 4x4	(GY)	06/06-	J20A	107		330723		330745	
2.0 16V 4x4	(GY)	01/10-	J20B	112		330723		330745	
2.0 DDiS	(GY)	07/09-	D20AA	99		330720, 330723		330745	
2.0 DDiS 4x4	(GY)	07/09-	D20AA	99		330720, 330723		330745	

OPS Oil Pressure Switches **BLS** Brake Light Switches **TT-RF** Temperature Transmitter and Radiator Fan Switches **RLS** Reverse Light Switches **VAR** Various

Vehicle		Date	Engine	kW	OPS	BLS	TT-RF	RLS	VAR
VITARA		**07/88 - 10/02**							
1.6	(ET, TA)	07/88-03/98	G16A	59	330009, 330567	330081	330099, 330100, 330130		
	Cabrio (ET, TA)	07/88-01/95	G16A	59	330009, 330567	330081	330099, 330100, 330130		
	(ET, TA)	07/88-12/91	G16A	60	330009, 330567	330081	330099, 330100, 330130		
1.6 i 16V	(ET, TA)	07/90-03/98	G16B	71	330009, 330567	330081	330099, 330100, 330130		
	Cabrio (ET, TA)	07/90-03/99	G16B	71	330009, 330567	330081	330099, 330100, 330130		
1.9 D	(ET, TA)	01/95-03/98	XUD9A	50	330023	330081	330639		
	Cabrio (ET, TA)	01/95-03/98	XUD9A	50	330023	330081	330639		
	(ET, TA)	08/96-03/98	XUD9SD	55	330023	330081	330575		
	Cabrio (ET, TA)	08/96-03/99	XUD9SD	55	330023	330081	330575		
2.0 16V	(ET, TA)	12/96-03/98	J20A	97	330009, 330567	330081	330099		
	Cabrio (ET, TA)	12/96-03/99	J20A	97	330009, 330567	330081	330099		
2.0 TD	(ET, TA)	12/94-03/98	RF	52	330008	330081	330087, 330130		
2.0 TD Intercooler	(ET, TA)	12/95-03/98	RF	64	330008	330081	330087, 330130		
2.0 V6 24V	(ET, TA)	12/94-03/98	H 20 A	100	330009, 330567	330081	330099		
WAGON R		**07/03 - 08/05**							
1.0		06/04-	Z 10 EXP	44	330009, 330567	330720, 330741		330745	
WAGON R+		**10/97 -**							
1.0	(EM)	02/98-05/00	K10A	48	330009, 330567	330081			
	(MM)	08/00-07/03	K10A	51	330009, 330567	330741		330745	
1.0 XT Plus	(MM)	08/00-07/01	--	74	330009, 330567	330741		330745	
1.2	(EM)	02/98-05/00	K12A	51	330009, 330567	330081			
1.2 4WD	(EM)	02/98-05/00	--	51	330009, 330567	330081			
1.3	(MM)	05/00-	G13BB	56	330009, 330567	330741		330745	
	(MM)	08/01-	M13A	65	330009, 330567	330741		330745	
	(MM)	09/03-	M13A	69	330009, 330567	330720, 330741		330745	
1.3 4WD	(MM)	10/01-	--	56	330009, 330567	330741		330745	
	(MM)	09/03-	M13A	69	330009, 330567	330720, 330741		330745	
1.3 DDiS	(MM)	09/03-	Z13DT	51		330720, 330741	330142	330244	
1.3 VVTi GL All-wheel Drive	(EM)	09/03-	M13A	69	330009, 330567	330720, 330741		330745	
X-90		**09/95 -**							
1.6 i 16V	(EL)	09/95-	G16B	71	330009, 330567	330081	330100, 330130		
1.6 i 16V 4x4	(EL)	09/95-	G16B	71	330009, 330567	330081	330100, 330130		

OPS Oil Pressure Switches **BLS** Brake Light Switches **TT-RF** Temperature Transmitter and Radiator Fan Switches **RLS** Reverse Light Switches **VAR** Various

ERA S.p.A. Moncalieri (TO) Italy - tel: +39 011 6891511 - fax: +39 011 6472862 - www.eranet.it

Vehicle		Date	Engine	kW	OPS	BLS	TT-RF	RLS	VAR
TALBOT									
SAMBA			**01/81 - 12/87**						
1.1	(51A)	01/81-06/86	XW7	37		330438	330167, 330531	330236	
SIMCA 1100			**10/68 - 01/80**						
1.1	Break/Tourisme	10/76-09/79	3E1A	44			330086, 330291		
SOLARA			**02/80 - 07/86**						
1.3		02/80-07/86	6G1D/VP	40			330086, 330291	330689	
TAGORA			**06/80 - 12/87**						
2.6		08/81-10/83	9L6	122				330237	
TOYOTA									
4 RUNNER			**08/87 - 03/96**						
2.4 TD 4x4	(_N130)	08/89-11/95	2L-T	66		330039, 330059	330093, 330130	330743	
2.7 i 4x4	(_N130)	11/95-03/96	3RZ-FE	112	330022	330059, 330703		330743	
3.0 4x4	(_N130)	01/90-08/92	3VZ-E	112		330039, 330059	330093, 330100, 330130	330743	
3.0 V6	(_N130)	07/90-11/95	3VZ-E	105		330039, 330059	330093, 330100, 330130	330743	
3.4 i 4x4	(_N130)	11/95-03/96	5VZ-FE	136	330022	330059, 330703	330100	330743	
ALTIS			**01/07 -**						
1.33	Saloon (E15_, E14_)	10/08-	1NR-FE	74		330723		330743	
1.4 D-4D	Saloon (E15_, E14_)	01/09-	1ND-TV	66		330723		330743	
1.6	Saloon (E15_, E14_)	01/09-	1ZR-FAE	97		330723		330743, 330749	
1.6 Dual VVTi	Saloon (E15_, E14_)	01/07-	1ZR-FE	91		330723		330743, 330749, 330752	
2.0 D-4D	Saloon (E15_, E14_)	01/07-	1AD-FTV	93		330723		330743, 330749	
AURIS			**10/06 -**						
1.33 Dual-VVTi	(_ZE15_, _RE15_)	05/09-	1NR-FE	74		330723		330743, 330749	
1.4 D-4D	(_ZE15_, _RE15_)	03/07-	1ND-TV	66		330723		330743, 330749, 330752	
1.4 VVTi	(_ZE15_, _RE15_)	03/07-	4ZZ-FE	71		330723		330743, 330749	
1.6	(_ZE15_, _RE15_)	05/09-	1ZR-FAE	97		330723		330743	
1.6 VVTi	(_ZE15_, _RE15_)	03/07-	1ZR-FE	91		330723		330743, 330749, 330752	
1.8	(_ZE15_, _RE15_)	02/09-	2ZR-FAE	108		330723		330743, 330749	
2.0 D-4D	(_ZE15_, _RE15_)	03/07-	1AD-FTV	93		330723		330743, 330749	
2.2 D	(_ZE15_, _RE15_)	03/07-	2AD-FHV	130		330723		330743, 330749	
AVENSIS			**09/97 -**						
1.6	(_T22_)	09/97-10/00	4A-FE	74	330022	330059	330116, 330130	330743	
	Liftback (_T22_)	09/97-10/00	4A-FE	74	330022	330059	330116, 330130	330743	
	Station Wagon (_T22_)	09/97-10/00	4A-FE	74	330022	330059	330116, 330130	330743	

OPS Oil Pressure Switches **BLS** Brake Light Switches **TT-RF** Temperature Transmitter and Radiator Fan Switches **RLS** Reverse Light Switches **VAR** Various

Vehicle		Date	Engine	kW	OPS	BLS	TT-RF	RLS	VAR
1.6	(_T22_)	09/97-10/00	4A-FE	81	330022	330059	330116, 330130	330743	
	Liftback (_T22_)	09/97-10/00	4A-FE	81	330022	330059	330116, 330130	330743	
	Station Wagon (_T22_)	09/97-10/00	4A-FE	81	330022	330059	330116, 330130	330743	
	Estate (T27)	02/09-	1ZR-FAE	97		330738		330743	
	Saloon (T27)	02/09-	1ZR-FAE	97		330738		330743	
1.6 VVT-i	(T25)	04/03-	3ZZ-FE	81	330022	330723	330130	330743	
	(_T22_)	10/00-02/03	3ZZ-FE	81	330022	330059	330130		
	Estate (T25)	04/03-	3ZZ-FE	81	330022	330723	330130	330743	
	Liftback (_T22_)	10/00-02/03	3ZZ-FE	81	330022	330059	330130		
	Saloon (T25)	04/03-	3ZZ-FE	81	330022	330723	330130	330743	
	Station Wagon (_T22_)	10/00-02/03	3ZZ-FE	81	330022	330059	330130		
1.8	(_T22_)	09/97-10/00	7A-FE	81	330022	330059	330130	330743	
	Liftback (_T22_)	09/97-10/00	7A-FE	81	330022	330059	330130	330743	
	Station Wagon (_T22_)	09/97-10/00	7A-FE	81	330022	330059	330130	330743	
	(T25)	04/03-	1ZZ-FE	95	330022	330723	330130	330743	
	Estate (T25)	04/03-	1ZZ-FE	95	330022	330723	330130	330743	
	Saloon (T25)	04/03-	1ZZ-FE	95	330022	330723	330130	330743	
	Estate (T27)	02/09-	2ZR-FAE	108		330738		330743	
	Saloon (T27)	02/09-	2ZR-FAE	108		330738		330743	
1.8 VVT-i	(_T22_)	10/00-02/03	1ZZ-FE	95	330022	330059	330130		
	Liftback (_T22_)	10/00-02/03	1ZZ-FE	95	330022	330059	330130		
	Station Wagon (_T22_)	10/00-02/03	1ZZ-FE	95	330022	330059	330130		
1.9 D	Station Wagon (_T22_)	10/97-05/98	2C-T	61				330743	
	(_T22_)	09/02-02/03	1CD-FTV	85				330743	
	Station Wagon (_T22_)	09/02-02/03	1CD-FTV	85				330743	
2.0	(_T22_)	09/97-10/00	3S-FE	94	330022	330059	330130	330743	
	Liftback (_T22_)	09/97-10/00	3S-FE	94	330022	330059	330130	330743	
	Station Wagon (_T22_)	09/97-10/00	3S-FE	94	330022	330059	330130	330743	
	(T25)	04/03-	1AZ-FSE	108	330022	330723	330130	330743	
	Estate (T25)	04/03-	1AZ-FSE	108	330022	330723	330130	330743	
	Saloon (T25)	04/03-	1AZ-FSE	108	330022	330723	330130	330743	
	Estate (T27)	02/09-	3ZR-FAE	112		330738		330743	
	Saloon (T27)	02/09-	3ZR-FAE	112		330738		330743	
2.0 D	(_T22_)	10/97-05/98	2C-T	61				330743	
	Liftback (_T22_)	10/97-05/98	2C-T	61				330743	
	Liftback (_T22_)	09/02-02/03	1CD-FTV	85				330743	
2.0 D-4D	(_T22_)	10/99-02/03	1CD-FTV	81	330022	330059	330130	330743	
	Liftback (_T22_)	10/99-02/03	1CD-FTV	81	330022	330059	330130	330743	
	Station Wagon (_T22_)	10/99-02/03	1CD-FTV	81	330022	330059	330130	330743	
	(T25)	04/03-	1CD-FTV	85	330022	330723	330130	330743	
	Estate (T25)	04/03-	1CD-FTV	85	330022	330723	330130	330743	

OPS Oil Pressure Switches **BLS** Brake Light Switches **TT-RF** Temperature Transmitter and Radiator Fan Switches **RLS** Reverse Light Switches **VAR** Various

ERA S.p.A. Moncalieri (TO) Italy - tel: +39 011 6891511 - fax: +39 011 6472862 - www.eranet.it

Vehicle		Date	Engine	kW	OPS	BLS	TT-RF	RLS	VAR
2.0 D-4D	Saloon (T25)	04/03-	1CD-FTV	85	330022	330723	330130	330743	
	(T25)	03/06-	1AD-FTV	93		330723		330743	
	Estate (T25)	03/06-	1AD-FTV	93		330723		330743	
	Estate (T27)	02/09-	1AD-FTV	93		330738		330743	
	Saloon (T25)	03/06-	1AD-FTV	93		330723		330743	
	Saloon (T27)	02/09-	1AD-FTV	93		330738		330743	
2.0 TD	(_T22_)	09/97-02/03	2C-TE	66	330022	330059	330093, 330130	330743	
	Liftback (_T22_)	09/97-02/03	2C-TE	66	330022	330059	330093, 330130	330743	
	Station Wagon (_T22_)	09/97-02/03	2C-TE	66	330022	330059	330093, 330130	330743	
2.0 VVT-i	(_T22_)	10/00-02/03	1AZ-FSE	110	330022	330703	330130	330743	
	Liftback (_T22_)	10/00-02/03	1AZ-FSE	110	330022	330703	330130	330743	
	Station Wagon (_T22_)	10/00-02/03	1AZ-FSE	110	330022	330703	330130	330743	
2.0 VVTi	(T25)	03/03-	1AZ-FE	114		330723		330743	
	Saloon (T25)	03/03-	1AZ-FE	114		330723		330743	
2.2 D-4D	(T25)	10/05-	2AD-FTV	110	330022	330723		330743	
	Estate (T25)	10/05-	2AD-FTV	110	330022	330723		330743	
	Estate (T27)	02/09-	2AD-FHV	110		330738		330743	
	Saloon (T25)	10/05-	2AD-FTV	110	330022	330723		330743	
	Saloon (T27)	02/09-	2AD-FHV	110		330738		330743	
	Estate (T27)	02/09-	2AD-FHV	130		330738		330743	
	Saloon (T27)	02/09-	2AD-FHV	130		330738		330743	
2.2 D-CAT	(T25)	07/05-	2AD-FHV	130	330022	330723		330743	
	Estate (T25)	07/05-	2AD-FHV	130	330022	330723		330743	
	Saloon (T25)	07/05-	2AD-FHV	130	330022	330723		330743	
2.4	(T25)	10/03-	2AZ-FSE	120	330022	330723	330130	330743	
	Estate (T25)	10/03-	2AZ-FSE	120	330022	330723	330130	330743	
	Saloon (T25)	10/03-	2AZ-FSE	120	330022	330723	330130	330743	
	(T25)	09/03-	2AZ-FSE	125	330022	330723	330130	330743	
	Estate (T25)	09/03-	2AZ-FSE	125	330022	330723	330130	330743	
	Saloon (T25)	09/03-	2AZ-FSE	125	330022	330723	330130	330743	
AVENSIS VERSO			**08/01 -**						
2.0 D-4D	(_ACM2_)	08/01-	1CD-FTV	85	330022	330059, 330723	330130	330743	
2.0 VVT-i	(_ACM2_)	08/01-	1AZ-FE	110	330022	330723	330130	330743	
2.4 VVTi 4x4	(_ACM2_)	11/03-08/06	2AZ-FE	115		330723			
2.4 VVTi GLS	(_ACM2_)	10/03-	2AZ-FE	115		330723			
AYGO			**07/05 -**						
1.0	(B10)	07/05-	1KR-FE	50	330022	330723		330752	
1.4 HDi	(B10)	07/05-	2WZ-TV	40	330026	330723	330502		
CAMRY			**10/86 -**						
2.0	(_V2_)	11/86-05/91	3S-FE	94	330015	330039	330135		

OPS Oil Pressure Switches **BLS** Brake Light Switches **TT-RF** Temperature Transmitter and Radiator Fan Switches **RLS** Reverse Light Switches **VAR** Various

Vehicle		Date	Engine	kW	OPS	BLS	TT-RF	RLS	VAR
2.0 Gli 16V	(_V2_)	11/86-05/91	3S-FE	89	330015	330039	330135		
2.0 GLi 16V	Station Wagon (_V2_)	11/86-05/91	3S-FE	89	330015	330039	330135		
2.0 GLi 4x4	(_V2_)	10/87-07/88	3S-FE	88	330015	330039	330135		
2.0 Turbo-D	(_V2_)	11/86-05/91	2C-T	62	330009, 330567	330039, 330081	330093, 330130, 330135		
	Station Wagon (_V2_)	11/86-05/91	2C-T	62	330009, 330567	330039, 330081	330093, 330130, 330135		
	(_V2_)	11/88-05/91	2C-T	63	330009, 330567	330039, 330081	330093, 330130, 330135		
	Station Wagon (_V2_)	11/88-05/91	2C-T	63	330009, 330567	330039, 330081	330093, 330130, 330135		
2.0 VVTI	(_XV3_)	08/01-	1AZ-FE	110	330022	330703			
2.2	(_CV2_, _XV2_)	11/00-11/01	5S-FE	93	330022	330059, 330703	330130	330743	
	(_CV2_, _XV2_)	08/96-11/01	5S-FE	96	330022	330059, 330703	330130	330743	
	(_CV1_, _XV1_, _V1_)	06/91-08/96	5S-FE	100	330015, 330022	330059, 330703	330093	330743	
	Station Wagon (_XV1_, _CV1_, _V10)	03/92-07/96	5S-FE	100	330015, 330022	330059, 330703	330093	330743	
2.4 VVT-i	(_XV3_)	11/01-	2AZ-FE	112	330022	330703		330743	
2.4 VVTi	Saloon (_XV4_)	01/06-	2AZ-FE	116		330723		330743	
2.4 VVTi LE	(_XV3_)	01/06-	2AZ-FE	116		330723		330743	
2.5 V6 GXI	(_V2_)	02/88-05/91	2VZ-FE	118	330015	330039, 330081	330093, 330130	330743	
3.0	(_CV1_, _XV1_, _V1_)	06/91-08/96	3VZ-FE	138	330015, 330022	330059, 330703	330100	330743	
	Station Wagon (_XV1_, _CV1_, _V10)	03/92-07/96	3VZ-FE	138	330015, 330022	330059, 330703	330100	330743	
3.0 24V	(_CV2_, _XV2_)	08/96-11/01	1MZ-FE	140	330022	330059, 330703	330130		
3.0 V6	(_CV2_, _XV2_)	08/96-11/01	1MZ-FE	135	330022	330059, 330703	330130		
	(_XV3_)	11/01-	1MZ-FE	137	330022	330703	330130		
3.5 VVTi XLE	(_XV3_)	01/06-	2GR-FE	197		330723			
CAMRY SOLARA			**04/00 -**						
2.4	Convertible	04/00-	2AZ-FE	117		330703		330743	
	Coupe	04/00-	2AZ-FE	117		330703		330743	
CARINA			**12/87 - 09/97**						
1.6	II (_T17_)	12/87-11/89	4A-F	66	330008	330039	330100, 330130	330743	
	II Saloon (_T17_)	12/87-08/90	4A-F	66	330008	330039	330100, 330130	330743	
	II Station Wagon (_T17_)	12/87-12/89	4A-F	66	330008	330039	330100, 330130	330743	
	II (_T17_)	12/87-03/92	4A-FE	72	330008	330039	330100, 330130	330743	
	E (_T19_)	12/93-09/97	4A-FE	73	330022	330059	330116, 330130	330743	
	E Saloon (_T19_)	01/95-09/97	4A-FE	73	330022	330059	330116, 330130	330743	
	II (_T17_)	12/87-03/92	4A-FE	75	330008	330039	330100, 330130	330743	
	II Station Wagon (_T17_)	12/87-03/92	4A-FE	75	330008	330039	330100, 330130	330743	
	E Saloon (_T19_)	10/95-09/97	4A-FE	78	330022	330059	330116, 330130	330743	
	E Saloon (_T19_)	01/93-09/97	4A-FE	79	330022	330059	330116, 330130	330743	
	E (_T19_)	12/93-09/97	4A-FE	85	330022	330059	330116, 330130	330743	
1.6 4x4	II (_T17_)	06/88-03/92	4A-FE	77				330743	

OPS Oil Pressure Switches **BLS** Brake Light Switches **TT-RF** Temperature Transmitter and Radiator Fan Switches **RLS** Reverse Light Switches **VAR** Various

ERA S.p.A. Moncalieri (TO) Italy - tel: +39 011 6891511 - fax: +39 011 6472862 - www.eranet.it

Vehicle		Date	Engine	kW	OPS	BLS	TT-RF	RLS	VAR
1.6 16V	E (_T19_)	10/95-09/97	4A-FE	78	330022	330059	330116, 330130	330743	
	E Saloon (_T19_)	12/94-09/97	4A-FE	85	330022	330059	330116, 330130	330743	
1.6 GLI	E (_T19_)	04/92-09/97	4A-FE	79	330022	330059	330116, 330130	330743	
	E Saloon (_T19_)	04/92-09/97	4A-FE	79	330022	330059	330116, 330130		
	E Sportswagon (_T19_)	01/93-09/97	4A-FE	79	330022	330059	330116, 330130	330743	
1.6 i	E Sportswagon (_T19_)	02/95-09/97	4A-FE	73	330022	330059	330116, 330130	330743	
1.8	E (_T19_)	01/95-09/97	7A-FE	79	330022	330059	330130	330743	
	E Saloon (_T19_)	04/92-09/97	7A-FE	85	330022	330059	330130	330743	
1.8 i	E Sportswagon (_T19_)	02/95-09/97	7A-FE	79	330022	330059	330130	330743	
1.8 i 16V	E Saloon (_T19_)	01/95-09/97	7A-FE	79	330022	330059	330130	330743	
2.0	II Station Wagon (_T17_)	12/87-04/92	3S-FE	89	330015	330039	330100, 330130	330743	
	E Saloon (_T19_)	01/93-09/97	3S-FE	98	330022	330059	330130	330743	
2.0 D	E (_T19_)	04/92-01/96	2C	54	330008	330059	330093, 330130	330743	
	E Saloon (_T19_)	08/92-01/96	2C	54	330008	330059	330093, 330130	330743	
	E Sportswagon (_T19_)	01/93-01/96	2C	54	330008	330059	330093, 330130	330743	
	II (_T17_)	03/88-06/93	2C-L	54				330743	
	II Station Wagon (_T17_)	12/87-01/92	2C-L	54				330743	
2.0 GLI	II (_T17_)	12/87-03/92	3S-FE	89	330015	330039	330100, 330130	330743	
2.0 GLi	II (_T17_)	12/87-03/92	3S-FE	94	330015	330039	330100, 330130	330743	
	II Station Wagon (_T17_)	12/87-03/92	3S-FE	94	330015	330039	330100, 330130	330743	
2.0 GLI	E (_T19_)	04/92-09/97	3S-FE	98	330022	330059	330130	330743	
	E Saloon (_T19_)	04/92-09/97	3S-FE	98	330022	330059	330130		
	E Sportswagon (_T19_)	01/93-09/97	3S-FE	98	330022	330059	330130	330743	
2.0 GTi	E (_T19_)	04/92-02/94	3S-GE	116	330022	330059	330130	330743	
	E Saloon (_T19_)	04/92-02/94	3S-GE	116	330022	330059	330130	330743	
2.0 GTi 16V	E (_T19_)	03/94-09/97	3S-GE	129	330022	330059	330130	330743	
	E Saloon (_T19_)	03/94-09/97	3S-GE	129	330022	330059	330130	330743	
2.0 i	E (_T19_)	12/93-09/97	3S-FE	93	330022	330059	330130	330743	
	E Saloon (_T19_)	12/92-09/97	3S-FE	93	330022	330059	330130	330743	
	E Sportswagon (_T19_)	05/95-09/97	3S-FE	93	330022	330059	330130	330743	
2.0 TD	E (_T19_)	01/96-09/97	2C-T	61	330008	330059	330093, 330130	330743	
	E Saloon (_T19_)	01/96-09/97	2C-T	61	330008	330059	330093, 330130	330743	
	E Sportswagon (_T19_)	01/96-09/97	2C-T	61	330008	330059	330093, 330130	330743	
CELICA		**08/85 -**							
1.6	(ST16_)	04/86-02/90	4A-L	63		330039	330093, 330130, 330135		
	Hatchback (T16)	04/86-02/90	4A-L	63		330039	330093, 330130, 330135		
1.6 GT	Hatchback (T16)	08/87-08/89	4A-GELC	85		330039	330093, 330130, 330135		
1.6 GT 16V	(ST16_)	04/86-08/89	4A-GEL	91		330039	330093, 330130, 330135		
	Hatchback (T16)	09/85-08/89	4A-GEL	91		330039	330093, 330135		

OPS Oil Pressure Switches **BLS** Brake Light Switches **TT-RF** Temperature Transmitter and Radiator Fan Switches **RLS** Reverse Light Switches **VAR** Various

Vehicle		Date	Engine	kW	OPS	BLS	TT-RF	RLS	VAR
1.6 STI	Coupe (_T18_)	10/89-01/94	4A-FE	77	330008	330059, 330081	330100, 330130	330743	
1.8 16V TS	(ZZT23_)	11/99-	2ZZ-GE	141	330022	330059, 330703, 330723	330130		
1.8 16V VT-i	(ZZT23_)	11/99-	1ZZ-FE	105	330022	330059, 330703, 330723	330130		
1.8 i 16V	(_T20_)	11/93-11/99	7A-FE	85	330022	330059	330130	330743	
2.0	Coupe (T16F)	08/87-08/89	3S-GELC	103	330015	330039	330093, 330130, 330135	330743	
2.0 GT	Convertible (_T16_)	10/86-08/90	3S-GELC	103	330015	330039	330093, 330130, 330135	330743	
	Hatchback (T16)	09/85-08/89	3S-GELC	103	330015	330039	330093, 330130, 330135	330743	
	Convertible (_T16_)	10/86-08/90	3S-GEL	110	330015	330039	330093, 330130, 330135	330743	
	Hatchback (T16)	08/85-08/89	3S-GEL	110	330015	330039	330093, 330130, 330135	330743	
2.0 GTi	Convertible (_T18_)	05/91-01/94	3S-GE	115	330015	330059, 330081	330093, 330130	330743	
	Coupe (_T18_)	10/89-01/94	3S-GE	115	330015	330059, 330081	330093, 330130	330743	
2.0 i 16V	(_T20_)	04/96-11/99	3S-GE	125	330022	330059	330130	330743	
	Convertible (_T20_)	04/96-11/99	3S-GE	125	330022	330059	330130	330743	
	(_T20_)	11/93-11/99	3S-GE	129	330022	330059	330130	330743	
2.0 i Turbo 4WD	(_T20_)	02/94-11/99	3S-GTE	178	330022	330059	330130	330743	
2.0 Turbo 4WD	Coupe (_T18_)	10/89-01/94	3S-GTE	150	330015	330059, 330081	330093, 330130	330743	
	Coupe (_T18_)	10/89-01/94	3S-GTE	153	330015	330059, 330081	330093, 330130	330743	
2.0 Turbo 4x4	Coupe (T16F)	03/88-08/90	3S-GTE	136		330039	330093, 330130, 330135	330743	
COROLLA		**09/79 -**							
1.3	Compact (_E9_)	08/87-12/89	2E	55	330015	330039	330100, 330130	330743	
	Station Wagon (_E9_)	12/87-12/89	2E	55	330015	330039	330100, 330130	330743	
1.3 12V	(_E10_)	07/92-04/97	2E	53	330022	330059	330100	330743	
	Compact (_E10_)	07/92-05/95	2E	53	330022	330059	330100	330743	
	Liftback (_E10_)	07/92-05/95	2E	53	330022	330059	330100	330743	
	Wagon (_E10_)	07/92-05/95	2E	53	330022	330059	330100	330743	
1.3 i	(_E9_)	08/87-12/92	2E, 2E-E	55	330015	330039	330100, 330130	330743	
	Compact (_E9_)	06/89-04/92	2E-E	55	330015	330039	330100, 330130	330743	
	Liftback (_E9_)	08/87-04/92	2E, 2E-E	55	330015	330039	330100, 330130	330743	
	Station Wagon (_E9_)	06/89-06/92	2E-E	55	330015	330039	330100, 330130	330743	
1.3 XLI	(_E10_)	09/95-04/97	4E-FE	55	330022	330059	330100, 330130	330743	
	Compact (_E10_)	09/95-04/97	4E-FE	55	330022	330059	330100, 330130	330743	
	Wagon (_E10_)	09/95-04/97	4E-FE	55	330022	330059	330100, 330130	330743	
	Liftback (_E10_)	07/92-04/97	4E-FE	65	330022	330059	330100, 330130	330743	
1.3 XLI 16V	(_E10_)	07/92-09/95	4E-FE	65	330022	330059	330100, 330130	330743	
	Compact (_E10_)	07/92-09/95	4E-FE	65	330022	330059	330100, 330130	330743	
	Wagon (_E10_)	07/92-09/95	4E-FE	65	330022	330059	330100, 330130	330743	
1.4	(_E11_)	04/97-02/00	4E-FE	63	330022	330059		330743	

OPS Oil Pressure Switches **BLS** Brake Light Switches **TT-RF** Temperature Transmitter and Radiator Fan Switches **RLS** Reverse Light Switches **VAR** Various

ERA S.p.A. Moncalieri (TO) Italy - tel: +39 011 6891511 - fax: +39 011 6472862 - www.eranet.it

Vehicle		Date	Engine	kW	OPS	BLS	TT-RF	RLS	VAR
1.4	Compact (_E11_)	04/97-02/00	4E-FE	63	330022	330059		330743	
	Liftback (_E11_)	04/97-02/00	4E-FE	63	330022	330059		330743	
	Wagon (__E11_)	04/97-02/00	4E-FE	63	330022	330059		330743	
	Compact (_E11_)	02/00-01/02	4ZZ-FE	71	330022	330059		330743	
	Liftback (_E11_)	02/00-01/02	4ZZ-FE	71	330022	330059		330743	
1.4 16V	(_E11_)	02/00-01/02	4ZZ-FE	71	330022	330059		330743	
	Wagon (__E11_)	02/00-01/02	4ZZ-FE	71	330022	330059		330743	
1.4 D	(_E12U_, _E12J_)	07/04-	1ND-TV	66	330022	330703		330743, 330752	
	Estate (_E12J_, _E12T_)	07/04-	1ND-TV	66	330022	330703		330743, 330752	
	Saloon (_E12J_, _E12T_)	07/04-	1ND-TV	66	330022	330703		330743, 330752	
1.4 VVT-i	(_E12U_, _E12J_)	01/02-	4ZZ-FE	71	330022	330059	330130	330743	
	Estate (_E12J_, _E12T_)	01/02-	4ZZ-FE	71	330022	330059	330130	330743	
	Saloon (_E12J_, _E12T_)	08/02-	4ZZ-FE	71	330022	330059	330130	330743	
	Verso (_E12J_)	01/02-05/04	4ZZ-FE	71				330743	
1.6	(_E8_)	08/85-08/87	4A-LC	53	330015	330039	330093		
	(_E8_)	12/85-05/88	4A-LC	54	330015	330039	330093		
	FX Compact (E8B)	01/87-09/87	4A-LC	54	330015	330039	330093		
	Liftback (_E8_)	08/85-08/87	4A-LC	54	330015	330039	330093		
	FX Compact (E8B)	08/84-08/87	4A-C	55	330015	330039	330093		
	(_E9_)	08/87-12/89	4A-F	66	330008	330039	330100, 330130, 330135	330743	
	Compact (_E9_)	08/87-04/92	4A-F	66	330008	330039	330100, 330130, 330135	330743	
	Liftback (_E9_)	08/87-04/92	4A-F	66	330008	330039	330100, 330130, 330135	330743	
	Station Wagon (_E9_)	02/88-05/92	4A-F	66	330008	330039	330100, 330130, 330135	330743	
	Liftback (_E9_)	08/89-04/92	4A-FE	77	330008	330039	330093, 330100, 330130	330743	
	(_E11_)	04/97-02/00	4A-FE	81	330022	330059	330130	330743	
	Compact (_E11_)	04/97-02/00	4A-FE	81	330022	330059	330130	330743	
	Compact (_E11_)	02/00-01/02	3ZZ-FE	81	330022	330059		330743	
	Liftback (_E11_)	04/97-02/00	4A-FE	81	330022	330059	330130	330743	
	Liftback (_E11_)	02/00-01/02	3ZZ-FE	81	330022	330059		330743	
	Verso (ZER_, ZZE_, R1_)	04/04-	3ZZ-FE	81	330022	330723	330130	330743	
	Wagon (__E11_)	04/97-02/00	4A-FE	81	330022	330059	330130	330743	
	Saloon (_E12J_, _E12T_)	11/06-	1ZR-FE	91		330723		330743, 330749, 330752	
1.6 4x4	Liftback (_E9_)	09/89-05/92	4A-FE	77	330008	330039	330093, 330100, 330130	330743	
1.6 All-wheel Drive	(_E9_)	08/87-08/89	4A-F	66				330743	
	Liftback (_E9_)	08/87-08/89	4A-F	66				330743	
1.6 16V	(_E11_)	02/00-01/02	3ZZ-FE	81	330022	330059		330743	
	Wagon (__E11_)	02/00-01/02	3ZZ-FE	81	330022	330059		330743	
	Coupe (AE86)	12/85-04/87	4A-GEC	85	330015	330039	330093, 330135		

OPS Oil Pressure Switches **BLS** Brake Light Switches **TT-RF** Temperature Transmitter and Radiator Fan Switches **RLS** Reverse Light Switches **VAR** Various

Vehicle		Date	Engine	kW	OPS	BLS	TT-RF	RLS	VAR
1.6 Aut.	(_E11_)	04/97-02/00	4A-FE	79	330022	330059	330130	330743	
	Compact (_E11_)	04/97-02/00	4A-FE	79	330022	330059	330130	330743	
	Liftback (_E11_)	04/97-02/00	4A-FE	79	330022	330059	330130	330743	
	Wagon (__E11_)	04/97-02/00	4A-FE	79	330022	330059	330130	330743	
1.6 GL 4x4	(_E9_)	10/87-08/90	4A-F	70	330008	330039	330100, 330130, 330135	330743	
	Compact (_E9_)	10/87-08/90	4A-F	70	330008	330039	330100, 330130, 330135	330743	
1.6 GLI	Liftback (_E10_)	07/92-04/97	4A-FE	84	330008, 330022	330059	330130	330743	
1.6 GTi	Compact (_E9_)	08/87-04/92	4A-GE	85	330008	330039	330093, 330130, 330135		
1.6 i	(_E9_)	11/89-06/93	4A-FE	77	330008	330039	330093, 330100, 330130	330743	
	Compact (_E9_)	08/89-04/92	4A-FE	77	330008	330039	330093, 330100, 330130	330743	
1.6 Si	(_E10_)	09/95-04/97	4A-FE	84	330008, 330022	330059	330130	330743	
	Compact (_E10_)	07/92-04/97	4A-FE	84	330008, 330022	330059	330130	330743	
	Wagon (_E10_)	07/92-04/97	4A-FE	84	330008, 330022	330059	330130	330743	
1.6 SR 16V	Coupe (AE86)	05/83-04/87	4A-C	57	330015	330039	330093		
1.6 VVT-i	(_E12U_, _E12J_)	01/02-	3ZZ-FE	81	330022	330059, 330703	330130	330743	
	Estate (_E12J_, _E12T_)	01/02-	3ZZ-FE	81	330022	330059, 330703	330130	330743	
	Saloon (_E12J_, _E12T_)	08/02-	3ZZ-FE	81	330022	330059, 330703	330130	330743	
	Verso (_E12J_)	01/02-05/04	3ZZ-FE	81	330022		330130	330743	
1.6 VVTi	(_E12U_, _E12J_)	10/06-	1ZR-FE	91		330723		330743, 330749, 330752	
1.6 XL	(_E9_)	09/89-04/92	4A-F	70	330008	330039	330100, 330130, 330135	330743	
	Compact (_E9_)	09/89-04/92	4A-F	70	330008	330039	330100, 330130, 330135	330743	
1.6 XLI	Station Wagon (_E9_)	11/89-06/92	4A-FE	77	330008	330039	330100, 330130, 330135	330743	
1.8	Hatchback (_E7_)	09/79-05/82	3T-C	57	330009, 330567	330040, 330042	330093		
	Verso (ZER_, ZZE_, R1_)	04/04-	1ZZ-FE	95	330022	330723	330130	330743	
1.8 AWD	Wagon (__E11_)	04/97-01/02	7A-FE	81	330022	330059	330130	330743	
1.8 16V 4WD	Wagon (_E10_)	09/95-04/97	7A-FE	81	330022	330059	330130	330743	
1.8 D	(_E7_)	01/83-09/83	1C	43	330008	330039, 330040, 330042	330093		
	(_E8_)	06/83-05/88	1C	43	330008	330039, 330040, 330042	330093		
	FX Compact (E8B)	01/85-05/88	1C	43	330008	330039, 330040, 330042	330093		
	Liftback (_E8_)	06/83-05/88	1C	43	330008	330039, 330040, 330042	330093		
	Station Wagon (_E7_)	05/83-08/87	1C	44	330008	330039, 330040, 330042	330093		
	(_E9_)	07/87-06/93	1C	47	330008	330039	330093, 330135	330743	
	Compact (_E9_)	08/87-04/92	1C	47	330008	330039	330093, 330135	330743	
	Liftback (_E9_)	08/87-04/92	1C	47	330008	330039	330093, 330135	330743	
	Station Wagon (_E9_)	12/87-06/92	1C	47	330008	330039	330093, 330135	330743	

OPS Oil Pressure Switches **BLS** Brake Light Switches **TT-RF** Temperature Transmitter and Radiator Fan Switches **RLS** Reverse Light Switches **VAR** Various

ERA S.p.A. Moncalieri (TO) Italy - tel: +39 011 6891511 - fax: +39 011 6472862 - www.eranet.it

Vehicle		Date	Engine	kW	OPS	BLS	TT-RF	RLS	VAR
1.8 D	(_E9_)	11/89-06/93	1C	49	330008	330039	330093, 330135	330743	
	Compact (_E9_)	08/89-04/92	1C	49	330008	330039	330093, 330135	330743	
	Liftback (_E9_)	08/89-04/92	1C	49	330008	330039	330093, 330135	330743	
	Station Wagon (_E9_)	08/89-06/92	1C	49	330008	330039	330093, 330135	330743	
1.8 GT	Compact (_E10_)	11/92-05/95	7A-FE	86	330022	330059	330130	330743	
	Liftback (_E10_)	11/92-05/95	7A-FE	86	330022	330059	330130	330743	
1.8 VVT-i	Verso (_E12J_)	01/02-05/04	1ZZ-FE	99	330022		330130	330743	
1.8 VVTi All-wheel Drive	Verso (_E12J_)	10/01-02/04	1ZZ-FE	99				330743	
1.8 VVTL-i TS	(_E12U_, _E12J_)	01/02-	2ZZ-GE	141	330022	330059	330130	330743	
	(_E12U_, _E12J_)	02/05-	2ZZ-GE	165	330022	330059	330130	330743	
1.9 D	(_E11_)	02/00-01/02	1WZ	51	330026	330059	330624	330681	
	Compact (_E11_)	02/00-01/02	1WZ	51	330026	330059	330624	330681	
	Liftback (_E11_)	02/00-01/02	1WZ	51	330026	330059	330624	330681	
	Wagon (__E11_)	02/00-01/02	1WZ	51	330026	330059	330624	330681	
2.0 D	(_E10_)	07/92-04/97	2C	53	330022	330059	330093, 330130	330743	
	(_E11_)	04/97-02/00	2C-E	53	330022	330059	330093, 330130	330743	
	Compact (_E10_)	07/92-04/97	2C	53	330022	330059	330093, 330130	330743	
	Compact (_E11_)	04/97-02/00	2C-E	53	330022	330059	330093, 330130	330743	
	Liftback (_E10_)	07/92-04/97	2C	53	330022	330059	330093, 330130	330743	
	Liftback (_E11_)	04/97-02/00	2C-E	53	330022	330059	330093, 330130	330743	
	Wagon (_E10_)	07/92-04/97	2C	53	330022	330059	330093, 330130	330743	
	Wagon (__E11_)	04/97-02/00	2C-E	53	330022	330059	330093, 330130	330743	
2.0 D-4D	(_E11_)	09/00-01/02	1CD-FTV	66	330022	330059		330743	
	(_E12U_, _E12J_)	01/02-	1CD-FTV	66	330022	330703	330130	330743	
	Compact (_E11_)	09/00-01/02	1CD-FTV	66	330022	330059		330743	
	Estate (_E12J_, _E12T_)	01/02-	1CD-FTV	66	330022	330703	330130	330743	
	Liftback (_E11_)	09/00-01/02	1CD-FTV	66	330022	330059		330743	
	Saloon (_E12J_, _E12T_)	08/02-	1CD-FTV	66	330022	330703	330130	330743	
	Verso (_E12J_)	01/02-05/04	1CD-FTV	66	330022	330723	330130	330743	
	Wagon (__E11_)	09/00-01/02	1CD-FTV	66	330022	330059		330743	
	(_E11_)	08/00-10/01	1CD-FTV	81	330022	330059		330743	
	(_E12U_, _E12J_)	01/02-	1CD-FTV	81	330022	330703	330130	330743	
	Compact (_E11_)	08/00-10/01	1CD-FTV	81	330022	330059		330743	
	(_E12U_, _E12J_)	05/03-	1CD-FTV	85	330022	330703	330130	330743	
	Estate (_E12J_, _E12T_)	04/04-	1CD-FTV	85	330022	330703	330130	330743	
	Verso (ZER_, ZZE_, R1_)	04/04-	1CD-FTV	85	330022	330723	330130	330743	
2.0 D4d	Saloon (_E12J_, _E12T_)	06/04-	1CD-FTV	85		330703		330743	
	Verso (_E12J_)	06/04-	1CD-FTV	85		330723		330743	
2.0 D4d GS	Wagon (__E11_)	08/00-10/01	1CD-FTV	81	330022	330059		330743	
2.2 D-4D	Verso (ZER_, ZZE_, R1_)	10/05-	2AD-FTV	100	330022	330723		330743	
	Verso (ZER_, ZZE_, R1_)	10/05-	2AD-FHV	130	330022	330738		330743	

OPS Oil Pressure Switches **BLS** Brake Light Switches **TT-RF** Temperature Transmitter and Radiator Fan Switches **RLS** Reverse Light Switches **VAR** Various

Vehicle		Date	Engine	kW	OPS	BLS	TT-RF	RLS	VAR
CRESSIDA			**10/88 - 01/93**						
3.0	Estate	10/88-09/92	7M-GE	147		330703			
	Saloon	10/88-09/92	7M-GE	147		330703			
DYNA			**08/01 -**						
2.5 D4d	Flatbed / Chassis (_U4_, KD_, LY_, TRY2_, KDY2_)	08/01-	2KD-FTV	65				330743	
	Flatbed / Chassis (_U4_, KD_, LY_, TRY2_, KDY2_)	08/01-	2KD-FTV	75				330743	
3.0 D4d	Flatbed / Chassis (_U4_, KD_, LY_, TRY2_, KDY2_)	08/01-	5L	65				330743	
	Flatbed / Chassis (_U4_, KD_, LY_, TRY2_, KDY2_)	09/06-	1KD-FTV	80				330743	
DYNA 150			**08/85 - 07/01**						
2.0	Flatbed / Chassis	08/85-08/88	3Y	79				330743	
2.8 D	Flatbed / Chassis (LY_)	05/95-08/98	3L	61				330743	
3.0 D	Flatbed / Chassis (LY_)	09/98-07/01	5L	65				330743	
ESTIMA			**02/00 - 12/05**						
2.0 TDi	II	10/03-12/05	1CD-FTV	85		330703, 330723		330743	
2.4 VVTi	II	02/00-12/05	2AZ-FE	115		330703, 330723, 330738		330743	
HIACE			**03/83 -**						
1.8	II Box (H20)	03/83-11/89	2Y	58	330009, 330567	330040, 330042	330093		
	II Wagon (H20)	03/83-11/89	2Y	58	330009, 330567	330040, 330042	330093		
2.0	II Box (H20)	01/84-11/89	3Y	65	330009, 330567	330040, 330042	330093		
	II Wagon (H20)	01/85-08/89	3Y	65	330009, 330567	330040, 330042	330093		
	III Box (H50)	02/90-08/95	1RZ	74	330015, 330022	330040, 330042, 330059	330093		
	III Wagon (H50)	08/89-08/95	1RZ	74	330015, 330022	330040, 330042, 330059	330093		
	IV Wagon (H100)	08/95-04/98	1RZ	74				330743	
	IV Box (H100)	11/96-10/00	1RZ-E	81				330743	
	IV Wagon (H100)	11/96-10/00	1RZ-E	81				330743	
2.0 4x4	II Wagon (H20)	08/87-07/89	3Y	65	330009, 330567	330040, 330042	330093		
2.2	II Box (H20)	09/87-08/89	4Y	69	330009, 330567	330040, 330042	330093		
2.2 4x4	II Box (H20)	09/87-08/89	4Y	69	330009, 330567	330040, 330042	330093		
2.4	IV Box	08/95-04/98	2RZ-E	85	330022	330059	330130	330743	
	IV Wagon	08/95-04/98	2RZ-E	85	330022	330059	330130	330743	
	IV Wagon (H100)	11/96-09/06	2RZ-E	85				330743	
	III Box (H50)	08/89-08/95	2RZ-E	88	330015, 330022	330040, 330042, 330059	330093, 330130	330743	
	III Wagon (H50)	08/89-08/95	2RZ-E	88	330015, 330022	330040, 330042, 330059	330093, 330130	330743	
2.4 4WD	IV Box	08/95-04/98	2RZ-E	85	330022	330059	330130	330743	

OPS Oil Pressure Switches **BLS** Brake Light Switches **TT-RF** Temperature Transmitter and Radiator Fan Switches **RLS** Reverse Light Switches **VAR** Various

ERA S.p.A. Moncalieri (TO) Italy - tel: +39 011 6891511 - fax: +39 011 6472862 - www.eranet.it

Vehicle		Date	Engine	kW	OPS	BLS	TT-RF	RLS	VAR
2.4 4WD	IV Wagon	08/95-04/98	2RZ-E	85	330022	330059	330130	330743	
	III Box (H50)	08/89-08/95	2RZ-E	88	330015, 330022	330040, 330042, 330059	330093, 330130	330743	
	III Wagon (H50)	08/89-08/95	2RZ-E	88	330015, 330022	330040, 330042, 330059	330093, 330130	330743	
2.4 D	II Wagon (H20)	08/84-08/89	2L	55	330008	330040, 330042	330093, 330135		
	III Wagon (H50)	08/89-08/95	2L	55	330008	330040, 330042, 330059	330093, 330130	330743	
	IV Box	09/95-08/01	2L	55				330743	
	IV Wagon	07/99-	2L	55				330743	
	III Box (H50)	09/89-08/95	2L	57				330743	
	III Wagon (H50)	10/93-08/95	2L	57	330008	330040, 330042, 330059	330093, 330130	330743	
	IV Box	08/95-	2L	58	330008	330059	330130	330743	
	IV Wagon	08/95-	2L	58	330008	330059	330130	330743	
2.4 D 4WD	III Box (H50)	08/89-08/95	2L	55	330008	330040, 330042, 330059	330093, 330130	330743	
	III Wagon (H50)	08/89-08/95	2L	55	330008	330040, 330042, 330059	330093, 330130	330743	
2.4 Diesel	III Box (H50)	02/90-08/95	2L	55	330008	330040, 330042, 330059	330093, 330130	330743	
2.4 i	IV Box	08/95-	2RZ-E	88				330743	
2.4 TD	IV Box	08/95-	2L-T	66	330008	330059	330130	330743	
	IV Wagon	08/95-	2L-T	66	330008	330059	330130	330743	
2.4 TD 4WD	IV Box	08/95-	2L-T	66	330008	330059	330130	330743	
	IV Wagon	08/95-	2L-T	66	330008	330059	330130	330743	
2.5 D-4D	IV Box	11/01-	2KD-FTV	65	330022	330059, 330703	330130	330743	
	IV Wagon	11/01-	2KD-FTV	65	330022	330059, 330703	330130	330743	
	V Box	09/06-	2KD-FTV	70		330703		330743	
	V Box (H20_)	09/06-	2KD-FTV	70		330703		330743	
	V Wagon	08/06-	2KD-FTV	70		330703		330743	
	IV Box	11/01-	2KD-FTV	75	330022	330059, 330703	330130	330743	
	IV Wagon	11/01-	2KD-FTV	75	330022	330059, 330703	330130	330743	
	V Box (H20_)	09/06-	2KD-FTV	80		330703		330743	
	V Wagon (H20_)	09/06-	2KD-FTV	80		330703		330743	
	V Box	09/06-	2KD-FTV	86		330703		330743	
	V Wagon	08/06-	2KD-FTV	86		330703		330743	
2.5 D-4D 4WD	IV Box	11/01-	2KD-FTV	75		330703		330743	
2.5 D-4D 4x4	IV Box (H100)	08/01-08/06	2KD-FTV	65		330703		330743	
	IV Wagon (H100)	08/01-08/06	2KD-FTV	75		330703		330743	
	V Box	09/06-	2KD-FTV	86		330703		330743	
	V Wagon	08/06-	2KD-FTV	86		330703		330743	
2.7	IV Box	04/98-	3RZ-FE	105	330022	330059	330130	330743	
	IV Wagon	04/98-11/01	3RZ-FE	105	330022	330059	330130	330743	
	IV Wagon	11/01-	3RZ-FE	106	330022	330059	330130	330743	

OPS Oil Pressure Switches **BLS** Brake Light Switches **TT-RF** Temperature Transmitter and Radiator Fan Switches **RLS** Reverse Light Switches **VAR** Various

Vehicle		Date	Engine	kW	OPS	BLS	TT-RF	RLS	VAR
2.7 4WD	IV Box	04/98-	3RZ-FE	105	330022	330059	330130	330743	
	IV Wagon	04/98-	3RZ-FE	105	330022	330059	330130	330743	
3.0 D	IV Box (H100)	08/98-	5L	65				330743	
	IV Wagon (H100)	08/98-12/04	5L	65				330743	
HILUX		**11/82 -**							
1.8	II Pickup (_N_)	08/88-07/94	2Y	61	330009, 330022, 330567	330039, 330059	330093	330743	
2.2 4WD	II Pickup (_N_)	01/87-12/89	4Y	69	330009, 330022, 330567	330039, 330059	330093	330743	
2.4 All-wheel Drive	II Pickup (_N_)	08/00-07/05	2RZ-FE	107				330743	
2.4 D	II Pickup (_N_)	07/98-01/02	2L	55	330008	330059	330130	330743	
	II Pickup (_N_)	03/95-	2L	58				330743	
	II Pickup (_N_)	01/92-	2L	59	330008	330039, 330059	330093, 330130	330743	
	II Pickup (_N_)	08/88-	2L	61	330008	330039, 330059	330093, 330130	330743	
2.4 D 4WD	II Pickup (_N_)	01/94-	2L	58	330008	330039, 330059	330093, 330130	330743	
	II Pickup (_N_)	08/88-	2L	61	330008	330039, 330059	330093, 330130	330743	
2.4 D AWD	II Pickup (_N_)	01/84-08/88	2L	55				330743	
2.4 i 4WD	II Pickup (_N_)	06/89-	22RE	84	330009, 330022, 330567	330039, 330059	330093, 330130	330743	
	II Pickup (_N_)	06/89-	22R	84	330009, 330022, 330567	330039, 330059	330093, 330130	330743	
	II Pickup (_N_)	08/97-	2RZ-FE	103	330022	330059		330743	
2.4 TD 4WD	II Pickup (_N_)	08/98-01/02	2L-T	66	330008	330059	330130	330743	
2.4 TD 4x4	Closed Off-Road Vehicle	08/97-07/01	2L-T	66				330743	
2.5 D 4x4	III Pickup	08/05-	2KD-FTV	75		330723		330743	
2.5 D-4D	III Pickup	06/06-	2KD-FTV	75		330723		330743	
	III Pickup	12/07-	2KD-FTV	88		330723		330743	
2.5 D-4D 4x4	III Pickup	12/07-	2KD-FTV	88		330723		330743	
3.0	III Pickup	08/05-09/06	1KD-FTV	120		330723		330743	
3.0 All-wheel Drive 4x4	III Pickup	08/05-	1KD-FTV	120		330723		330743	
3.0 D	III Pickup	10/06-	1KD-FTV	126		330723		330743	
3.0 D-4D 4x4	III Pickup	12/07-	1KD-FTV	126		330723		330743	
IQ		**01/09 -**							
1.0	(_GJ1_, AJ1)	01/09-	1KR-FE	50		330723			
1.33	(_GJ1_, AJ1)	01/09-	1NR-FE	72		330723			
1.4 D-4D	(_GJ1_, AJ1)	01/09-	1ND-TV	66		330723			
LAND CRUISER		**11/80 -**							
2.4	(_J7_)	11/84-05/93	22R	77	330009, 330567	330039, 330059	330093	330743	
	(_J7_)	11/84-05/93	22R	81				330743	
	(_J7_)	12/88-12/96	22RE	84	330009, 330567	330039, 330059	330093, 330130	330743	
2.4 D	(_J7_)	11/84-10/85	2L	53	330008	330039	330093, 330135		
2.4 TD	(_J7_)	10/85-05/90	2L-T	63	330008	330039	330093, 330135	330743	

OPS Oil Pressure Switches **BLS** Brake Light Switches **TT-RF** Temperature Transmitter and Radiator Fan Switches **RLS** Reverse Light Switches **VAR** Various

ERA S.p.A. Moncalieri (TO) Italy - tel: +39 011 6891511 - fax: +39 011 6472862 - www.eranet.it

Vehicle		Date	Engine	kW	OPS	BLS	TT-RF	RLS	VAR
2.4 TD	(_J7_)	01/90-05/93	2L-T	66		330039, 330059	330093, 330130	330743	
	Hardtop (_J7_)	07/90-05/96	2L-T	66		330039, 330059	330093, 330130	330743	
3.0 D-4D	(J12_)	01/03-	1KD-FTV	120	330022	330723	330130	330743	
	(J12_)	08/04-	1KD-FTV	122	330022	330723	330130	330743	
	(J12_)	01/07-	1KD-FTV	127		330723		330743	
3.0 TD	(_J7_)	05/93-05/96	1KZ-T	92		330059	330130	330743	
	Hardtop (_J7_)	05/93-05/96	1KZ-T	92		330059	330130	330743	
3.4 D	(_J7_)	11/84-12/96	3B	70		330039, 330059	330093, 330135		
3.4 TD	(_J7_)	10/85-08/86	13BT	91	330008	330039	330093, 330135		
3.5 D 4x4	(_J7_)	01/90-08/92	1PZ	85	330008	330039, 330059	330093, 330130	330743	
4.0	(_J6_)	08/87-12/89	3F-E	115		330040, 330042	330093, 330130		
	(J12_)	09/02-08/04	1GR-FE	179		330723			
	(J12_)	01/03-	1GR-FE	183	330022	330723			
4.0 Turbo-D	(_J6_)	10/85-12/89	12HT	100		330040, 330042	330093, 330135		
4.2 TD	(_J7_)	01/90-	1H-Z	96	330008	330039, 330059	330093, 330130		
4.5 D V8	(_URJ20_, J20_)	01/08-	1VD-FTV	210		330738			
4.5 D-40 V8	(_URJ20_, J20_)	01/08-	1VD-FTV	195		330738			
4.7 V8	(_URJ20_, J20_)	01/10-	2UZ-FE	175		330738			
	(_URJ20_, J20_)	11/07-	2UZ-FE	202		330738			
	(_URJ20_, J20_)	01/08-	2UZ-FE	212		330738			
LAND CRUISER 100			**01/98 -**						
4.2 TD	(_J10_)	01/98-	1HD-FTE	150		330703	330130		
4.7	(_J10_)	01/98-	2UZ-FE	173		330703	330130		
	(_J10_)	02/02-	2UZ-FE	175		330703	330130		
LAND CRUISER 150			**04/02 -**						
3.0 D-4D	(J15_)	03/10-	1KD-FTV	127		330723		330743	
4.0 V6 Dual VVTi	(J15_)	01/10-	1GR-FE	205		330738			
4.0 V6 VVTi	(J15_)	01/10-	1GR-FE	183		330738			
LAND CRUISER 80			**01/90 - 02/98**						
4.0	(_J8_)	01/90-08/92	3F-E	115		330039, 330059	330093		
4.2 D	(_J8_)	01/90-12/97	1H-Z	99	330008	330039, 330059	330093, 330130		
4.2 TD	(_J8_)	10/92-12/97	1HD-T	118		330039, 330059, 330703	330093, 330130		
	(_J8_)	01/90-12/97	1HD-T	123		330039, 330059, 330703	330093, 330130		
4.5 24V	(_J8_)	08/92-12/97	1FZ-FE	151		330059, 330703	330130		
LAND CRUISER 90			**04/95 -**						
3.0 D-4D	(_J9_)	10/00-	1KD-FTV	120	330022	330059, 330703	330130	330743	
3.0 TD	(_J9_)	04/96-	1KZ-TE	92	330022	330059, 330703	330130	330743	
	(_J9_)	04/95-07/00	1KZ-TE	103		330703		330743	

OPS Oil Pressure Switches **BLS** Brake Light Switches **TT-RF** Temperature Transmitter and Radiator Fan Switches **RLS** Reverse Light Switches **VAR** Various

Vehicle		Date	Engine	kW	OPS	BLS	TT-RF	RLS	VAR
3.4 i 24V	(_J9_)	04/96-	5VZ-FE	131	330022	330059, 330703	330100, 330130	330743	
LITEACE			**01/83 - 01/98**						
1.5	Box (CM3_V, KM3_V)	05/86-09/91	5K	51	330015	330040, 330042	330093	330743	
	Bus (CM30_G, KM30_G)	10/85-08/89	5K	51	330015	330040, 330042	330093	330743	
	Box (_R2__V)	01/92-01/95	5K	52	330015, 330022		330093	330743	
	Bus (CM30_G, KM30_G)	07/89-01/92	5K	52	330015	330040, 330042	330093	330743	
	Bus (_R2_LG)	01/92-01/95	5K	52	330015, 330022		330093	330743	
1.8 D	Box (CM3_V, KM3_V)	10/85-08/88	1C	46	330008	330040, 330042	330093		
2.0 D	Box (_R2__V)	01/92-05/94	2C	51	330008		330093, 330130	330743	
	Box (CM3_V, KM3_V)	08/88-01/92	2C	53	330008	330040, 330042	330093, 330130	330743	
	Bus (CM30_G, KM30_G)	08/88-01/92	2C	53	330008	330040, 330042	330093, 330130	330743	
	Bus (_R2_LG)	01/92-05/94	2C	53	330008		330093, 330130	330743	
2.2	Box (_R2__V)	01/92-01/95	4Y-EC	72	330009, 330022, 330567		330093, 330130	330743	
	Bus (_R2_LG)	01/92-01/95	4Y-EC	72	330009, 330022, 330567		330093, 330130	330743	
MODELL F			**11/82 - 10/90**						
2.0	Bus (_R2_, 31)	08/88-01/90	3Y	66	330009, 330567	330040, 330042	330093	330743	
2.2	Bus (_R2_, 31)	08/87-01/90	4Y-EC	72	330009, 330567	330040, 330042	330093	330743	
MR 2			**12/89 -**						
1.8 16V VT-i	III (_W3_)	04/00-	1ZZ-FE	103	330022	330059, 330703	330130	330743, 330752	
2.0	II (_W2_)	12/89-08/92	3S-FE	88	330015, 330022	330059, 330081, 330703	330100, 330130	330743	
2.0 16V	II (_W2_)	12/89-05/00	3S-GE	115	330015, 330022	330059, 330081, 330703	330093, 330130	330743	
	II (_W2_)	12/89-05/00	3S-GE	125	330015, 330022	330059, 330081, 330703	330093, 330130	330743	
	II (_W2_)	12/89-05/00	3S-GE	129	330015, 330022	330059, 330081, 330703	330093, 330130	330743	
PASEO			**08/95 - 12/99**						
1.5 16V	Convertible (EL54)	10/96-03/99	5E-FE	66	330022	330059	330100, 330130	330743	
	Coupe (EL54)	08/95-07/99	5E-FE	66	330022	330059	330100, 330130	330743	
PICNIC			**05/96 - 08/06**						
2.0	(_XM10)	01/01-12/01	3S-FE	90				330743	
2.0 16V	(_XM10)	05/96-12/01	3S-FE	94	330022	330059	330130	330743	
2.0 VVTi	(_M20_)	05/01-08/06	1AZ-FE	110		330723		330743	
2.2 D	(_XM10)	08/97-12/01	3C-TE	66	330022	330059	330130	330743	
2.4 VVTi	(_M20_)	11/03-08/06	2AZ-FE	115		330723			
PREVIA			**05/90 -**						
2.0 D-4D	(CLR3_, ACR3_)	03/01-	1CD-FTV	85	330022	330059, 330703, 330723	330130	330743	
2.4	(TCR2_, TCR1_)	05/90-08/00	2TZ-FE	97	330015, 330022	330039	330093, 330130		

OPS Oil Pressure Switches **BLS** Brake Light Switches **TT-RF** Temperature Transmitter and Radiator Fan Switches **RLS** Reverse Light Switches **VAR** Various

ERA S.p.A. Moncalieri (TO) Italy - tel: +39 011 6891511 - fax: +39 011 6472862 - www.eranet.it

Vehicle		Date	Engine	kW	OPS	BLS	TT-RF	RLS	VAR
2.4	(CLR3_, ACR3_)	10/05-	2AZ-FE	125		330723, 330738			
	III (GSR3_, GSR5_)	10/05-	2AZ-FE	125		330723, 330738			
2.4 4WD	(TCR2_, TCR1_)	05/90-08/00	2TZ-FE	97	330015, 330022	330039	330093, 330130		
2.4 4x4	(CLR3_, ACR3_)	10/05-	2AZ-FE	125		330723, 330738			
2.4 16V	(CLR3_, ACR3_)	08/00-	2AZ-FE	115	330022	330059, 330703, 330723, 330738	330130	330743	
2.4 GX	(TCR2_, TCR1_)	01/94-07/97	2TZ-FZE	110				330743	
3.5	(CLR3_, ACR3_)	11/06-	2GR-FE	206		330723, 330738			
	III (GSR3_, GSR5_)	11/06-	2GR-FE	206		330723, 330738			
3.5 4x4	(CLR3_, ACR3_)	11/06-	2GR-FE	206		330723, 330738			
PRIUS			**05/00 -**						
1.5	Saloon (NHW11_)	05/00-01/04	1NZ-FXE	53	330022	330059, 330703	330130		
	Hatchback	08/03-	1NZ-FXE	57	330022	330059, 330703			
1.8 Hybrid	(ZVW30_)	01/09-	2ZR-FXE	73		330738			
RAV 4			**01/94 -**						
1.8 VVTi	II (XA2)	02/01-	1ZZ-FE	92	330022	330059	330130	330743	
2.0	I (SXA1_)	06/97-09/99	3S-FE	99				330743	
	III (ZSA_, ACA_, ACE_, ALA_, GSA3_)	12/08-	3ZR-FAE	116		330738		330743	
2.0 4x4	I (SXA1_)	01/94-09/99	3S-FE	99				330743	
2.0 FWD	III (ZSA_, ACA_, ACE_, ALA_, GSA3_)	12/08-	3ZR-FAE	116		330738		330743	
2.0 16V	I Cabrio (SXA1_)	12/97-06/00	3S-FE	94	330022	330059	330130	330743	
	I (SXA1_)	06/94-06/00	3S-FE	95	330022	330059	330130	330743	
2.0 D-4D 4WD	II (XA2)	09/01-	1CD-FTV	85	330022	330703	330130	330743	
2.0 VVT-i 4WD	III (ZSA_, ACA_, ACE_, ALA_, GSA3_)	03/06-	1AZ-FE	112	330022	330723, 330738		330743	
2.0 VVTi 4WD	II (XA2)	06/00-	1AZ-FE	110	330022	330059, 330703	330130	330743	
2.2 D-4D	III (ZSA_, ACA_, ACE_, ALA_, GSA3_)	03/06-	2AD-FTV	100	330022	330723, 330738		330743	
	III (ZSA_, ACA_, ACE_, ALA_, GSA3_)	12/08-	2AD-FHV	110		330723, 330738		330743	
2.2 D-CAT	III (ZSA_, ACA_, ACE_, ALA_, GSA3_)	03/06-	2AD-FHV	130	330022	330723, 330738		330743	
2.4 VVTi	II (XA2)	08/03-01/06	2AZ-FE	120		330703		330743	
	III (ZSA_, ACA_, ACE_, ALA_, GSA3_)	11/05-	2AZ-FE	125		330723, 330738		330743	
2.4 VVTi 4x4	II (XA2)	08/03-10/05	2AZ-FE	112	330022	330059, 330703	330130	330743	
3.5 VVTi	III (ZSA_, ACA_, ACE_, ALA_, GSA3_)	11/05-	2GR-FE	201		330723, 330738			
STARLET			**12/89 - 10/99**						
1.0	(_P8_)	12/89-12/92	1E	40	330015	330039, 330059	330100	330743	
1.3	(EP91)	04/96-03/99	4E-FE	55	330022	330059	330100, 330130	330743	
1.3 12V	(_P8_)	12/89-03/96	2E-E	55	330015, 330022	330039, 330059	330100, 330130	330743	
	(_P8_)	12/89-12/92	2E	55	330015	330039, 330059	330100, 330130	330743	
1.3 XL	(_P8_)	12/89-12/91	2E	52	330015	330039, 330059	330100, 330130	330743	
1.5 D	(_P8_)	12/89-03/96	1N	40	330009, 330567	330039, 330059	330100, 330130	330743	

OPS Oil Pressure Switches **BLS** Brake Light Switches **TT-RF** Temperature Transmitter and Radiator Fan Switches **RLS** Reverse Light Switches **VAR** Various

Vehicle		Date	Engine	kW	OPS	BLS	TT-RF	RLS	VAR
SUPRA			**01/86 - 08/98**						
3.0 24V	(MA70)	01/86-08/88	7M-GE	150			330135		
3.0 i	(JZA70, JZA80)	05/93-08/98	2JZ-GE	168		330703			
3.0 i Bi-Turbo	(JZA70, JZA80)	05/93-08/98	2JZ-GTE	243	330022	330703	330130		
3.0 Turbo	(MA70)	09/87-04/93	7M-GTE	173			330093, 330130, 330135		
	(MA70)	08/88-05/93	7M-GTE	175			330093, 330130		
TERCEL			**03/79 - 01/88**						
1.45	(_L1_, _L2_)	08/83-05/85	3A-C	52	330015	330039	330093		
1.5 4WD	(AL2_)	05/86-01/88	3A-C	50	330015	330039	330093		
URBAN CRUISER			**10/06 -**						
1.33	(NCP11_)	04/09-	1NR-FE	74		330723		330743	
1.4 D-4D	(NCP11_)	04/09-	1ND-TV	66		330723		330743	
1.4 D-4D 4x4	(NCP11_)	04/09-	1ND-TV	66		330723		330743	
VERSO			**04/09 -**						
1.6	(_ZGR2_)	04/09-	1ZR-FAE	97		330738		330743	
1.8	(_ZGR2_)	04/09-	2ZR-FAE	108		330738		330743	
2.0 D-4D	(_ZGR2_)	04/09-	1AD-FTV	93		330738		330743	
2.2 D-4D	(_ZGR2_)	04/09-	2AD-FHV	110		330738		330743	
2.2 D-CAT	(_ZGR2_)	04/09-	2AD-FHV	130		330738		330743	
YARIS			**04/99 -**						
1.0 16V	(_P1_)	03/03-	1SZ-FE	48	330022	330059, 330703			
	(_P1_)	04/99-	1SZ-FE	50	330022	330059, 330703			
1.0 VVT-i	(_P9_)	01/06-	1KR-FE	51	330022	330723, 330738		330752	
1.3	(_P1_)	04/02-	2SZ-FE	64	330022	330059, 330703		330743	
1.3 16V	(_P1_)	11/99-	2NZ-FE	63	330022	330059		330743	
1.3 VVT-i	(_P9_)	01/06-	2SZ-FE	64	330022	330723		330752	
1.33 VVT-i	(_P9_)	03/09-	1NR-FE	74		330738		330743	
1.4 D-4D	(_P1_)	12/01-	1ND-TV	55	330022	330059, 330703	330130	330743	
	(_P9_)	01/06-	1ND-TV	66	330022	330723, 330738		330743, 330749, 330752	
1.5	(_P9_)	11/05-	1NZ-FE	80				330743	
1.5 TS	(_P1_)	01/03-	1NZ-FE	77	330022	330059		330743	
1.5 VVT-i TS	(_P1_)	04/01-	1NZ-FE	78	330022	330059		330743	
1.8 VVTi	(_P9_)	01/07-	2ZR-FE	98		330723, 330738		330743, 330749	
YARIS VERSO			**11/99 -**						
1.3	(NC/LP2_)	11/99-	2NZ-FE	62	330022	330059, 330703		330743	
	(NC/LP2_)	11/99-	2NZ-FE	63	330022	330059, 330703		330743	
1.4 D-4D	(NC/LP2_)	12/01-	1ND-TV	55	330022	330059, 330703	330130	330743	
1.5	(NC/LP2_)	05/03-	1NZ-FE	77	330022	330059		330743	

OPS Oil Pressure Switches **BLS** Brake Light Switches **TT-RF** Temperature Transmitter and Radiator Fan Switches **RLS** Reverse Light Switches **VAR** Various

ERA S.p.A. Moncalieri (TO) Italy - tel: +39 011 6891511 - fax: +39 011 6472862 - www.eranet.it

Vehicle		Date	Engine	kW	OPS	BLS	TT-RF	RLS	VAR
1.5	(NC/LP2_)	03/00-	1NZ-FE	78	330022	330059		330743	

VAUXHALL

AGILA 02/00 -

1.0 12V	Mk I (A)	09/00-08/05	Z 10 XE	43		330741		330745	
	Mk I (A)	02/00-11/06	Z 10 XEP	44		330741		330745	
	Mk II (B)	01/08-	K10B	48				330745	
1.2 16V	Mk I (A)	09/00-	Z 12 XE	55		330741		330745	
1.2 16V Twinport	Mk I (A)	07/04-11/06	Z 12 XEP	59		330741		330745	
1.2 i 16V	Mk II (B)	01/08-	K12B	63				330745	
1.3 CDTI	Mk II (B)	01/08-	Z 13 DTJ	55		330720, 330723		330745	

ASTRA 09/84 -

1.2	Mk II Estate	09/84-12/88	12 S	44	330363				
	Mk II Hatchback	09/84-08/91	12 S	44	330363				
1.3	Mk II Belmont	09/85-08/91	13 S	55	330363				
	Mk II Estate	09/84-08/91	13 S	55	330363				
	Mk II Hatchback	09/84-08/91	13 S	55	330363				
1.3 CDTi	Mk V (H) Estate	08/04-03/09	Z 13 DTH	66		330720, 330721			
1.3 CDTI	Mk V (H) Hatchback	01/04-05/09	Z 13 DTH	66		330720, 330721			
1.3 CDTi	Mk V (H) Sport Hatch	04/05-	Z 13 DTH	66		330720, 330721			
1.4	Mk V (H) Estate	08/04-03/09	Z 14 XEP	66		330720, 330721			
	Mk V (H) Hatchback	01/04-05/09	Z 14 XEP	66		330720, 330721			
1.4 16V	Mk IV (G)	09/98-	X 14 XE, Z 14 XE	66	330363	330720			
	Mk IV (G) Estate	02/98-	X 14 XE, Z 14 XE	66	330363	330720			
	Mk IV (G) Hatchback	02/98-	X 14 XE, Z 14 XE	66	330363	330720			
1.4 i	Mk II Belmont	01/90-12/91	C 14 NZ	44	330363				
	Mk II Hatchback	01/90-08/91	C 14 NZ	44	330363				
	Mk III (F)	04/92-09/98	C 14 NZ	44	330363				
	Mk III (F) Estate	09/91-02/98	C 14 NZ	44	330363				
	Mk III (F) Hatchback	09/91-02/98	C 14 NZ	44	330363				
	Mk III (F)	04/92-09/98	C 14 SE	60	330363				
	Mk III (F) Convertible	05/93-03/01	C 14 SE	60	330363				
	Mk III (F) Estate	03/91-02/98	C 14 SE	60	330363				
	Mk III (F) Hatchback	03/92-02/98	C 14 SE	60	330363				
1.4 i 16V	Mk III (F)	02/96-09/98	X 14 XE	66	330363				
	Mk III (F) Convertible	01/96-03/01	X 14 XE	66	330363				
	Mk III (F) Estate	02/96-01/98	X 14 XE	66	330363				
	Mk III (F) Hatchback	02/96-02/98	X 14 XE	66	330363				
	Mk V (H) Sport Hatch	03/05-	Z 14 XEP	66		330720, 330721			
1.4 S	Mk II Estate	01/89-08/91	14 NV	55	330363				
	Mk II Hatchback	01/90-08/91	14 NV	55	330363				

OPS Oil Pressure Switches **BLS** Brake Light Switches **TT-RF** Temperature Transmitter and Radiator Fan Switches **RLS** Reverse Light Switches **VAR** Various

Vehicle		Date	Engine	kW	OPS	BLS	TT-RF	RLS	VAR
1.4 S	Mk III (F) Estate	09/91-02/98	14 NV	55	330363				
	Mk III (F) Hatchback	09/91-02/98	14 NV	55	330363				
1.6	Mk IV (G)	09/98-09/00	X 16 SZR	55	330363				
	Mk IV (G) Estate	03/98-04/04	X 16 SZR	55	330363				
	Mk IV (G) Hatchback	02/98-09/00	X 16 SZR	55	330363				
	Mk II Estate	09/84-08/91	16 SV	60	330363				
	Mk II Hatchback	09/84-08/91	16 SV	60	330363				
	Mk IV (G)	09/00-	Z 16 SE	62	330363	330720			
	Mk IV (G) Estate	03/98-04/04	Z 16 SE	62	330363	330720			
	Mk IV (G) Hatchback	09/00-	Z 16 SE	62	330363	330720			
	Mk V (H) Estate	08/04-03/09	Z 16 XEP	77		330720, 330721			
	Mk V (H) Hatchback	01/04-05/09	Z 16 XEP	77		330720, 330721			
	Mk V (H) Sport Hatch	02/05-	Z 16 XEP	77		330720, 330721			
	Mk V (H) Estate	08/04-03/09	Z 16 XER	85		330720, 330721			
	Mk V (H) Hatchback	01/04-05/09	Z 16 XER	85		330720, 330721			
	Mk V (H) Estate	08/04-03/09	Z 16 LET	132		330720, 330721			
	Mk V (H) Sport Hatch	10/06-	Z 16 LET	132		330720, 330721			
1.6 16V	Mk IV (G)	09/98-	C 16 SEL, Z 16 XEP	74	330363	330720			
	Mk IV (G) Convertible	03/01-	Z 16 XE	74	330363	330720			
	Mk IV (G) Estate	03/98-04/04	X 16 XEL, Z 16 XE	74	330363	330720			
	Mk IV (G) Hatchback	02/98-	X 16 XEL, Z 16 XE	74	330363	330720			
1.6 D	Mk II Belmont	09/85-08/91	16 DA	40	330363				
	Mk II Estate	09/84-12/89	16 DA	40	330363				
	Mk II Hatchback	09/84-12/89	16 DA	40	330363				
1.6 i	Mk III (F)	08/94-07/96	X 16 SZ	52	330363				
	Mk III (F) Convertible	03/93-08/96	X 16 SZ	52	330363				
	Mk III (F) Estate	07/94-02/98	X 16 SZ	52	330363				
	Mk III (F) Hatchback	07/94-02/98	X 16 SZ	52	330363				
	Mk II Convertible	01/91-08/93	E 16 NZ	55	330363				
	Mk III (F)	03/92-09/98	C 16 NZ, X 16 SZR	55	330363				
	Mk III (F) Convertible	01/96-03/01	X 16 SZR	55	330363				
	Mk III (F) Estate	09/91-02/98	C 16 NZ, E 16 NZ	55	330363				
	Mk III (F) Hatchback	09/91-02/98	C 16 NZ, E 16 NZ	55	330363				
	Mk II Convertible	01/87-12/91	16 SV	60	330363				
	Mk III (F)	05/92-12/94	C 16 SE	74	330363				
	Mk III (F) Hatchback	03/92-02/98	C 16 SE	74	330363				
1.6 i 16V	Mk III (F)	08/94-09/98	X 16 XEL	74	330363				
	Mk III (F) Estate	01/94-02/98	X 16 XEL	74	330363				
	Mk III (F) Hatchback	01/94-02/98	X 16 XEL	74	330363				
	Mk V (H) Sport Hatch	12/06-	Z 16 XER	85		330720, 330721			
1.6 i CAT	Mk II Convertible	10/87-02/93	C 16 LZ, C 16 NZ	55	330363				

OPS Oil Pressure Switches **BLS** Brake Light Switches **TT-RF** Temperature Transmitter and Radiator Fan Switches **RLS** Reverse Light Switches **VAR** Various

ERA S.p.A. Moncalieri (TO) Italy - tel: +39 011 6891511 - fax: +39 011 6472862 - www.eranet.it

Vehicle		Date	Engine	kW	OPS	BLS	TT-RF	RLS	VAR
1.6 S	Mk II Belmont	01/89-12/91	16 SV	60	330363				
1.6 Si	Mk III (F) Estate	03/91-12/94	C 16 SE	74	330363				
1.7 CDTI	Mk V (H) Hatchback	01/04-05/09	Z 17 DTL	59		330720, 330721			
1.7 CDTi	Mk V (H) Estate	08/04-03/09	Z 17 DTH	74		330720, 330721			
1.7 CDTI	Mk V (H) Hatchback	01/04-05/09	Z 17 DTH	74		330720, 330721			
1.7 CDTi	Mk V (H) Sport Hatch	02/05-	Z 17 DTH	74		330720, 330721			
	Mk V (H) Estate	08/04-03/09	Z 17 DTJ	81		330720, 330721			
	Mk V (H) Hatchback	01/04-05/09	Z 17 DTJ	81		330720, 330721			
	Mk V (H) Sport Hatch	02/07-	A 17 DTJ	81		330720, 330721			
1.7 CDTI 16V	Mk IV (G)	04/03-	Z 17 DTL	59		330720			
	Mk IV (G) Estate	04/03-	Z 17 DTL	59		330720			
	Mk IV (G) Hatchback	04/03-	Z 17 DTL	59		330720			
1.7 D	Mk II Belmont	01/89-12/91	17 D	42	330363				
	Mk II Estate	02/89-08/91	17 D	42	330363				
	Mk II Hatchback	01/89-08/91	17 DR	42	330363				
1.7 DTI 16V	Mk IV (G)	02/00-	Y 17 DT	55		330720			
	Mk IV (G) Estate	02/00-	Y 17 DT	55		330720			
	Mk IV (G) Hatchback	02/00-	Y 17 DT	55		330720			
1.7 TD	Mk III (F)	08/94-09/98	X 17 DTL	50	330363				
	Mk III (F) Estate	01/94-02/98	X 17 DTL	50	330363				
	Mk III (F) Hatchback	08/94-02/98	X 17 DTL	50	330363				
	Mk IV (G)	09/98-08/00	X 17 DTL	50	330363	330720			
	Mk IV (G) Estate	02/98-08/00	X 17 DTL	50	330363	330720			
	Mk IV (G) Hatchback	02/98-08/00	X 17 DTL	50	330363	330720			
1.8	Mk II Belmont	01/86-12/90	18 SE	82	330363				
	Mk V (H) Estate	01/04-03/09	Z 18 XE	92	330363	330720, 330721			
	Mk V (H) Hatchback	01/04-05/09	Z 18 XE	92	330363	330720, 330721			
	Mk V (H) Sport Hatch	02/05-	Z 18 XE	92	330363	330720, 330721			
	Mk V (H) Estate	01/04-03/09	A 18 XER	103		330720, 330721			
	Mk V (H) Hatchback	01/04-05/09	A 18 XER	103		330720, 330721			
1.8 16V	Mk III (F) Convertible	11/94-03/01	C 18 XEL, X 18 XE	85	330363		330120, 330651		
	Mk IV (G)	02/98-07/04	X 18 XE1	85	330363	330720			
	Mk IV (G) Coupe	03/00-08/05	Z 18 XEL	85	330363	330720			
	Mk IV (G) Estate	02/98-08/00	X 18 XE1	85	330363	330720			
	Mk IV (G) Hatchback	02/98-09/00	X 18 XE1	85	330363	330720			
	Mk IV (G)	02/98-07/04	Z 18 XE	92	330363	330720			
	Mk IV (G) Convertible	03/01-	Z 18 XE	92	330363	330720			
	Mk IV (G) Coupe	09/00-	Z 18 XE	92	330363	330720			
	Mk IV (G) Estate	09/00-	Z 18 XE	92	330363	330720			
	Mk IV (G) Hatchback	09/00-	Z 18 XE	92	330363	330720			
1.8 GTE	Mk II Hatchback	09/84-08/91	18 E, 18 SE	82	330363				

OPS Oil Pressure Switches **BLS** Brake Light Switches **TT-RF** Temperature Transmitter and Radiator Fan Switches **RLS** Reverse Light Switches **VAR** Various

Vehicle		Date	Engine	kW	OPS	BLS	TT-RF	RLS	VAR
1.8 i	Mk III (F)	03/92-09/98	C 18 NZ	66	330363				
	Mk III (F) Estate	09/91-02/98	C 18 NZ	66	330363				
	Mk II Estate	01/90-08/91	18 E	83	330363				
	Mk II Belmont	09/85-08/91	18 E, 18 SE	85	330363				
1.8 i 16V	Mk III (F)	01/94-12/96	C 18 XEL	85	330363				
	Mk III (F) Estate	09/94-02/98	C 18 XEL	85	330363				
	Mk III (F)	06/93-10/94	C 18 XE	92	330363		330651		
	Mk III (F) Estate	09/94-02/98	C 18 XE	92	330363		330651		
	Mk III (F) Hatchback	09/94-02/98	C 18 XE	92			330651		
	Mk V (H) Sport Hatch	03/07-	A 18 XER	103		330720, 330721			
1.9 CDTi	Mk V (H) Estate	08/04-03/09	Z 19 DTL	74		330720, 330721			
	Mk V (H) Sport Hatch	08/05-	Z 19 DTL	74		330720, 330721			
	Mk V (H) Estate	08/04-03/09	Z 19 DT	88		330720, 330721			
	Mk V (H) Estate	08/04-03/09	Z 19 DT	88		330720, 330721			
1.9 CDTI	Mk V (H) Hatchback	01/04-05/09	Z 19 DTJ	88		330720, 330721			
	Mk V (H) Hatchback	01/04-05/09	Z 19 DT	88		330720, 330721			
1.9 CDTi	Mk V (H) Sport Hatch	02/05-	Z 19 DT	88		330720, 330721			
	Mk V (H) Estate	08/04-03/09	Z 19 DTH	110		330720, 330721			
1.9 CDTI	Mk V (H) Hatchback	01/04-05/09	Z 19 DTH	110		330720, 330721			
1.9 CDTi	Mk V (H) Sport Hatch	02/05-	Z 19 DTH	110		330720, 330721			
2.0 16V	Mk IV (G)	09/98-	X 20 XEV	100	330363				
	Mk IV (G) Estate	02/98-	X 20 XEV	100	330363				
	Mk IV (G) Hatchback	02/98-	X 20 XEV	100	330363				
2.0 16V Turbo	Mk IV (G) Coupe	09/00-	Z 20 LET	140	330363	330720			
2.0 DI	Mk IV (G)	02/98-07/04	X 20 DTL, Y 20 DTL	60		330720			
	Mk IV (G) Estate	03/98-04/04	X 20 DTL, Y 20 DTL	60		330720			
	Mk IV (G) Hatchback	02/98-	X 20 DTL, Y 20 DTL	60		330720			
2.0 DTI 16V	Mk IV (G)	02/98-07/04	X 20 DTH, Y 20 DTH	74		330720			
	Mk IV (G) Estate	03/98-04/04	X 20 DTH, Y 20 DTH	74		330720			
	Mk IV (G) Hatchback	08/99-	X 20 DTH, Y 20 DTH	74		330720			
2.0 GTE	Mk II Hatchback	09/86-08/91	20 SEH	95	330363				
2.0 i	Mk II Convertible	01/87-12/91	20 NE	85	330363				
	Mk III (F)	03/92-09/98	C 20 NE	85	330363				
	Mk III (F) Convertible	03/93-10/94	C 20 NE	85	330363				
	Mk III (F) Estate	09/91-02/98	C 20 NE	85	330363				
	Mk III (F) Hatchback	09/91-02/98	C 20 NE	85	330363				
2.0 i 16V	Mk III (F)	02/95-09/98	X 20 XEV	100	330363				
	Mk III (F) Estate	01/94-02/98	X 20 XEV	100	330363		330120		
	Mk III (F) Hatchback	01/94-02/98	X 20 XEV	100	330363		330120		
	Mk III (F) Hatchback	09/91-02/98	C 20 XE	110	330363				

OPS Oil Pressure Switches **BLS** Brake Light Switches **TT-RF** Temperature Transmitter and Radiator Fan Switches **RLS** Reverse Light Switches **VAR** Various

ERA S.p.A. Moncalieri (TO) Italy - tel: +39 011 6891511 - fax: +39 011 6472862 - www.eranet.it

Vehicle		Date	Engine	kW	OPS	BLS	TT-RF	RLS	VAR
2.0 i CAT	Mk II Convertible	01/91-08/93	C 20 NE	85	330363				
2.0 SRI Turbo	Mk IV (G) Hatchback	07/02-	Z 20 LET	141	330363	330720			
2.0 Turbo	Mk V (H) Estate	08/04-	Z 20 LEL	125		330720, 330721			
	Mk V (H) Hatchback	01/04-05/09	Z 20 LEL	125		330720, 330721			
	Mk V (H) Sport Hatch	02/05-	Z 20 LEL	125		330720, 330721			
	Mk IV (G) Convertible	03/02-	Z 20 LET	141	330363	330720			
	Mk V (H) Estate	08/04-	Z 20 LER	147		330720, 330721			
	Mk V (H) Hatchback	01/04-05/09	Z 20 LER	147		330720, 330721			
	Mk V (H) Hatchback	01/04-05/09	Z 20 LEH	177		330720, 330721			
2.2 16V	Mk IV (G)	03/01-	Z 22 SE	108		330720			
	Mk IV (G) Convertible	03/01-	Z 22 SE	108		330720			
	Mk IV (G) Coupe	03/00-	Z 22 SE	108		330720			
	Mk IV (G) Estate	03/01-	Z 22 SE	108		330720			
	Mk IV (G) Hatchback	03/01-	Z 22 SE	108		330720			
ASTRA TwinTop		**01/06 -**							
1.6	Mk V (H)	09/05-	Z 16 XEP	77		330720, 330721			
	Mk V (H)	10/06-	Z 16 LET	132		330720, 330721			
1.6 i 16V	Mk V (H)	10/06-	Z 16 XER	85		330720, 330721			
1.9 CDTi	Mk V (H)	01/06-	Z 19 DTH	110		330720, 330721			
2.0	Mk V (H)	02/06-09/06	Z 20 LEL	125		330720, 330721			
2.0 Turbo	Mk V (H)	01/06-	Z 20 LER	147		330720, 330721			
ASTRAVAN		**01/91 -**							
1.3 CDTi	Mk V (H)	08/05-	Z 13 DTH	66		330720, 330721			
1.4 i	Mk III (F)	01/91-10/94	C 14 NZ	44	330363				
	Mk V (H)	03/05-	Z 14 XEP	66		330720, 330721			
1.6	Mk V (H)	03/05-	Z 16 XEP	76		330720, 330721			
1.6 i	Mk III (F)	02/94-10/96	X 16 SZ	52	330363				
	Mk III (F)	01/91-08/98	C 16 NZ	55	330363				
	Mk IV (G)	08/98-09/00	X 16 SZR	55	330363				
	Mk IV (G)	09/00-	Z 16 SE	62		330720			
1.7 CDTI	Mk IV (G)	04/04-	Z 17 DTL	59		330720, 330721			
1.7 CDTi	Mk V (H)	03/05-07/06	Z 17 DTL	59		330720, 330721			
1.7 CDTI	Mk V (H)	03/05-	Z 17 DTH	74		330720, 330721			
1.7 DTI	Mk IV (G)	04/01-	Y 17 DT	55		330720			
1.7 TD	Mk III (F)	01/94-08/98	X 17 DTL	50	330363				
	Mk IV (G)	08/98-	X 17 DTL	50	330363	330720			
1.9 CDTi	Mk V (H)	03/05-	Z 19 DT	88		330720, 330721			
	Mk V (H)	03/05-	Z 19 DTH	110		330720, 330721			
2.0 DI	Mk IV (G)	08/98-	X 20 DTL	60		330720			

OPS Oil Pressure Switches **BLS** Brake Light Switches **TT-RF** Temperature Transmitter and Radiator Fan Switches **RLS** Reverse Light Switches **VAR** Various

Vehicle		Date	Engine	kW	OPS	BLS	TT-RF	RLS	VAR
CALIBRA		**06/90 - 07/97**							
2.0 i		06/90-07/97	C 20 NE	85	330363				
2.0 i 16V		06/90-07/97	X 20 XEV	100	330363		330120, 330651		
		06/90-02/94	C 20 XE	110	330363				
2.0 i 16V 4x4		02/94-07/97	X 20 XEV	100	330363		330651		
		06/90-02/94	C 20 XE	110	330363				
2.0 i 4x4		06/90-07/97	C 20 NE	85	330363				
2.0 i Turbo 4x4		03/92-07/97	C 20 LET	150	330363				
CAVALIER		**09/88 - 11/95**							
1.4 S	Mk III (87)	09/88-11/95	14 NV	55	330363				
	Mk III Hatchback	09/88-11/95	14 NV	55	330363				
1.6	Mk III (87)	09/88-05/93	16 SV	60	330363				
	Mk III Hatchback	09/88-05/93	16 SV	60	330363				
1.6 i	Mk III (87)	09/93-11/95	X 16 SZ	52	330363				
	Mk III Hatchback	09/93-11/95	X 16 SZ	52	330363				
	Mk III (87)	09/88-11/95	E 16 NZ	55	330363				
	Mk III Hatchback	09/88-11/95	E 16 NZ	55	330363				
1.7 D	Mk III (87)	09/88-09/92	17 D	42	330363				
	Mk III Hatchback	09/88-09/92	17 D	42	330363				
	Mk III (87)	07/92-11/95	17 DR	44	330363				
	Mk III Hatchback	07/92-11/95	17 DR	44	330363				
1.8	Mk III (87)	09/88-08/95	18 SV, C 18 NZ	66	330363				
	Mk III Hatchback	09/88-10/90	18 SV, C 18 NZ	66	330363				
1.8 i CAT	Mk III (87)	03/90-11/95	C 18 NZ	66	330363				
	Mk III Hatchback	03/90-11/95	C 18 NZ	66	330363				
2.0 i	Mk III (87)	09/88-10/90	20 NE	85	330363				
	Mk III Hatchback	09/88-10/92	20 NE	85	330363				
2.0 i 4x4	Mk III (87)	01/91-10/92	20 NE	85	330363				
2.0 i 16V	Mk III Hatchback	09/93-11/95	X 20 XEV	100	330363		330651		
	Mk III (87)	09/88-11/95	C 20 XE	110	330363				
	Mk III Hatchback	09/88-11/95	C 20 XE	110	330363				
2.0 i 16V 4x4	Mk III (87)	09/88-11/95	C 20 XE	110	330363				
2.0 i 4x4	Mk III (87)	09/88-09/92	20 SEH	95	330363				
	Mk III Hatchback	09/88-09/92	20 SEH	95	330363				
2.0 i CAT	Mk III (87)	09/90-11/95	C 20 NE	85	330363				
	Mk III Hatchback	09/90-11/95	C 20 NE	85	330363				
2.0 i Turbo 4x4	Mk III (87)	06/92-11/94	C 20 LET	150	330363				
2.0 SRi	Mk III (87)	09/88-09/92	20 SEH	95	330363				
	Mk III Hatchback	09/88-09/92	20 SEH	95	330363				
2.0 SRi 16V	Mk III (87)	09/93-11/95	X 20 XEV	100	330363		330651		
2.5 V6	Mk III (87)	08/88-06/94	C 25 XE	125	330363				

OPS Oil Pressure Switches **BLS** Brake Light Switches **TT-RF** Temperature Transmitter and Radiator Fan Switches **RLS** Reverse Light Switches **VAR** Various

ERA S.p.A. Moncalieri (TO) Italy - tel: +39 011 6891511 - fax: +39 011 6472862 - www.eranet.it

Vehicle		Date	Engine	kW	OPS	BLS	TT-RF	RLS	VAR
2.5 V6	Mk III Hatchback	09/88-06/94	C 25 XE	125	330363				
COMBO			**09/01 -**						
1.3 CDTI 16V	Mk II (C) (F25)	10/05-	Z 13 DTJ	55		330720			
1.4 i 16V	Mk II (C) (F25)	01/04-	Z 14 XEP	66		330720			
1.6	Mk II (C) (F25)	08/01-10/04	Z 16 SE	62		330720			
	Mk II (C) (F25)	10/01-	Z 16 SE	64		330720			
1.7 CDTI 16V	Mk II (C) (F25)	12/04-	Z 17 DTH	74		330720			
1.7 DI 16V	Mk II (C) (F25)	09/01-	Y 17 DTL	48		330720			
1.7 DTI 16V	Mk II (C) (F25)	10/01-	Y 17 DT	55		330720			
CORSA			**03/93 -**						
1.0	Mk IV (D) (L_8)	11/06-	A 10 XEP	44		330720, 330721			
1.0 12V	Mk III (C) (W5L, F08)	09/00-10/03	Z 10 XE	43		330720			
	Mk III (C) (W5L, F08)	11/03-	Z 10 XEP	44		330720			
1.0 i 12V	Mk IV (D) (L_8)	06/10-	A 10 XEP	48		330720, 330721			
1.2	Mk IV (D) (L_8)	11/06-	Z 12 XEP	59		330720, 330721			
1.2 16V	Mk III (C) (W5L, F08)	09/00-	Z 12 XE	55		330720			
1.2 i	Mk II (B)	03/93-09/00	C 12 NZ, X 12 SZ	33	330363				
1.3 CDTI	Mk IV (D) (L_8)	11/06-	A 13 DTC	55		330720, 330721			
	Mk IV (D) (L_8)	11/06-	Z 13 DTH	66		330720, 330721			
1.3 CDTI 16V	Mk III (C) (W5L, F08)	08/00-09/06	Z 13 DT	52		330720			
1.4	Mk IV (D) (L_8)	07/06-	Z 14 XEP	66		330720, 330721			
1.4 16V	Mk III (C) (W5L, F08)	09/00-	Z 14 XE	66	330363	330720			
1.4 i	Mk II (B)	03/93-09/00	C 14 NZ, X 14 SZ	44	330363				
1.4 i 16V	Convertible	01/98-	X 14 XE	66	330363				
	Mk II (B)	09/94-09/00	X 14 XE	66	330363				
	Mk IV (D) (L_8)	07/10-	A 14 XER	74		330720, 330721			
1.4 i S	Mk II (B)	03/93-09/00	C 14 SE	60	330363				
1.6 GSI 16V	Mk II (B)	03/93-09/00	C 16 XE	80	330363				
1.6 i 16V	Mk II (B)	09/94-09/00	X 16 XE	78	330363				
1.6 SRi	Mk IV (D) (L_8)	05/07-	A 16 LEL	110		330720, 330721			
1.6 VXR	Mk IV (D) (L_8)	02/07-	Z 16 LER	141		330720, 330721			
1.7 CDTI	Mk IV (D) (L_8)	11/06-	A 17 DTS	96		330720, 330721			
1.7 CDTI 16V	Mk III (C) (W5L, F08)	08/00-09/06	Z 17 DTH	74		330720			
1.7 DI 16V	Mk III (C) (W5L, F08)	08/00-09/06	Y 17 DTL	48		330720			
1.7 DTI 16V	Mk III (C) (W5L, F08)	08/00-09/06	Y 17 DT	55		330720			
1.8 16V	Mk III (C) (W5L, F08)	08/00-09/06	Z 18 XE	92	330363	330720			
CORSAVAN			**01/94 -**						
1.2	Mk IV (D)	01/10-	A 12 XEL	51		330720, 330721			
1.2 16V	Mk III (C)	09/00-	Z 12 XE	55		330720			
1.3 CDTI	Mk IV (D)	07/06-	Z 13 DTJ	55		330720, 330721			

OPS Oil Pressure Switches **BLS** Brake Light Switches **TT-RF** Temperature Transmitter and Radiator Fan Switches **RLS** Reverse Light Switches **VAR** Various

Vehicle		Date	Engine	kW	OPS	BLS	TT-RF	RLS	VAR
1.3 CDTI	Mk IV (D)	07/06-	Z 13 DTH	66		330720, 330721			
1.3 CDTI 16V	Mk III (C)	04/04-	Z 13 DT	52		330720			
1.4	Mk III (C)	11/03-11/06	Z 14 XEP	66		330720			
1.4 i	Mk II (B)	01/94-09/00	C 14 NZ	44	330363				
1.7 DI 16V	Mk III (C)	09/00-	Y 17 DTL	48		330720			
1.7 DTI 16V	Mk III (C)	09/00-	Y 17 DT	55		330720			
FRONTERA			**10/98 - 10/04**						
2.2 DTI	Mk II (B)	10/98-09/04	X 22 DTH, Y 22 DTH	85		330701			
2.2 i	Mk II (B)	10/98-	X 22 SE, Y 22 SE	100		330701			
3.2 i	Mk II (B)	10/98-10/04	6 VD1, Y 32 NE	151	330363	330701			
MERIVA			**01/03 -**						
1.3 CDTI	Mk I (A)	01/03-10/09	Z 13 DTJ	55		330720			
	Mk II (B)	06/10-	A 13 DTC	55		330721			
1.4	Mk II (B)	06/10-	A 14 XER	74		330721			
	Mk II (B)	06/10-	A 14 NEL	88		330721			
	Mk II (B)	06/10-	A 14 NET	103		330721			
1.4 16V Twinport	Mk I (A)	01/03-10/09	Z 14 XEP	66		330720			
1.6 i	Mk I (A)	01/03-10/09	Z 16 SE	64	330363	330720			
1.6 i 16V	Mk I (A)	01/03-10/09	Z 16 XE	74	330363	330720			
1.6 Turbo	Mk I (A)	05/06-	Z 16 LET	132		330720			
1.7 CDTI	Mk II (B)	06/10-	A 17 DT	74		330721			
1.7 CDTi	Mk I (A)	08/06-	Z 17 DTR	92		330720			
1.7 CDTI 16V	Mk I (A)	04/04-08/05	Z 17 DTH	74		330720			
1.8 i 16V	Mk I (A)	05/03-08/05	Z 18 XE	92	330363	330720			
MONTEREY			**09/91 - 08/99**						
3.0 DTI	Mk II	07/98-08/99	4 JX1	117		330701			
3.1 TD		09/91-07/98	4 JG2TC	84		330701			
3.2		06/92-07/98	6 VD1	130		330701			
3.5 V6 24V	Mk II	07/98-08/99	6 VE1	158		330701			
MOVANO			**10/98 -**						
1.9 DTI	Mk I (A) Combi (JD)	09/00-10/01	F9Q 770	59		330707, 330708	330692		
	Mk I (A) Van (FD)	09/00-10/01	F9Q 770	59		330707, 330708	330692		
	Mk I (A) Combi (JD)	10/01-	F9Q 774	60		330707, 330708	330692		
	Mk I (A) Van (FD)	10/01-	F9Q 774	60		330707, 330708	330692		
2.2 DTI	Mk I (A) Chassis/ Cab (ED, UD, HD)	09/00-	G9T 722	66	330698	330707, 330708	330692		
	Mk I (A) Combi (JD)	09/00-	G9T 750	66	330698	330707, 330708	330692		
	Mk I (A) Van (FD)	09/00-	G9T 722	66	330698	330707, 330708	330692		
2.3 CDTI FWD	Mk II (B) VAN (FV)	05/10-	M9T 672	74	330698	330729, 330730		330750	
	Mk II (B) VAN (FV)	05/10-	M9T 680	92	330698	330729, 330730		330750	

OPS Oil Pressure Switches **BLS** Brake Light Switches **TT-RF** Temperature Transmitter and Radiator Fan Switches **RLS** Reverse Light Switches **VAR** Various

ERA S.p.A. Moncalieri (TO) Italy - tel: +39 011 6891511 - fax: +39 011 6472862 - www.eranet.it

Vehicle		Date	Engine	kW	OPS	BLS	TT-RF	RLS	VAR
2.3 CDTI [RWD]	Mk II (B) VAN (FV)	05/10-	M9T 692	74	330698	330729, 330730		330750	
	Mk II (B) VAN (FV)	05/10-	M9T 696	92	330698	330729, 330730		330750	
	Mk II (B) VAN (FV)	05/10-	M9T 696	107	330698	330729, 330730		330750	
2.5 CDTI	Mk I (A) Chassis/ Cab (ED, UD, HD)	04/04-	G9U 754	74	330698	330707, 330708	330692		
	Mk I (A) Combi (JD)	10/01-08/09	G9U 754	74	330698	330707, 330708	330692		
	Mk I (A) Van (FD)	04/04-	G9U 754	74	330698	330707, 330708	330692		
	Mk I (A) Chassis/ Cab (ED, UD, HD)	08/06-	G9U 632	88	330698	330707, 330708	330692		
	Mk I (A) Van (FD)	08/06-	G9U 632	88	330698	330707, 330708	330692		
	Mk I (A) Chassis/ Cab (ED, UD, HD)	08/06-	G9U 632	107	330698	330707, 330708			
	Mk I (A) Combi (JD)	08/06-	G9U 632	107	330698	330707, 330708			
	Mk I (A) Van (FD)	08/06-	G9U 632	107	330698	330707, 330708			
2.5 D	Mk I (A) Chassis/ Cab (ED, UD, HD)	10/98-09/00	S8U 770	59		330707, 330708			
	Mk I (A) Combi (JD)	10/98-09/00	S8U 770	59		330707, 330708			
	Mk I (A) Van (FD)	10/98-09/00	S8U 770	59		330707, 330708			
2.5 DTI	Mk I (A) Chassis/ Cab (ED, UD, HD)	10/01-	G9U 720,G9U 724, G9U 754	84	330698	330707, 330708	330692		
	Mk I (A) Combi (JD)	10/01-08/09	G9U 720,G9U 750, G9U 754	84	330698	330707, 330708	330692		
	Mk I (A) Van (FD)	10/01-	G9U 720, 9U 724, G9U 750, G9U 754	84	330698	330707, 330708	330692		
2.8 DTI	Mk I (A) Chassis/ Cab (ED, UD, HD)	10/98-10/01	S9W 702	84		330707, 330708			
	Mk I (A) Combi (JD)	10/98-10/01	S9W 702	84		330707, 330708			
2.8 TDI	Mk I (A) Van (FD)	10/98-10/01	S9W 702	84		330707, 330708			
3.0 DTi	Mk I (A) Chassis/ Cab (ED, UD, HD)	10/03-	ZD3 202	100	330697	330707, 330708			
	Mk I (A) Combi (JD)	10/03-	ZD3 200	100	330697	330707, 330708			
	Mk I (A) Van (FD)	10/03-	ZD3 202	100	330697	330707, 330708			
NOVA			**05/83 - 03/93**						
1.0	Hatchback	05/83-03/93	10 S	33	330363				
1.2 i	Hatchback	01/85-10/89	12 NC, E 12 GV	33	330363				
1.2 i CAT	Hatchback	09/89-03/93	C 12 NZ	33	330363				
1.2 N	Hatchback	01/90-03/93	12 NV	38	330363				
1.2 S	Hatchback	05/83-02/90	12 ST	40	330363				
	Hatchback	01/88-02/90	12 S	43	330363				
1.3 i	Hatchback	09/85-10/89	13 NB	44	330363				
1.3 i CAT	Hatchback	09/89-03/93	C 13 N	44	330363				
1.3 S	Hatchback	05/83-10/89	13 SB	51	330363				
1.4 i	Hatchback	01/90-03/93	C 14 NZ	44	330363				
1.4 i S	Hatchback	09/91-03/93	C 14 SE	60	330363				
1.4 S	Hatchback	01/90-03/93	14 NV	55	330363				
1.6 GSI	Hatchback	05/88-03/92	E 16 SE	74	330363				
1.6 GSI CAT	Hatchback	02/92-03/93	C 16 SE	74	330363				

Vehicle		Date	Engine	kW	OPS	BLS	TT-RF	RLS	VAR
OMEGA			**12/93 - 03/04**						
2.0 16V	(B)	03/94-09/99	X 20 XEV	100			330120, 330651		
	(B) Estate	03/94-02/01	X 20 XEV	100			330120, 330651		
SIGNUM			**04/02 - 05/08**						
1.8		06/03-07/05	Z 18 XE	90		330720, 330721			
		08/05-	Z 18 XER	103		330720, 330721			
1.9 CDTI		04/04-03/08	Z 19 DT	88		330720, 330721			
1.9 CDTI 16V		04/04-03/08	Z 19 DTH	110		330720, 330721			
2.0 DTI		05/03-	Y 20 DTH	74		330720, 330721			
2.0 i Turbo		01/02-10/08	Z 20 NET	129		330720, 330721			
2.2 DTI		05/03-	Y 22 DTR	92		330720, 330721			
2.2 i		05/03-	Z 22 YH	114		330720, 330721			
2.8 V6 Turbo		04/02-05/08	Z 28 NEL	169		330720, 330721			
3.0 CDTi		05/03-	Y 30 DT	130		330720, 330721			
3.0 V6 CDTI		04/02-05/08	Z 30 DT	135		330720, 330721			
3.2 V6		05/03-	Z 32 SE	155		330720, 330721			
TIGRA			**06/04 -**						
1.3 CDTI	TwinTop	06/04-	Z 13 DT	51		330720			
1.4	TwinTop	06/04-	Z 14 XEP	66		330720			
1.8	TwinTop	06/04-	Z 18 XE	92		330720			
VECTRA			**08/95 - 10/08**						
1.6	Mk II (C)	01/06-07/08	Z 16 XEP	77		330720, 330721			
	Mk II (C) GTS	01/06-07/08	Z 16 XEP	77		330720, 330721			
1.6 16V	Mk II (C)	06/04-07/08	Z 16 XE	74		330720, 330721			
	Mk II (C) Estate	06/04-07/08	Z 16 XE	74		330720, 330721			
	Mk II (C) GTS	06/04-07/08	Z 16 XE	74		330720, 330721			
1.6 i	(B)	08/95-10/01	X 16 SZR	55	330363	330712			
	(B) Estate	11/96-	X 16 SZR	55	330363	330712			
	(B) Hatchback	08/95-10/01	X 16 SZR	55	330363	330712			
1.6 i 16V	(B)	08/95-10/01	X 16 XEL, Y 16 XE, Z 16 XE	74	330363	330712			
	(B) Estate	11/96-	X 16 XEL, Y 16 XE, Z 16 XE	74	330363	330712			
	(B) Hatchback	08/95-10/01	X 16 XEL, Y 16 XE, Z 16 XE	74	330363	330712			
1.7 TD	(B)	10/95-11/96	X 17 DT (TC4EE1)	60		330712			
	(B) Hatchback	10/95-11/96	X 17 DT (TC4EE1)	60		330712			
1.8	Mk II (C)	04/02-07/08	Z 18 XEL	81		330720, 330721			
	Mk II (C)	01/06-07/08	Z 18 XER	103		330720, 330721			
	Mk II (C) Estate	01/06-07/08	Z 18 XER	103		330720, 330721			
	Mk II (C) GTS	01/06-07/08	Z 18 XER	103		330720, 330721			
1.8 16V	Mk II (C)	04/02-07/08	Z 18 XE	90		330720, 330721			

OPS Oil Pressure Switches **BLS** Brake Light Switches **TT-RF** Temperature Transmitter and Radiator Fan Switches **RLS** Reverse Light Switches **VAR** Various

ERA S.p.A. Moncalieri (TO) Italy - tel: +39 011 6891511 - fax: +39 011 6472862 - www.eranet.it

Vehicle		Date	Engine	kW	OPS	BLS	TT-RF	RLS	VAR
1.8 16V	Mk II (C) Estate	10/03-08/05	Z 18 XE	90		330720, 330721			
	Mk II (C) GTS	08/02-07/08	Z 18 XE	90		330720, 330721			
1.8 i 16V	(B)	10/95-09/00	X 18 XE, X 18 XE1	85	330363	330712	330651		
	(B) Estate	11/96-09/00	X 18 XE, X 18 XE1	85	330363	330712	330651		
	(B) Hatchback	10/95-09/00	X 18 XE, X 18 XE1	85	330363	330712	330651		
	(B)	09/00-	Z 18 XE	92	330363	330712			
	(B) Estate	09/00-	Z 18 XE	92	330363	330712			
	(B) Hatchback	09/00-	Z 18 XE	92	330363	330712			
1.9 CDTI	Mk II (C)	10/05-07/08	Z 19 DTL	74		330720, 330721			
	Mk II (C) Estate	10/05-07/08	Z 19 DTL	74		330720, 330721			
	Mk II (C) GTS	10/05-07/08	Z 19 DTL	74		330720, 330721			
	Mk II (C)	04/04-08/05	Z 19 DT	88		330720, 330721			
	Mk II (C) Estate	04/04-08/05	Z 19 DT	88		330720, 330721			
	Mk II (C) GTS	04/04-08/05	Z 19 DT	88		330720, 330721			
1.9 CDTI 16V	Mk II (C)	04/04-08/05	Z 19 DTH	110		330720, 330721			
	Mk II (C) Estate	04/04-08/05	Z 19 DTH	110		330720, 330721			
	Mk II (C) GTS	04/04-08/05	Z 19 DTH	110		330720, 330721			
2.0 16V Turbo	Mk II (C)	01/00-10/08	Z 20 NET	129		330720, 330721			
	Mk II (C) Estate	10/03-07/08	Z 20 NET	129		330720, 330721			
	Mk II (C) GTS	03/03-07/08	Z 20 NET	129		330720, 330721			
2.0 DI 16V	(B)	08/95-10/01	X 20 DTL	60		330712			
	(B) Estate	08/95-10/01	X 20 DTL	60		330712			
2.0 Di 16V	(B) Hatchback	08/95-10/01	X 20 DTL	60		330712			
2.0 DTI 16V	(B)	08/95-10/01	X 20 DTH, Y 20 DTH	74		330712			
	(B) Estate	08/95-10/01	X 20 DTH, Y 20 DTH	74		330712			
2.0 DTi 16V	(B) Hatchback	06/97-10/01	X 20 DTH, Y 20 DTH	74		330712			
2.0 DTI 16V	Mk II (C)	04/02-	Y 20 DTH	74		330720, 330721			
	Mk II (C) Estate	10/03-07/08	Y 20 DTH	74		330720, 330721			
	Mk II (C) GTS	08/02-07/08	Y 20 DTH	74		330720, 330721			
2.0 i 16V	(B)	10/95-01/01	X 20 XEV	100	330363	330712	330651		
	(B) Estate	10/95-01/01	X 20 XEV	100	330363	330712	330651		
	(B) Hatchback	10/95-01/01	X 20 XEV	100	330363	330712	330651		
2.2 16V	Mk II (C)	01/02-10/08	Z 22 SE	108		330720, 330721			
	Mk II (C) GTS	08/02-07/08	Z 22 SE	108		330720, 330721			
2.2 direct	Mk II (C)	01/02-10/08	Z 22 YH	114		330720, 330721			
	Mk II (C) Estate	10/03-07/08	Z 22 YH	114		330720, 330721			
	Mk II (C) GTS	10/03-08/05	Z 22 YH	114		330720, 330721			
2.2 DTI 16V	(B)	08/95-10/01	Y 22 DTR	92		330712			
	(B) Estate	08/95-10/01	Y 22 DTR	92		330712			
	(B) Hatchback	08/95-10/01	Y 22 DTR	92		330712			
	Mk II (C)	04/02-	Y 22 DTR	92		330720, 330721			

OPS Oil Pressure Switches **BLS** Brake Light Switches **TT-RF** Temperature Transmitter and Radiator Fan Switches **RLS** Reverse Light Switches **VAR** Various

Vehicle		Date	Engine	kW	OPS	BLS	TT-RF	RLS	VAR
2.2 DTI 16V	Mk II (C) Estate	10/03-07/08	Y 22 DTR	92		330720, 330721			
	Mk II (C) GTS	08/02-07/08	Y 22 DTR	92		330720, 330721			
2.2 i 16V	(B)	08/95-10/01	Z 22 SE	108		330712			
	(B) Estate	08/95-10/01	Z 22 SE	108		330712			
	(B) Hatchback	09/00-	Z 22 SE	108		330712			
2.5 i GSi	(B)	03/98-07/00	X 25 XE	143	330363				
	(B) Estate	05/98-09/99	X 25 XE	143	330363				
2.5 i V6	(B)	09/95-08/00	X 25 XE	125	330363	330712			
	(B) Estate	11/96-08/00	X 25 XE	125	330363	330712			
	(B) Hatchback	09/95-08/00	X 25 XE	125	330363	330712			
2.6 i V6	(B)	09/00-03/02	Y 26 SE	125	330363	330712			
	(B) Estate	09/00-03/02	Y 26 SE	125	330363	330712			
	(B) Hatchback	09/00-	Y 26 SE	125	330363	330712			
2.8 V6 Turbo	Mk II (C)	08/05-07/08	Z 28 NEL	169		330720, 330721			
	Mk II (C) Estate	08/05-07/08	Z 28 NEL	169		330720, 330721			
	Mk II (C) GTS	08/05-07/08	Z 28 NEL	169		330720, 330721			
	Mk II (C)	08/06-07/08	Z 28 NET	184		330720, 330721			
	Mk II (C) GTS	08/06-07/08	Z 28 NET	184		330720, 330721			
	Mk II (C)	08/05-07/08	Z 28 NET	188		330720, 330721			
	Mk II (C) Estate	08/06-07/08	Z 28 NET	188		330720, 330721			
	Mk II (C) GTS	08/05-07/08	Z 28 NET	188		330720, 330721			
3.0 CDTi	Mk II (C)	08/05-07/08	Z 30 DT	135		330720, 330721			
	Mk II (C) Estate	08/05-07/08	Z 30 DT	135		330720, 330721			
	Mk II (C) GTS	08/05-07/08	Z 30 DT	135		330720, 330721			
3.0 V6 CDTI	Mk II (C)	06/03-08/05	Y 30 DT	130		330720, 330721			
	Mk II (C) Estate	10/03-08/05	Y 30 DT	130		330720, 330721			
	Mk II (C) GTS	06/03-08/05	Y 30 DT	130		330720, 330721			
3.2 V6	Mk II (C)	06/03-07/08	Z 32 SE	155		330720, 330721			
	Mk II (C) Estate	10/03-08/05	Z 32 SE	155		330720, 330721			
	Mk II (C) GTS	08/02-07/08	Z 32 SE	155		330720, 330721			
VIVARO			**08/01 -**						
1.9 DI	Box (F7)	08/01-	--	59	330698	330707, 330708, 330728	330692		
	Combi (J7)	08/01-	--	59	330698	330707, 330708, 330728	330692		
1.9 DTI	Box (F7)	08/01-	F9Q 760	74	330698	330707, 330708, 330728	330692		
	Combi (J7)	08/01-	F9Q 760	74	330698	330707, 330708, 330728	330692		
2.0 16V	Box (F7)	08/01-	F4R 720	88	330698	330707, 330708, 330728			
	Combi (J7)	08/01-	F4R 720	88	330698	330707, 330708, 330728			

OPS Oil Pressure Switches **BLS** Brake Light Switches **TT-RF** Temperature Transmitter and Radiator Fan Switches **RLS** Reverse Light Switches **VAR** Various

ERA S.p.A. Moncalieri (TO) Italy - tel: +39 011 6891511 - fax: +39 011 6472862 - www.eranet.it

Vehicle		Date	Engine	kW	OPS	BLS	TT-RF	RLS	VAR
2.0 CDTI	Box (F7)	01/06-	M9R 630	66	330698	330707, 330708, 330728			
	Combi (J7)	01/06-	M9R 630	66	330698	330707, 330708, 330728			
	Flatbed / Chassis (E7)	01/06-	M9R 630	66	330698	330707, 330708, 330728			
	Box (F7)	08/06-	M9R 630	84	330698	330707, 330708, 330728			
	Combi (J7)	08/06-	M9R 630	84	330698	330707, 330708, 330728			
	Flatbed / Chassis (E7)	08/06-	M9R 630	84	330698	330707, 330708, 330728			
2.5 CDTI	Flatbed / Chassis (E7)	04/03-07/06	G9U 730	99	330698	330707, 330708, 330728	330692		
	Box (F7)	08/06-	G9U 630	107	330698	330707, 330708, 330728	330692		
2.5 DTI	Box (F7)	04/04-	G9U 730	99	330698	330707, 330708, 330728	330692		
	Combi (J7)	04/04-	G9U 730	99	330698	330707, 330708, 330728	330692		
ZAFIRA			**11/98 -**						
1.6	Mk II (B) (M75)	07/05-	Z 16 XEP	77		330720, 330721			
	Mk II (B) (M75)	12/07-	A 16 XER	85		330720, 330721			
1.6 16V	Mk I (A) (F75)	04/99-	X 16 XEL	74		330720			
1.6 CNG	Mk I (A) (F75)	09/01-06/05	Z 16 YNG	71		330720, 330721			
1.7 CDTI	Mk II (B) (M75)	04/09-	Z 17 DTJ	81		330720, 330721			
1.8	Mk II (B) (M75)	04/05-	A 18 XER, Z 18 XEP	103		330720, 330721			
1.8 16V	Mk I (A) (F75)	05/99-08/00	X 18 XE1	85		330720			
	Mk I (A) (F75)	09/00-08/05	Z 18 XE	92		330720			
1.9 CDTI	Mk II (B) (M75)	07/05-	Z 19 DT	88		330720, 330721			
	Mk II (B) (M75)	07/05-	Z 19 DTH	110		330720, 330721			
2.0	Mk II (B) (M75)	07/05-	Z 20 LER	147		330720, 330721			
	Mk II (B) (M75)	01/06-	Z 20 LEH	176		330720, 330721			
2.0 DI 16V	Mk I (A) (F75)	10/99-	X 20 DTL	60		330720			
2.0 DTI 16V	Mk I (A) (F75)	04/99-08/05	Y 20 DTH	74		330720			
2.0 GSI Turbo	Mk I (A) (F75)	09/01-06/05	Z 20 LET	141		330720			
2.2	Mk II (B) (M75)	07/05-	Z 22 YH	110		330720, 330721			
2.2 16V	Mk I (A) (F75)	11/98-08/04	Z 22 SE	108		330720			
2.2 D	Mk I (A) (F75)	06/01-06/05	Y 22 DTR	92		330720			
VOLVO									
240			**08/74 - 12/93**						
2.0	(P242, P244)	08/74-07/76	B 20 A	60	330352	330426	330092	330454	
	Kombi (P245)	08/74-07/75	B 20 A	60	330352	330426	330092	330454	
	(P242, P244)	08/76-07/79	B 19 A	66				330454	
	Kombi (P245)	08/76-01/82	B 19 A	66				330454	

OPS Oil Pressure Switches **BLS** Brake Light Switches **TT-RF** Temperature Transmitter and Radiator Fan Switches **RLS** Reverse Light Switches **VAR** Various

Vehicle		Date	Engine	kW	OPS	BLS	TT-RF	RLS	VAR
2.0	(P242, P244)	09/78-08/83	B 19 A, B 19 K	71				330454	
	Kombi (P245)	08/80-12/84	B 19 A, B 19 K	71				330454	
	(P242, P244)	08/84-07/85	B 200 K	76	330351	330426	330092	330240, 330454	
	Kombi (P245)	08/84-07/85	B 200 K	76	330351	330426	330092	330240, 330454	
	Kombi (P245)	08/83-07/93	B 200 E	86	330351	330426	330092	330240, 330454	
	(P242, P244)	10/82-08/84	B 19 ET	100	330352	330426	330092	330240, 330454	
	Kombi (P245)	10/82-08/84	B 19 ET	100	330352	330426	330092	330240, 330454	
2.1	(P242, P244)	08/74-07/75	B 21 A	71				330454	
	Kombi (P245)	08/74-07/75	B 21 A	71				330454	
	(P242, P244)	08/75-07/80	B 21 A	74				330454	
	Kombi (P245)	08/75-07/80	B 21 A	74				330454	
	(P242, P244)	08/80-07/84	B 21 A	79				330454	
	Kombi (P245)	08/80-07/84	B 21 A	79				330454	
	Kombi (P245)	08/80-07/84	B 21 F	80				330454	
	(P242, P244)	08/74-07/80	B 21 E	90				330454	
	Kombi (P245)	08/74-07/79	B 21 E	90				330454	
2.1 Turbo	(P242, P244)	08/80-07/84	B 21 ET	114	330352	330426	330092	330240, 330454	
	Kombi (P245)	08/80-07/85	B 21 ET	114	330352	330426	330092	330240, 330454	
2.3	(P242, P244)	08/84-07/86	B 230 A	81	330351	330426	330092	330240, 330454	
	Kombi (P245)	08/84-07/86	B 230 A	81	330351	330426	330092	330240, 330454	
	(P242, P244)	08/80-07/84	B 23 A	82				330454	
	Kombi (P245)	08/80-07/84	B 23 A	82				330454	
	(P242, P244)	08/86-07/87	B 230 F	83	330351	330426	330092, 330116	330240, 330454	
	Kombi (P245)	08/86-07/87	B 230 F	83	330351	330426	330092, 330116	330240, 330454	
	(P242, P244)	08/86-12/88	B 230 K	85	330351	330426	330092, 330116	330240, 330454	
	Kombi (P245)	08/86-12/88	B 230 K	85	330351	330426	330092, 330116	330240, 330454	
	(P242, P244)	08/83-07/85	B 230 E	96	330351	330426	330092	330240, 330454	
	Kombi (P245)	08/84-07/85	B 230 E	96	330351	330426	330092	330240, 330454	
	(P242, P244)	08/84-12/89	B 23 E	98				330454	
	Kombi (P245)	08/84-12/88	B 23 E	98				330454	
	(P242, P244)	08/80-07/83	B 23 E	100				330454	
	Kombi (P245)	01/83-12/84	B 23 E	100				330454	
	(P242, P244)	08/78-07/80	B 23 E	103				330454	
2.3 CAT	Kombi (P245)	08/91-07/92	B 230 F	100	330351	330426	330092, 330116, 330133	330240, 330454	
2.3 i CAT	(P242, P244)	08/86-07/93	B 230 F	85	330351	330426	330092, 330116, 330133	330240, 330454	
	Kombi (P245)	08/86-07/93	B 230 F	85	330351	330426	330092, 330116, 330133	330240, 330454	
2.4 Diesel	(P242, P244)	08/87-08/93	D 24	58	330004	330426	330284	330240, 330454	
	Kombi (P245)	08/88-08/93	D 24	58	330004	330426	330284	330240, 330454	
	(P242, P244)	08/78-07/85	D 24	60	330004	330426	330284	330240, 330454	
	Kombi (P245)	04/79-08/93	D 24	60	330004	330426	330284	330240, 330454	

OPS Oil Pressure Switches **BLS** Brake Light Switches **TT-RF** Temperature Transmitter and Radiator Fan Switches **RLS** Reverse Light Switches **VAR** Various

ERA S.p.A. Moncalieri (TO) Italy - tel: +39 011 6891511 - fax: +39 011 6472862 - www.eranet.it

Vehicle		Date	Engine	kW	OPS	BLS	TT-RF	RLS	VAR
2.7 GLT6	(P242, P244)	08/79-07/80	B 27 E	104				330454	
	Kombi (P245)	08/79-07/80	B 27 E	104				330454	
260		**08/74 - 07/82**							
2.7	(P262, P264)	08/76-07/82	B 27 A	92				330454	
	Estate (P265)	08/75-07/77	B 27 A	92				330454	
	(P262, P264)	08/74-07/80	B 27 E	103				330454	
	Coupe (P262)	08/77-07/78	B 27 E	103				330454	
	Estate (P265)	07/75-07/82	B 27 E	103				330454	
	(P262, P264)	08/78-07/82	B 27 E	109				330454	
	Estate (P265)	10/78-07/82	B 27 F	109				330454	
2.8	(P262, P264)	08/80-07/82	B 28 A	95				330454	
	(P262, P264)	08/80-07/82	B 28 E	114		330426		330240, 330454	
	Estate (P265)	08/80-07/82	B 28 F	114				330454	
340-360		**08/75 - 07/91**							
1.3	(343, 345)	01/89-12/90	B 13	49		330686			
	Saloon (344)	01/89-12/90	B 13	49		330686			
1.4	(343, 345)	08/82-08/85	B 14.3 E	46	330003	330686	330189		
	(343, 345)	08/86-12/88	B 14.4 S	50	330003	330686	330189		
	Saloon (344)	08/86-12/88	B 14.4 S	50	330003	330686	330189		
	(343, 345)	08/87-07/88	B 14.4 S	51	330003	330686	330189		
	Saloon (344)	08/87-07/88	B 14.4 S	51	330003	330686	330189		
	(343, 345)	08/83-07/86	B 14.4 S	52	330003	330686	330189		
	Saloon (344)	08/83-07/86	B 14.4 S	53	330003	330686	330189		
1.6 Diesel	(343, 345)	08/84-07/91	D 16	40		330686	330189		
	Saloon (344)	08/84-07/91	D 16	40		330686	330189		
1.7	(343, 345)	08/85-07/91	B 17 2 K	59		330686	330092, 330186, 330189		
	Saloon (344)	08/85-07/91	B 17 2 K	59		330686	330092, 330186, 330189		
2.0	Saloon (344)	08/84-07/90	B 200 K	75	330351	330686	330092		
	(343, 345)	08/84-07/87	B 200 K	77	330351	330686	330092		
	Saloon (344)	08/84-07/87	B 200 K	77	330351	330686	330092		
	(343, 345)	08/88-07/89	B 200 F	80	330351	330686	330092		
	Saloon (344)	08/88-07/89	B 200 F	80	330351	330686	330092		
	(343, 345)	08/87-07/88	B 200 F	81	330351	330686	330092		
	Saloon (344)	08/87-07/88	B 200 EA	81	330351	330686	330092		
	(343, 345)	08/86-07/88	B 200 E, B 200 F	82	330351	330686	330092		
	Saloon (344)	08/86-07/88	B 200 EA	82	330351	330686	330092		
	Saloon (344)	08/84-07/86	B 200 E	85	330351	330686	330092		
	(343, 345)	08/84-07/86	B 200 E	87	330351	330686	330092		
	Saloon (344)	08/84-07/86	B 200 E	87	330351	330686	330092		

OPS Oil Pressure Switches **BLS** Brake Light Switches **TT-RF** Temperature Transmitter and Radiator Fan Switches **RLS** Reverse Light Switches **VAR** Various

Vehicle		Date	Engine	kW	OPS	BLS	TT-RF	RLS	VAR
440		**08/88 - 12/96**							
1.6	K (445)	09/88-12/96	B 16 F	61	330017, 330018, 330340		330132, 330631, 330651	330248	
1.7	K (445)	09/88-08/92	B 18 KD	58			330631, 330651		
	K (445)	09/88-08/89	B 18 KP	60			330631, 330651		
	K (445)	09/88-12/96	B 18 KP	64	330017, 330018, 330340		330132, 330312, 330631, 330651	330248	
	K (445)	08/88-07/89	B 18 F	70	330017, 330018		330132, 330133, 330631, 330651		
	K (445)	08/89-12/96	B 18 FP	75	330017, 330018, 330340		330132, 330631, 330651	330248	
	K (445)	09/88-12/96	B 18 EP	78	330017, 330018, 330340		330132, 330631, 330651	330248	
1.7 Turbo	K (445)	08/88-07/96	B 18 FT	88	330017, 330018, 330340		330133, 330631	330248	
	K (445)	01/91-12/96	B 18 FT	90	330017, 330018, 330340		330133, 330631	330248	
1.8	K (445)	08/91-07/96	B 18 U	66	330017, 330018, 330340		330132, 330315, 330631, 330651	330248	
	K (445)	09/95-12/96	B 18 U	66	330017, 330018, 330340		330132, 330315, 330651	330248	
1.9 Turbo-Diesel	K (445)	07/94-12/96	D 19 T	66	330017, 330018, 330340		330132, 330315	330248	
2.0	K (445)	08/93-07/96	B 20 F	80	330017, 330018, 330340		330132, 330651	330248	
	K (445)	08/92-07/95	B 20 F	81	330017, 330018, 330340		330132, 330651	330248	
460		**09/88 - 07/96**							
1.6	L (464)	07/92-07/96	B 16 F	61	330017, 330018, 330340		330132, 330631, 330651	330248	
1.7	L (464)	09/89-08/91	B 18 KD	58			330631, 330651		
	L (464)	09/88-07/96	B 18 KP	64	330017, 330018, 330340		330132, 330312, 330631, 330651	330248	
	L (464)	09/90-07/96	B 18 KP	66	330017, 330018, 330340		330132, 330312, 330631, 330651	330248	
	L (464)	08/89-07/92	B 18 EP	75	330017, 330018, 330340		330132, 330631, 330651	330248	
1.7 Turbo	L (464)	08/89-07/96	B 18 FT	88	330017, 330018, 330340		330133, 330631	330248	
	L (464)	01/91-07/96	B 18 FT	90	330017, 330018, 330340		330133, 330631	330248	
1.8	L (464)	08/91-07/96	B 18 U	66	330017, 330018, 330340		330132, 330315, 330631, 330651	330248	
1.9 Turbo-Diesel	L (464)	07/94-07/96	D 19 T	66	330017, 330018, 330340		330132, 330315	330248	
2.0	L (464)	08/93-07/96	B 20 F	80	330017, 330018, 330340		330132, 330651	330248	
	L (464)	08/92-07/95	B 20 F	81	330017, 330018, 330340		330132, 330651	330248	
480		**04/86 - 07/96**							
1.7	E	08/87-07/89	B 18 F	70	330017, 330018, 330340		330132, 330133, 330315, 330631, 330651	330248	

OPS Oil Pressure Switches **BLS** Brake Light Switches **TT-RF** Temperature Transmitter and Radiator Fan Switches **RLS** Reverse Light Switches **VAR** Various

ERA S.p.A. Moncalieri (TO) Italy - tel: +39 011 6891511 - fax: +39 011 6472862 - www.eranet.it

Vehicle		Date	Engine	kW	OPS	BLS	TT-RF	RLS	VAR
1.7	E	08/89-07/96	B 18 EP	75	330017, 330018, 330340		330132, 330315, 330631, 330651	330248	
	E	04/86-07/89	B 18 E	78	330017, 330018, 330340		330132, 330315, 330631, 330651	330248	
	E	08/86-07/88	B 18 E	80	330017, 330018, 330340		330132, 330315, 330631, 330651	330248	
1.7 Turbo	E	08/87-07/96	B 18 FT	88	330017, 330018, 330340		330133, 330315, 330631	330248	
	E	01/91-07/96	B 18 FT	90	330017, 330018, 330340		330133, 330315, 330631	330248	
2.0	E	08/92-09/95	B 20 F	81	330017, 330018, 330340		330132, 330315, 330651	330248	
740			**04/83 - 08/92**						
2.0	(744)	09/88-08/90	B 200 K	76	330351	330426	330092, 330116	330240, 330454	
	Kombi (745)	09/88-08/90	B 200 K	76	330351	330426	330092, 330116	330240, 330454	
	(744)	09/90-08/92	B 200 F	82	330351	330426	330105	330240	
	Kombi (745)	08/89-07/91	B 200 F	82	330351	330426	330105	330240, 330454	
	(744)	01/87-08/88	B 200 E	86	330351	330426	330092, 330105	330240, 330454	
	Kombi (745)	01/87-08/88	B 200 E	86	330351	330426	330092, 330105	330240, 330454	
	(744)	08/85-07/92	B 200 G	89	330351	330426	330092, 330105	330240, 330454	
	Kombi (745)	08/85-07/92	B 200 G	89	330351	330426	330092, 330105	330240, 330454	
	(744)	12/83-07/84	B 19 ET	110				330454	
	(744)	01/86-08/90	B 200 ET	118	330351	330426	330092, 330105, 330133	330240, 330454	
	(744)	01/85-12/85	B 200 ET	120	330351	330426	330092, 330105, 330133	330240, 330454	
2.0 16V	Kombi (745)	09/87-08/90	B 204 E	100	330351	330426	330105, 330133	330240	
2.0 GLE	(744)	09/87-08/90	B 204 E	103	330351	330426	330105, 330133	330240	
	Kombi (745)	09/87-08/90	B 204 E	103	330351	330426	330105, 330133	330240	
2.0 Turbo	(744)	09/90-08/91	B 200 FT	114	330351	330426	330105, 330133		
	Kombi (745)	09/90-08/91	B 200 FT	114	330351	330426	330105, 330133		
	Kombi (745)	09/87-08/90	B 200 ET	115	330351	330426	330092, 330105, 330133	330240	
2.3	(744)	08/84-07/86	B 230 A	82	330351	330426	330092	330240, 330454	
	Kombi (745)	08/85-07/86	B 230 A	82	330351	330426	330092	330240, 330454	
	(744)	09/85-12/89	B 230 F	83	330351	330426	330092, 330105, 330116, 330133	330240, 330454	
	Kombi (745)	08/85-12/89	B 230 F	83	330351	330426	330092, 330105, 330116, 330133	330240, 330454	
	(744)	08/84-07/90	B 23 A, B 230 F	84	330351	330426	330092, 330105, 330116, 330133	330240, 330454	
	Kombi (745)	09/85-07/90	B 230 K	84	330351	330426	330092, 330116	330240, 330454	
	(744)	08/87-07/92	B 230 F	85	330351	330426	330092, 330105, 330116, 330133	330240, 330454	
	Kombi (745)	08/87-07/92	B 230 F	85	330351	330426	330092, 330105, 330116, 330133	330240, 330454	
	(744)	08/86-07/88	B 230 K	86	330351	330426	330092, 330116	330240, 330454	
	(744)	08/83-07/84	B 23 E	95				330454	

OPS Oil Pressure Switches **BLS** Brake Light Switches **TT-RF** Temperature Transmitter and Radiator Fan Switches **RLS** Reverse Light Switches **VAR** Various

Vehicle		Date	Engine	kW	OPS	BLS	TT-RF	RLS	VAR
2.3	(744)	08/84-07/88	B 230 E	96	330351	330426	330092, 330105	330240, 330454	
	Kombi (745)	08/85-07/88	B 230 E	96	330351	330426	330092, 330105	330240, 330454	
	(744)	08/88-07/90	B 230 FB	100	330351	330426	330105, 330133	330240, 330454	
	Kombi (745)	08/89-07/90	B 230 FB	100	330351	330426	330105, 330133	330240, 330454	
	(744)	08/88-08/92	B 234 F	111	330351	330426	330105, 330133	330240, 330454	
	Kombi (745)	07/89-08/92	B 234 F	111	330351	330426	330105, 330133	330240, 330454	
	(744)	08/88-07/91	B 234 F	114	330351	330426	330105, 330133	330240, 330454	
	Kombi (745)	08/88-07/90	B 234 F	114	330351	330426	330105, 330133	330240, 330454	
	(744)	08/87-07/89	B 234 F	117	330351	330426	330105, 330133	330240, 330454	
	Kombi (745)	08/87-07/89	B 234 F	117	330351	330426	330105, 330133	330240, 330454	
2.3 Turbo	(744)	08/86-07/89	B 230 FT	115	330351	330426	330092, 330105, 330116	330240, 330454	
	Kombi (745)	08/86-07/89	B 230 FT	115	330351	330426	330092, 330105, 330116	330240, 330454	
	(744)	08/89-07/90	B 230 FT	121	330351	330426	330092, 330105, 330116	330240, 330454	
	Kombi (745)	08/89-07/90	B 230 FT, B 230 GT	121	330351	330426	330092, 330105, 330116, 330133	330240, 330454	
	(744)	08/85-12/88	B 230 ET	134	330351	330426	330092, 330105, 330133	330240, 330454	
	Kombi (745)	08/85-07/88	B 230 ET	134	330351	330426	330092, 330105, 330133	330240, 330454	
	(744)	08/89-07/90	B 230 FT	140	330351	330426	330092, 330105, 330116	330240, 330454	
	Kombi (745)	08/89-07/90	B 230 FT	140	330351	330426	330092, 330105, 330116	330240, 330454	
2.4 Diesel	(744)	08/84-07/92	D 24	60	330004	330426	330284	330240	
	Kombi (745)	08/85-07/88	D 24	60	330004	330426	330284	330240	
2.4 TD	(744)	08/85-07/87	D 24 T	80	330004	330426	330284	330240	
	(744)	08/86-10/88	D 24 TIC	90	330004	330426	330284	330240	
2.4 TD Interc.	Kombi (745)	08/86-07/88	D 24 TIC	90	330004	330426	330284	330240	
2.4 Turbo-Diesel	Kombi (745)	09/85-07/92	D 24 T	80	330004	330426	330284	330240	
760			**08/81 - 07/92**						
2.3	(704, 764)	08/84-08/87	B 230 K	84	330351	330426	330092, 330116	330240	
	(704, 764)	01/88-07/92	B 230 FT	119	330351	330426	330105, 330116, 330133	330240, 330454	
2.3 Turbo	(704, 764)	09/87-08/90	B 230 FT	115	330351	330426	330105, 330116, 330133	330240	
	Kombi (704, 765)	09/87-08/90	B 230 FT	115	330351	330426	330105, 330116, 330133	330240	
	(704, 764)	08/82-07/84	B 23 ET	127	330352	330426	330092, 330116	330454	
	(704, 764)	08/84-10/88	B 230 ET	134	330351	330426	330092, 330133	330454	
	Kombi (704, 765)	08/84-08/90	B 230 ET	134	330351	330426	330092, 330105, 330133	330240, 330454	
2.4 D	(704, 764)	01/82-07/92	D 24	60				330454	
	Kombi (704, 765)	01/82-07/92	D 24	60				330454	
2.4 TD Interc.	(704, 764)	08/87-07/92	D 24 TIC	85	330004	330426	330284	330240, 330454	

OPS Oil Pressure Switches **BLS** Brake Light Switches **TT-RF** Temperature Transmitter and Radiator Fan Switches **RLS** Reverse Light Switches **VAR** Various

ERA S.p.A. Moncalieri (TO) Italy - tel: +39 011 6891511 - fax: +39 011 6472862 - www.eranet.it

Vehicle		Date	Engine	kW	OPS	BLS	TT-RF	RLS	VAR
2.4 TD Interc.	Kombi (704, 765)	08/87-07/92	D 24 TIC	85	330004	330426	330284	330240, 330454	
2.4 Turbo Diesel	(704, 764)	04/87-07/92	D 24 T	80				330454	
	(704, 764)	08/82-07/87	D 24 T	82	330004	330426	330284	330240, 330454	
2.8	(704, 764)	01/82-12/87	B 28 A	95		330426		330240, 330454	
	Kombi (704, 765)	05/86-12/87	B 28 A	95		330426		330240, 330454	
	(704, 764)	05/86-08/91	B 280 F	105	330685	330426	330133	330454	
	Kombi (704, 765)	05/86-08/91	B 280 F	105	330685	330426	330133	330454	
	(704, 764)	08/86-07/90	B 280 F	108	330685	330426	330133	330454	
	(704, 764)	08/81-07/88	B 28 E, B 280 E	115	330685	330426	330133	330240, 330454	
	Kombi (704, 765)	08/86-08/90	B 28 E, B 280 E	115	330685	330426	330133	330454	
	(704, 764)	09/87-08/90	B 280 E	125	330685				
780			**04/86 - 07/90**						
2.9		08/87-07/90	B 280 F	108	330685	330426	330133	330240	
		08/86-07/87	B 280 E	115	330685	330426	330133	330240	
850			**06/91 - 10/97**						
2.0	(LS)	08/94-12/96	B 5202 S	93	330351	330426	330108	330240	
	Estate (LW)	08/94-12/96	B 5202 S	93	330351	330426	330108	330240	
	(LS)	06/91-12/96	B 5204 F	105	330351	330426	330108	330240	
	Estate (LW)	02/93-12/96	B 5204 F	105	330351	330426	330108	330240	
2.0 Turbo	(LS)	09/93-10/96	B 5204 T2	132	330351	330426	330108	330240	
	Estate (LW)	09/93-10/97	B 5204 T2	132	330351	330426	330108	330240	
	(LS)	08/93-12/96	B 5204 FT, B 5204 T	155	330351	330426	330108	330240	
	Estate (LW)	02/93-12/96	B 5204 FT, B 5204 T	155	330351	330426	330108	330240	
2.3	(LS)	01/96-10/96	B 5234 FS	106	330351	330426	330108	330240	
	Estate (LW)	01/96-10/96	B 5234 FS	106	330351	330426	330108	330240	
2.3 T5	(LS)	08/93-07/96	B 5234 FT	166	330351	330426	330108	330240	
	Estate (LW)	02/93-12/96	B 5234 FT	166	330351	330426	330108	330240	
2.3 T5 R	(LS)	04/96-10/96	B 5234 T2	176	330351	330426	330108	330240	
	Estate (LW)	04/96-10/96	B 5234 T2	176	330351	330426	330108	330240	
2.3 T5-R	(LS)	08/95-12/96	B 5234 T4	184	330351	330426	330108	330240	
	Estate (LW)	08/95-12/96	B 5234 T4	184	330351	330426	330108	330240	
2.3 Turbo R	(LS)	06/95-10/96	B 5234 T5	177	330351	330426	330108	330240	
	Estate (LW)	06/95-10/97	B 5234 T5	177	330351	330426	330108	330240	
2.4 GLE	(LS)	09/93-10/97	B 5254 T	142	330351	330426	330108	330240	
	Estate (LW)	09/93-10/97	B 5254 T	142	330351	330426	330108	330240	
2.5	(LS)	06/91-07/94	B 5252	103	330351	330426	330108	330240	
	Estate (LW)	08/92-07/94	B 5252	103	330351	330426	330108	330240	
	(LS)	08/94-12/96	B 5252 S	106	330351	330426	330108	330240	
	Estate (LW)	08/94-12/96	B 5252 S	106	330351	330426	330108	330240	
	(LS)	08/91-12/96	B 5254 S	125	330351	330426	330108	330240	

OPS Oil Pressure Switches **BLS** Brake Light Switches **TT-RF** Temperature Transmitter and Radiator Fan Switches **RLS** Reverse Light Switches **VAR** Various

Vehicle		Date	Engine	kW	OPS	BLS	TT-RF	RLS	VAR
2.5	Estate (LW)	09/92-12/96	B 5254 S	125	330351	330426	330108	330240	
2.5 AWD	Estate (LW)	04/96-12/96	B 5254 T	142	330351	330426	330108	330240	
2.5 TDI	(LS)	08/95-12/96	D 5252 T	103	330342	330426	330115	330240	
	Estate (LW)	08/95-12/96	D 5252 T	103	330342	330426	330115	330240	
940			**08/90 - 10/98**						
2.0	(944)	01/92-07/94	B 200 F	82	330351	330426	330105, 330133	330240	
	Kombi (945)	01/92-07/94	B 200 F	82	330351	330426	330105, 330133	330240	
	(944)	09/90-09/93	B 200 G	89	330351	330426	330105, 330133	330240	
	Kombi (945)	09/90-09/93	B 200 G	89	330351	330426	330105, 330133	330240	
2.0 GL	(944)	09/90-04/92	B 204 E	103	330351	330426	330105, 330133	330240	
	Kombi (945)	09/90-04/92	B 204 E	103	330351	330426	330105, 330133	330240	
2.0 GLT	II (944)	10/94-05/97	B 200 GT	139	330351		330105, 330133	330240	
	II Estate (945)	10/94-05/97	B 200 GT	139	330351		330105, 330133	330240	
2.0 Turbo	(944)	08/90-12/94	B 200 FT	114	330351		330105, 330133	330240, 330454	
	II (944)	04/96-10/98	B 200 FT	114	330351		330105, 330133	330240	
	II Estate (945)	04/96-10/98	B 200 FT	114	330351		330105, 330133	330240	
	Kombi (945)	01/91-07/95	B 200 FT	114	330351	330426	330105, 330133	330240, 330454	
2.3	(944)	08/92-07/94	B 230 FD	85	330351	330426	330105, 330133	330240	
	II (944)	08/94-07/95	B 230 FD	85	330351	330426	330105, 330133	330240	
	II Estate (945)	08/94-07/95	B 230 FD	85	330351	330426	330105, 330133	330240	
	Kombi (945)	08/92-07/94	B 230 FD	85	330351	330426	330105, 330133	330240	
	(944)	08/90-12/94	B 230 FB, B 230 G	96	330351	330426	330105, 330133	330240	
	Kombi (945)	08/90-12/94	B 230 FB	96	330351	330426	330105, 330133	330240	
	II Estate (945)	10/94-05/97	B 230 GK	113			330133	330240	
	(944)	08/90-07/91	B 234 F, B 234 G	114	330351	330426	330105, 330133	330240	
	Kombi (945)	08/90-07/91	B 234 F	114	330351	330426	330105, 330133	330240	
2.3 ti	II (944)	01/95-10/98	B 230 FK	99	330351		330105, 330133	330240	
	II Estate (945)	01/95-10/98	B 230 FK	99	330351		330105, 330133	330240	
2.3 Turbo	(944)	08/90-07/94	B 230 FT	121	330351	330426	330105, 330133	330240, 330454	
	II (944)	08/94-10/98	B 230 FT	121	330351	330426	330105, 330133	330240	
	II Estate (945)	08/94-10/98	B 230 FT	121	330351	330426	330105, 330133	330240	
	Kombi (945)	08/90-07/94	B 230 FT	121	330351	330426	330105, 330133	330240, 330454	
	II Estate (945)	08/95-10/98	B 230 FT	126	330351		330105, 330133	330240	
	(944)	08/91-07/93	B 230 FT+	140				330454	
	Kombi (945)	08/91-07/93	B 230 FT+	140				330454	
2.4 D	(944)	08/90-12/94	D 24	60	330004	330426	330284	330240, 330454	
	Kombi (945)	08/90-07/95	D 24	60	330004	330426	330284	330240, 330454	
2.4 TD Interc.	II (944)	08/94-10/98	D 24 TIC	90	330004	330426	330284	330240	
	II Estate (945)	08/94-10/98	D 24 TIC	90	330004	330426	330284	330240	
2.4 TD Intercooler	(944)	08/90-12/94	D 24 TIC	90	330004	330426	330284	330240, 330454	
	Kombi (945)	08/90-08/94	D 24 TIC	90	330004	330426	330284	330240, 330454	

OPS Oil Pressure Switches **BLS** Brake Light Switches **TT-RF** Temperature Transmitter and Radiator Fan Switches **RLS** Reverse Light Switches **VAR** Various

ERA S.p.A. Moncalieri (TO) Italy - tel: +39 011 6891511 - fax: +39 011 6472862 - www.eranet.it

Vehicle		Date	Engine	kW	OPS	BLS	TT-RF	RLS	VAR
2.4 Turbo Diesel	(944)	08/90-12/94	D 24 T	80	330004	330426	330284	330240, 330454	
	Kombi (945)	08/90-07/94	D 24 T	80	330004	330426	330284	330240, 330454	
960			**08/90 - 12/96**						
2.0	(964)	08/90-09/93	B 204 FT	140	330351	330426	330105	330240	
	Kombi (965)	08/90-09/93	B 204 FT	140	330351	330426	330105	330240	
2.3 Turbo	(964)	09/90-08/93	B 230 FT	121	330351	330426	330105, 330133	330240	
	Kombi (965)	09/90-08/93	B 230 FT	121	330351	330426	330105, 330133	330240	
2.4 TD Interc.	(964)	09/91-07/94	D 24 TIC	85	330004	330426	330284	330240	
	Kombi (965)	09/91-07/94	D 24 TIC	85	330004	330426	330284	330240	
2.5	II (964)	07/94-12/96	B 6254 S	125	330351		330108	330240	
	II Estate (965)	08/94-12/96	B 6254 S	125	330351		330108	330240	
2.8 GL	(964)	09/90-05/92	B 280 F	108	330685	330426	330133		
	(964)	09/90-05/92	B 280 E	115	330685	330426	330133		
2.9	(964)	08/90-07/94	B 6304 F	150	330351	330426	330108		
	II (964)	07/94-12/96	B 6304 S	150	330351		330108		
	II Estate (965)	09/94-12/96	B 6304 S	150	330351		330108		
	Kombi (965)	08/90-07/94	B 6304 F, B 6304 S	150	330351	330426	330108		
B 12			**01/92 -**						
B 12		01/92-	TD 122 FH	262	330355				330382, 330398, 330400, 330402, 330403, 330405
		01/92-	TD 122 FL, TD 123 ES	291	330355				330382, 330398, 330400, 330402, 330403, 330405
		01/92-	D12A420	309	330355				330382, 330398, 330400, 330402, 330403, 330405
C30			**10/06 -**						
1.6		10/06-	B 4164 S3	74	330029	330597, 330726, 330740	330144	330263	
1.6 D		10/06-	D 4164 T	80	330026	330597, 330726, 330740	330502	330611	
1.8		10/06-	B 4184 S11	92	330029	330597, 330726, 330740	330585, 330640	330611	
1.8 FlexFuel		01/07-	B 4184 S8	92	330029	330597, 330726, 330740	330585, 330640	330611	
2.0		10/06-	B 4204 S3	107	330029	330597, 330726, 330740	330640	330611	
2.0 D		10/06-	D 4204 T	100	330026	330597, 330726, 330740	330502	330580	
2.4 i		10/06-	B 5244 S4	125	330351	330597, 330740		330603	
D5		10/06-	D 5244 T9	120	330026	330597, 330740	330130		
		10/06-	D 5244 T8	132	330026	330597, 330740	330130	330603	
T5		10/06-	B 5254 T3	162	330351	330597, 330740		330603	
		03/07-	B 5254 T7	169	330351	330597, 330740		330603	

OPS Oil Pressure Switches **BLS** Brake Light Switches **TT-RF** Temperature Transmitter and Radiator Fan Switches **RLS** Reverse Light Switches **VAR** Various

Vehicle		Date	Engine	kW	OPS	BLS	TT-RF	RLS	VAR
C70			**03/97 -**						
2.0	I Convertible	03/98-10/05	B 5204 T2	132	330351		330108	330240	
	I Coupe	03/97-09/02	B 5204 T2	132	330351		330108	330240	
2.0 D	II Convertible	01/08-	D 4204 T	100	330026	330597, 330726, 330740	330502		
2.0 T	I Convertible	03/00-10/05	B 5204 T4	120	330351		330130	330603	
	I Coupe	03/00-09/02	B 5204 T4	120	330351			330240	
	I Convertible	03/98-10/05	B 5204 T3	166	330351		330108	330240	
	I Coupe	03/97-09/02	B 5204 T3	166	330351		330108	330240	
2.3 T-5	I Convertible	03/98-10/05	B 5234 T3	176	330351		330108	330240	
	I Coupe	03/97-09/02	B 5234 T3	176	330351		330108	330240	
2.3 T5	I Convertible	07/02-10/05	B 5234 T9	180	330351		330130	330603	
2.4	II Convertible	03/06-	B 5244 S5	103	330351	330597, 330740		330603	
2.4 i	II Convertible	03/06-	B 5244 S4	125	330351	330597, 330740		330603	
2.4 T	I Convertible	07/02-10/05	B 5244 T7	147	330351		330130	330603	
2.5	I Coupe	03/99-09/02	B 5254 S	121	330351			330240	
	I Coupe	05/99-09/02	B 5254 S	125	330351			330240	
2.5 T	I Convertible	03/98-10/05	B 5244 T, B 5254 T	142	330351		330108	330240	
	I Coupe	03/97-09/02	B 5244 T, B 5254 T	142	330351		330108	330240	
D5	II Convertible	03/06-	D 5244 T8	132	330026	330597, 330740	330130		
T5	II Convertible	03/06-	B 5254 T3	162	330351	330597, 330740		330603	
	II Convertible	03/07-	B 5254 T7	169	330351	330597, 330740		330603	
F 10			**08/77 - 12/94**						
F 10/260		01/83-06/85	TD 100 G, TD 100 GA, TD 101 G	192	330355				330402, 330406, 330476
F 10/280		08/77-02/82	TD 100 B	206	330355				330402, 330406, 330476
F 10/300		10/83-12/86	TD 101 F, TD 101 FA	215	330355				330382, 330402, 330404, 330405, 330406, 330476
		01/87-12/87	TD 101 F, TD 101 FA	215	330355				330382, 330402, 330404, 330405, 330406, 330476
F 10/320		10/87-12/90	TD 102 F, TD 102 FBQ, TD 102 FDQ, TD 102 FF, TD 102 FL, TD 102 FM, TD 103 ES	228	330355				330382, 330402, 330404, 330405, 330406, 330476
		12/90-12/94	TD 102 F, TD 102 FBQ, TD 102 FDQ, TD 102 FF, TD 102 FL, tD 103 ES	228	330355				330382, 330402, 330404, 330405, 330406, 330476
F 12			**08/77 - 12/94**						
F 12/320		01/87-12/87	TD 121 G	235	330355				330382, 330402, 330404, 330405, 330406, 330476

OPS Oil Pressure Switches **BLS** Brake Light Switches **TT-RF** Temperature Transmitter and Radiator Fan Switches **RLS** Reverse Light Switches **VAR** Various

ERA S.p.A. Moncalieri (TO) Italy - tel: +39 011 6891511 - fax: +39 011 6472862 - www.eranet.it

Vehicle		Date	Engine	kW	OPS	BLS	TT-RF	RLS	VAR
F 12/320,F 12/330		08/77-12/86	TD 120 G, TD 121 G, TD 121 GD	235	330355				330402, 330406
F 12/360		01/88-12/90	TD 122 F, TD 122 FH	262	330355				330382, 330402, 330404, 330405, 330406, 330476
		12/90-12/94	TD 122 F, TD 122 FH	262	330355				330382, 330402, 330404, 330405, 330406, 330476
F 12/370		08/77-12/86	TD 121 F	272	330355				330402, 330406, 330476
		01/87-12/87	TD 121 F	272	330355				330402, 330406, 330476
F 12/400		01/88-12/90	TD 122 FL, TD 122 FS	291	330355				330382, 330393, 330402, 330404, 330405, 330406, 330408, 330476
		12/90-12/94	TD 122 FL, TD 122 FS	291	330355				330382, 330393, 330402, 330404, 330405, 330406, 330408, 330476
F 12/400,F 12/410		01/88-12/94	TD 122 FL, TD 122 FS, TD 123 ES	291	330355				330382, 330402, 330404, 330405, 330406, 330476
F 16			**10/87 - 12/94**						
F 16/470		01/88-12/89	TD 162 F, TD 162 FJ, TD 162 FL, TD 162 FS	342	330355				330382, 330402, 330404, 330405, 330406, 330476
F 16/485		01/90-12/92	TD 162 F, TD 162 FJ, TD 162 FL, TD 162 FS	357	330355				330382, 330402, 330404, 330405, 330406, 330476
F 16/500		01/92-12/94	TD 163 ES	368	330355				330382, 330402, 330404, 330405, 330476
FH 12			**08/93 -**						
FH 12-500		09/01-	D12D500	368					330382, 330400, 330402, 330405
FH 12/340		08/93-	D12A340, D12C340, D12D340	250					330382, 330392, 330393, 330396, 330400, 330402, 330405, 330407, 330408
FH 12/380		08/93-	D12A380, D12C380, D12D380	279					330382, 330396, 330400, 330402, 330405
FH 12/420		08/93-	D12A420, D12C420, D12D420	309					330382, 330396, 330400, 330402, 330405
FH 12/460		08/98-	D12C460, D12D460	338					330382, 330400, 330402, 330405
FH 16			**08/93 -**						
FH 16		08/93-12/99	D16A470	346					330382, 330393, 330400, 330402, 330405, 330408

Vehicle		Date	Engine	kW	OPS	BLS	TT-RF	RLS	VAR
FH 16/470		08/93-12/99	D16A470	346					330382, 330393, 330400, 330402, 330405, 330408
FH 16/520		08/93-12/02	D16A520, D16B520	382					330382, 330400, 330402, 330405
FH 16/540, FH 16/550		01/03-	D16C550	396					330382, 330400, 330402, 330405
FH 16/580		09/06-	D16E580	426					330400, 330402
FH 16/610		01/03-	D16C610	449					330382, 330400, 330402, 330405
FH 16/660		09/06-	D16E660	485					330400, 330402
FL 10			**09/85 - 09/98**						
FL 10/280		09/85-12/90	TD 101 G	202					330382, 330402, 330404, 330405, 330406, 330476
FL 10/320		12/95-09/98	D10A320	235					330382, 330402, 330404, 330405, 330406, 330476
FL 10/360		12/95-09/98	D10A360	265					330382, 330393, 330402, 330404, 330405, 330406, 330408, 330476
FL 10H/320		12/95-09/98	D10A320	235					330402, 330406
FL 10H/360		12/95-09/98	D10A360	265					330402, 330406
FL 12			**09/95 - 09/98**						
FL 12/380		09/95-09/98	D12A380	279					330382, 330393, 330402, 330405, 330406, 330408, 330476
FL 12/420		09/95-09/98	D12A420	309					330382, 330402, 330405, 330406, 330476
FL 12H/380		09/95-09/98	D12A380	279					330402, 330406
FL 12H/420		09/95-09/98	D12A420	309					330402, 330406
FL 4			**02/86 - 10/89**						
FL 408		02/86-10/89	TD 41 G	82	330355				
FL 6			**09/85 - 03/00**						
FL 608		10/85-12/99	TD 61 G, TD 61 GA	108	330355				330382, 330405
		01/91-12/99	D6A180, TD 63 E	126	330355				330382, 330405
		01/93-12/99	D6A210,TD 63 ES	154	330355				330382, 330405
FL 610		09/85-11/94	TD 61 G	112	330355				330382, 330405
		09/85-11/94	TD 61 F	150	330355				330382, 330405
FL 611		09/85-11/94	TD 61 G, TD 61 GA	108	330355				330382, 330405
		09/85-03/00	D6A180, TD 61 GB, TD 61 GC, TD 61 GS, TD 63 E	126	330355				330382, 330405
		12/94-03/00	D6A210, TD 63 ES	154	330355				330382, 330405

OPS Oil Pressure Switches **BLS** Brake Light Switches **TT-RF** Temperature Transmitter and Radiator Fan Switches **RLS** Reverse Light Switches **VAR** Various

ERA S.p.A. Moncalieri (TO) Italy - tel: +39 011 6891511 - fax: +39 011 6472862 - www.eranet.it

Vehicle		Date	Engine	kW	OPS	BLS	TT-RF	RLS	VAR
FL 612		09/85-12/99	D6A180, TD 61 GB, TD 61 GC, TD 61 GS, TD 63 E	131	330355				330382, 330405
		11/91-12/99	D6A210, TD 63 ES	154	330355				330382, 330405
		12/95-12/99	D6A230	169	330355				330382, 330405
FL 614		09/85-03/00	TD 61 GB, TD 61 GC, TD 61 GS, TD 63 E	131	330355				330382, 330405
		12/95-03/00	D6A180	132	330355				330382, 330405
		09/85-03/00	D6A210, TD 61 F, TD 63 ES	150	330355				330382, 330405
		12/95-03/00	D6A210	154	330355				330382, 330405
		12/95-03/00	D6A250	184	330355				330382, 330405
FL 615		11/91-03/00	D6A180, TD 63 E	132	330355				330382, 330405
		12/95-03/00	D6A230	169	330355				330382, 330405
FL 618		11/91-03/00	D6A180, TD 63 E	132	330355				330382, 330405
		11/91-03/00	D6A210, TD 63 ES	154	330355				330382, 330405
		12/95-03/00	D6A230	169	330355				330382, 330405
		12/95-03/00	D6A250	184	330355				330382, 330405
FL 7			**09/85 - 09/98**						
FL 7/230		09/85-09/98	D7B230, TD 71 F, TD 71 FQ, TD 73 E	169					330382, 330393, 330402, 330404, 330405, 330406, 330408, 330476
FL 7/260		11/91-09/98	D7B260, TD 73 ES	191					330382, 330393, 330402, 330404, 330405, 330406, 330408, 330476
FL 7/290		10/93-09/98	D7A285	210					330382, 330393, 330402, 330404, 330405, 330406, 330408, 330476
FM 10			**09/98 - 12/01**						
FM 10/320		04/99-12/01	D10B320	235					330400
FM 10/360		04/99-12/01	D10B360	265					330400
FM 12			**08/98 - 09/05**						
FM 12/340		08/98-09/05	D12C340, D12D340	250					330396, 330400
FM 12/380		08/98-09/05	D12C380, D12D380	279					330396, 330400
FM 12/420		08/98-09/05	D12C420, D12D420	309					330396, 330400
FM 7			**08/98 - 12/01**						
FM 7/250		08/98-12/01	D7C250	184					330400
FM 7/290		08/98-12/01	D7C290	213					330400
FM 9			**12/01 - 09/05**						
FM 9/260		12/01-09/05	D9A260	191					330396, 330400

OPS Oil Pressure Switches **BLS** Brake Light Switches **TT-RF** Temperature Transmitter and Radiator Fan Switches **RLS** Reverse Light Switches **VAR** Various

Vehicle		Date	Engine	kW	OPS	BLS	TT-RF	RLS	VAR
FM 9/300		12/01-09/05	D9A300	221					330396, 330400
FM 9/340		12/01-09/05	D9A340	250					330396, 330400
FM 9/380		12/01-09/05	D9A380	279					330396, 330400
N 10			**01/73 - 12/89**						
N 10/270		01/73-12/89	TD 100 G, TD 101 G	202	330355				330382, 330402, 330404, 330405, 330406, 330476
N 10/300		01/73-12/89	TD 100 B, TD 101 F	220	330355				330382, 330402, 330404, 330405, 330406, 330476
NH 12			**05/99 -**						
NH 12/380		05/99-	D12C380	279					330382, 330393, 330402, 330405, 330408
NH 12/420		05/99-	D12C420	309					330382, 330393, 330402, 330405, 330408
S40			**07/95 -**						
1.6	II (MS)	01/05-	B 4164 S3	74	330029	330597, 330726, 330740	330144	330263	
	I (VS)	09/95-08/99	B 4164 S	77	330340, 330351, 330630	330055	330108, 330316, 330652	330248	
	I (VS)	03/99-12/03	B 4164 S2	80	330340, 330351, 330630	330055	330316, 330652	330248	
1.6 D	II (MS)	01/05-	D 4164 T	81	330026	330597, 330726, 330740	330502	330611	
1.8	I (VS)	07/95-08/99	B 4184 S, B 4184 S3	85	330340, 330351, 330630	330055	330108, 330316, 330652	330240, 330248	
	I (VS)	03/99-12/03	B 4184 S2, B 4184 S9	90	330340, 330351, 330630	330055	330316, 330652	330248	
	II (MS)	04/04-	B 4184 S11	92	330029	330597, 330726, 330740	330585, 330640	330611	
1.8 FlexFuel	II (MS)	01/06-	B 4184 S8	92	330029	330597, 330726, 330740	330585, 330640	330611	
1.8 i	I (VS)	06/01-12/03	B 4184 SJ	90	330022	330055	330130, 330316, 330619, 330658	330247	
	I (VS)	03/98-12/03	B 4184 SM	92	330022	330055	330130, 330619, 330658	330247	
1.9 DI	I (VS)	03/99-07/00	D 4192 T2	70	330017, 330018, 330340	330055	330139, 330153, 330477	330248	
	I (VS)	07/00-12/03	D 4192 T4	75	330017, 330018	330055	330153, 330477, 330692	330240	
	I (VS)	07/00-12/03	D 4192 T3	85	330017, 330018	330055	330153, 330477, 330692	330240	
1.9 T4	I (VS)	05/97-07/00	B 4194 T, B 4194 T2	147	330351, 330630	330055	330316, 330652	330240	
1.9 TD	I (VS)	07/95-08/99	D 4192 T	66	330017, 330018, 330340	330055	330139, 330153, 330477	330248	
2.0	I (VS)	07/95-12/03	B 4204 S, B 4204 S2	100	330340, 330351, 330630	330055	330108, 330316, 330652	330240, 330248	
	I (VS)	07/95-08/99	B 4204 S	103	330340, 330351, 330630	330055	330108, 330316, 330652	330248	

OPS Oil Pressure Switches **BLS** Brake Light Switches **TT-RF** Temperature Transmitter and Radiator Fan Switches **RLS** Reverse Light Switches **VAR** Various

ERA S.p.A. Moncalieri (TO) Italy - tel: +39 011 6891511 - fax: +39 011 6472862 - www.eranet.it

Vehicle		Date	Engine	kW	OPS	BLS	TT-RF	RLS	VAR
2.0	II (MS)	10/06-	B 4204 S3	107	330029	330597, 330726, 330740	330640	330611	
2.0 D	II (MS)	01/04-	D 4204 T	100	330026	330597, 330726, 330740	330502	330580, 330603	
2.0 D4	II (MS)	07/05-	D 4204 T2	96		330597, 330726, 330740			
2.0 T	I (VS)	10/97-07/00	B 4204 T	118	330351, 330630	330055	330316, 330652	330240	
	I (VS)	06/01-12/03	B 4204 T3	120	330351, 330630	330055	330316, 330652	330240	
2.0 T4	I (VS)	07/00-12/03	B 4204 T5	147	330351, 330630	330055	330316, 330652	330240	
2.4	II (MS)	01/04-	B 5244 S5	103	330351	330597, 330740		330603	
2.4 AWD	II (MS)	08/06-	B 5244 S4	125		330597, 330740			
2.4 D5	II (MS)	03/06-	D 5244 T8	132	330026	330597	330130		
T5	II (MS)	01/04-	B 5254 T3	162	330351	330597, 330740		330603	
	II (MS)	03/07-	B 5254 T7	169	330351	330597, 330740		330603	
T5 AWD	II (MS)	04/04-	B 5254 T3	162	330351	330597, 330740		330603	
	II (MS)	03/07-	B 5254 T7	169	330351	330597, 330740		330603	
S60			**07/00 -**						
2.0 T		09/01-	B 5204 T5	132	330351		330130		
2.3 T5		07/00-09/02	B 5234 T7	195	330351		330130		
2.4		11/00-	B 5244 S2	103	330351		330130		
		11/00-	B 5244 S	125	330351		330130		
2.4 AWD		02/04-	B 5244 T5	191	330351		330130		
2.4 Bifuel		06/02-	B 5244 SG2	103	330351		330130		
2.4 D		09/05-	D 5244 T7	93			330130		
		12/01-	D 5244 T2	96	330351		330130		
2.4 D5		07/01-	D 5244 T	120	330351		330130		
		09/05-	D 5244 T4	136			330130	330603	
2.4 T		11/00-	B 5244 T3	147	330351		330130		
2.4 T AWD		11/01-	B 5244 T3	147	330351		330130		
2.4 T5		04/04-	B 5244 T5	191	330351		330130	330603	
2.5 T		02/04-	B 5254 T2	154	330351		330130	330603	
2.5 T AWD		04/04-	B 5254 T2	154	330351		330130	330603	
R 2,5 T AWD		03/03-	B 5254 T4	221	330351		330130	330603	
T5		11/00-	B 5234 T3	184	330351		330130		
S70			**11/96 - 11/00**						
2.0	(P80_)	01/97-11/00	B 5202 S	93	330351		330108	330240	
	(P80_)	01/97-11/00	B 5204 T2	132	330351		330108	330240	
2.0 Turbo	(P80_)	01/97-11/00	B 5204 T3	166	330351		330108	330240	
2.3	(P80_)	04/99-09/00	B 5234 T7	195	330351		330108		
2.3 AWD	(P80_)	04/99-09/00	B 5234 T7	195	330351		330108		
2.3 T-5	(P80_)	01/97-11/00	B 5234 T3	176	330351		330108	330240	
2.3 T5 AWD	(P80_)	07/97-09/00	B 5234 T4	184	330351		330108	330240	

OPS Oil Pressure Switches **BLS** Brake Light Switches **TT-RF** Temperature Transmitter and Radiator Fan Switches **RLS** Reverse Light Switches **VAR** Various

Vehicle		Date	Engine	kW	OPS	BLS	TT-RF	RLS	VAR
2.3 Turbo	(P80_)	01/97-11/00	B 5234 FT+	184	330351		330108	330240	
2.4	(P80_)	08/99-11/00	B 5244 S2	103	330351				
	(P80_)	01/97-11/00	B 5254 S	125	330351		330108	330240	
2.4 AWD	(P80_)	04/99-09/00	B 5244 S2	103	330351				
2.4 Blu-Fuel	(P80_)	07/97-09/00	B 5244 SG	103	330351			330240	
2.4 T5 AWD	(P80_)	11/96-04/99	B 5254 T	142	330351		330108	330240	
2.4 Turbo	(P80_)	01/97-11/00	B 5244 T, B 5254 T	142	330351		330108	330240	
2.5	(P80_)	01/97-11/00	B 5252 S	106	330351		330108	330240	
2.5 Bifuel	(P80_)	07/99-11/00	B 5244 SG	103	330351				
	(P80_)	10/98-11/00	GB 5252 S	106	330351		330108		
2.5 TDI	(P80_)	01/97-11/00	D 5252 T	103	330342		330115	330240	
2.5 TDi AWD	(P80_)	10/99-09/00	D 5252 T	103	330342		330115	330240	
S80		**05/98 -**							
2.0	II	01/08-	B 4204 S3	107		330597, 330726, 330733, 330734	330640	330611	
	(TS, XY)	06/98-07/06	B 5204 T4	120	330351			330603	
2.0 FlexFuel	II	01/08-	B 4204 S4	107	330029, 330351	330597, 330726, 330733, 330734	330585	330611	
2.0 T	(TS, XY)	12/99-07/06	B 5204 T5	132	330351		330130	330603	
	(TS, XY)	06/98-07/06	B 5204 T3	166	330351			330603	
2.0 TDi	II	02/08-	D 4204 T	100		330597, 330726, 330733, 330734			
2.3 R	(TS, XY)	04/00-08/05	B 5234 T7	195	330351		330130		
2.4	(TS, XY)	01/99-07/06	B 5244 S2	103	330351		330130	330603	
	(TS, XY)	01/99-07/06	B 5244 S	125	330351		330130	330603	
2.4 Bifuel	(TS, XY)	09/01-07/06	B 5244 SG2	103	330351		330130	330603	
2.4 D	(TS, XY)	10/01-07/06	D 5244 T2	96	330351		330130	330603	
	II	03/06-	D 5244 T	120	330026	330597, 330726, 330733, 330734	330130	330603	
	II	01/08-	D 5244 T5	120		330597, 330726, 330733, 330734			
2.4 D5	(TS, XY)	08/01-07/06	D 5244 T	120	330351		330130	330603	
2.4 LTP	(TS, XY)	06/04-07/06	B 5244 T4	132	330351		330130		
2.4 T	(TS, XY)	06/00-07/06	B 5244 T3	147	330351		330130	330603	
2.4 T5 AWD	(TS, XY)	04/00-09/03	B 5244 T3	147	330351		330130		
2.5 T	II	03/06-	B 5254 T6	147	330351	330597, 330726, 330733, 330734		330603	
	(TS, XY)	03/03-07/06	B 5254 T2	154	330351		330130	330603	
2.5 T AWD	II	10/06-	B 5254 T6	147		330597, 330726, 330733, 330734			
	(TS, XY)	07/03-07/06	B 5254 T2	154	330351		330130	330603	
2.5 T FlexFuel	II	05/08-	B 5254 T8	147		330597, 330726, 330733, 330734		330603	
2.5 TDI	(TS, XY)	01/99-07/06	D 5252 T	103	330342		330115	330603	
2.8 T6	(TS, XY)	05/98-07/06	B 6284 T	200	330351				

OPS Oil Pressure Switches **BLS** Brake Light Switches **TT-RF** Temperature Transmitter and Radiator Fan Switches **RLS** Reverse Light Switches **VAR** Various

ERA S.p.A. Moncalieri (TO) Italy - tel: +39 011 6891511 - fax: +39 011 6472862 - www.eranet.it

Vehicle		Date	Engine	kW	OPS	BLS	TT-RF	RLS	VAR
2.9	(TS, XY)	03/99-07/06	B 6294 S	147	330351			330603	
	(TS, XY)	05/98-07/06	B 6304 S3	150	330351			330603	
3.0	(TS, XY)	06/01-07/06	B 6294 S2	144	330351				
3.0 T6	(TS, XY)	06/01-07/06	B 6294 T	200	330351				
3.2	II	03/06-	B 6324 S	175	330351	330597, 330734			
3.2 AWD	II	01/07-	B 6324 S	175	330351	330597, 330734			
4.4	II	08/06-	B 8444 S	232	330022				
4.4 V8 AWD	II	03/06-	B 8444 S	232	330022	330597, 330734			
D5	II	03/06-	D 5244 T4	136	330026	330597, 330726, 330733, 330734	330130	330603	
D5 AWD	II	01/07-	D 5244 T4	136	330026	330597, 330726, 330733, 330734	330130	330603	
T6 AWD	II	01/07-	B 6304 T2	210	330351	330597, 330734			
S90			**11/96 - 12/98**						
2.5		11/96-10/98	B 6254 FS	125	330351		330108	330240	
2.9		01/97-05/98	B 6304 S2	132	330351		330108	330240	
		01/97-05/98	B 6304 G	150	330351		330108		
V40			**07/95 - 06/04**						
1.6	Estate (VW)	12/95-08/99	B 4164 S	77	330340, 330351, 330630	330055	330108, 330316, 330652	330248	
	Estate (VW)	03/99-06/04	B 4164 S2	80	330340, 330351, 330630	330055	330316, 330652	330248	
1.8	Estate (VW)	07/95-08/99	B 4184 S, B 4184 S3	85	330340, 330351, 330630	330055	330108, 330316, 330652	330240, 330248	
	Estate (VW)	03/99-06/04	B 4184 S2, B 4184 S9	90	330340, 330351, 330630	330055	330108, 330316, 330652	330248	
1.8 i	Estate (VW)	06/01-06/04	B 4184 SJ	90	330022	330055	330130, 330316, 330619, 330658	330247	
	Estate (VW)	03/98-06/04	B 4184 SM	92	330022	330055	330130, 330619, 330658	330247	
1.9 DI	Estate (VW)	03/99-07/00	D 4192 T2	70	330017, 330018, 330340	330055	330139, 330153, 330477	330248	
	Estate (VW)	07/00-06/04	D 4192 T4	75	330017, 330018	330055	330153, 330477, 330692	330240	
	Estate (VW)	07/00-06/04	D 4192 T3	85	330017, 330018	330055	330153, 330477, 330692	330240	
1.9 T4	Estate (VW)	05/97-07/00	B 4194 T	147	330351, 330630	330055	330316, 330652	330240	
1.9 TD	Estate (VW)	07/95-08/99	D 4192 T	66	330017, 330018, 330340	330055	330139, 330153, 330477	330248	
2.0	Estate (VW)	07/95-08/99	B 4204 S	103	330340, 330351, 330630	330055	330108, 330316, 330652	330248	
2.0 T	Estate (VW)	10/97-07/00	B 4204 T	118	330351, 330630	330055	330316, 330652	330240	
	Estate (VW)	06/01-06/04	B 4204 T3	120	330351, 330630	330055	330316, 330652	330240	
	Estate (VW)	07/99-06/01	B 4204 T2	121	330351, 330630	330055	330316, 330652	330240	
2.0 T4	Estate (VW)	07/00-06/04	B 4204 T5	147	330351, 330630	330055	330316, 330652	330240	

OPS Oil Pressure Switches **BLS** Brake Light Switches **TT-RF** Temperature Transmitter and Radiator Fan Switches **RLS** Reverse Light Switches **VAR** Various

Vehicle		Date	Engine	kW	OPS	BLS	TT-RF	RLS	VAR
V50			**04/04 -**						
1.6	(MW)	01/05-	B 4164 S3	74	330029	330597, 330726, 330740	330144	330263	
1.6 D	(MW)	01/05-	D 4164 T	81	330026	330597, 330726, 330740	330502	330611	
1.8	(MW)	04/04-	B 4184 S11	92	330029	330597, 330726, 330740	330585, 330640	330611	
1.8 FlexFuel	(MW)	01/05-	B 4184 S8	92	330029	330597, 330726, 330740	330585, 330640	330611	
2.0	(MW)	10/06-	B 4204 S3	107	330029	330597, 330726, 330740	330640	330611	
2.0 D	(MW)	04/04-	D 4204 T	100	330026	330597, 330726, 330740	330502	330580, 330603	
2.4	(MW)	04/04-	B 5244 S5	103	330351	330597, 330740		330603	
	(MW)	04/04-	B 5244 S	125	330351	330597, 330740		330603	
2.4 AWD	(MW)	08/06-	B 5244 S4	125		330597, 330740			
2.4 D5	(MW)	03/06-	D 5244 T8	132	330026	330597, 330740	330130		
2.4 Tdi	(MW)	05/07-	D 5244 T9	120		330597			
T5	(MW)	04/04-	B 5254 T3	162	330351	330597, 330740		330603	
	(MW)	03/07-	B 5254 T7	169	330351	330597, 330740		330603	
T5 AWD	(MW)	04/04-	B 5254 T3	162	330351	330597, 330740		330603	
	(MW)	03/07-	B 5254 T7	169	330351	330597, 330740		330603	
V70			**11/96 -**						
2.0	I Estate (P80_)	01/97-03/00	B 5202 S	93	330351		330108	330240	
	III Estate	10/07-	B 4204 S3	107	330029, 330351	330597, 330726, 330733, 330734	330640	330611	
	I Estate (P80_)	01/97-03/00	B 5204 T4	120	330351			330240	
	I Estate (P80_)	01/97-03/00	B 5204 T2	132	330351		330108	330240	
2.0 D	III Estate	10/07-	D 4204 T	100	330026	330597, 330726, 330733, 330734	330502	330580	
2.0 FlexiFuel	III Estate	01/08-	B 4204 S4	107	330029, 330351	330597, 330726, 330733, 330734	330585	330611	
2.0 T	II Estate (P80_)	07/01-	B 5204 T5	132	330351		330130	330603	
2.0 Turbo	I Estate (P80_)	01/97-03/00	B 5204 T3	166	330351		330108	330240	
2.0 Turbo AWD	I Estate (P80_)	01/97-03/00	B 5204 T3	166	330351		330108	330240	
2.3 AWD	I Estate (P80_)	12/98-02/00	B 5234 T7, B 5234 T8	195	330351		330108		
	II Estate (P80_)	10/00-09/04	B 5234 T7, B 5234 T8	195	330351		330130		
2.3 T AWD	I Estate (P80_)	04/97-03/00	B 5234 FT+	184	330351		330108	330240	
2.3 T-5	I Estate (P80_)	01/97-03/00	B 5234 T3	176	330351		330108	330240	
2.3 T-5 AWD	I Estate (P80_)	01/97-03/00	B 5234 T3	176	330351		330108	330240	
2.3 T5	II Estate (P80_)	03/00-	B 5234 T3	184	330351		330130		
2.3 Turbo	I Estate (P80_)	01/97-03/00	B 5234 FT+	184	330351		330108	330240	
2.4	I Estate (P80_)	08/99-05/00	B 5244 S2	103	330351				
	II Estate (P80_)	03/00-	B 5244 S2	103	330351		330130	330603	
	I Estate (P80_)	01/97-05/00	B 5254 S	125	330351		330108	330240	

OPS Oil Pressure Switches **BLS** Brake Light Switches **TT-RF** Temperature Transmitter and Radiator Fan Switches **RLS** Reverse Light Switches **VAR** Various

ERA S.p.A. Moncalieri (TO) Italy - tel: +39 011 6891511 - fax: +39 011 6472862 - www.eranet.it

Vehicle		Date	Engine	kW	OPS	BLS	TT-RF	RLS	VAR
2.4	II Estate (P80_)	03/00-	B 5244 S	125	330351		330130	330603	
2.4 Bifuel	I Estate (P80_)	08/99-03/00	B 5244 SG	103	330351				
	II Estate (P80_)	09/01-	B 5244 SG	103	330351		330130	330603	
2.4 D	II Estate (P80_)	05/05-	D 5244 T7	93			330130	330603	
	II Estate (P80_)	12/01-	D 5244 T2	96	330351		330130		
	III Estate	08/07-	D 5244 T5	120	330026	330597, 330726, 330733, 330734	330130	330603	
2.4 D5	II Estate (P80_)	08/01-	D 5244 T	120	330351		330130	330603	
	II Estate (P80_)	12/05-	D 5244 T4	136			330130	330603	
2.4 D5 AWD	II Estate (P80_)	03/03-	D 5244 T2	120	330351		330130	330603	
	II Estate (P80_)	12/05-	D 5244 T4	136			330130	330603	
2.4 T	II Estate (P80_)	03/00-	B 5244 T3	147	330351		330130		
2.4 T AWD	II Estate (P80_)	09/01-	B 5244 T3	147	330351		330130		
2.4 T5	II Estate (P80_)	04/04-	B 5244 T5	191	330351		330130	330603	
2.4 Turbo	I Estate (P80_)	01/97-03/00	B 5244 T, B 5254 T	142	330351		330108	330240	
2.5	I Estate (P80_)	01/97-03/00	B 5252 S	106	330351		330108	330240	
2.5 AWD	I Estate (P80_)	03/99-03/00	--	195	330351				
2.5 Bifuel	I Estate (P80_)	10/98-08/99	GB 5252 S	106	330351		330108		
2.5 T	III Estate	08/07-	B 5254 T6	147	330351	330597, 330726, 330733, 330734		330603	
	II Estate (P80_)	04/04-	B 5254 T2	154	330351		330130	330603	
2.5 T AWD	II Estate (P80_)	09/02-	B 5254 T2	154	330351		330130	330603	
2.5 T FlexiFuel	III Estate	05/08-	B 5254 T8	147		330597, 330726, 330733, 330734		330603	
2.5 TDI	I Estate (P80_)	01/97-05/00	D 5252 T	103	330342		330115	330240	
	II Estate (P80_)	03/00-	D 5252 T	103	330342		330115		
2.5 Turbo AWD	I Estate (P80_)	01/97-05/00	B 5244 T, B 5254 T	142	330351		330108	330240	
3.2	III Estate	08/07-	B 6324 S	175	330351	330597, 330734			
3.2 AWD	III Estate	08/07-	B 6324 S	175	330351	330597, 330734			
D5	III Estate	08/07-	D 5244 T4	136	330026	330597, 330726, 330733, 330734	330130	330603	
D5 AWD	III Estate	10/07-	D 5244 T4	136	330026	330597, 330726, 330733, 330734	330130	330603	
R 2,5 T AWD	II Estate (P80_)	03/03-	B 5254 T4	221	330351		330130	330603	
T6 AWD	III Estate	08/07-	B 6304 T2	210	330351	330597, 330734			
V90			**11/96 - 12/98**						
2.9	Estate	01/97-12/98	B 6304 S2	132	330351		330108	330240	
	Estate	01/97-12/98	B 6304 G	150	330351		330108		
XC 90			**10/02 -**						
2.5 T		10/02-	B 5254 T2	154	330351		330130	330603	
D5		10/02-	D 5244 T	120	330351		330130	330603	
		05/06-	D 5244 T4	136	330351		330130	330603	
T6		10/02-	B 6294 T	200	330351				

OPS Oil Pressure Switches **BLS** Brake Light Switches **TT-RF** Temperature Transmitter and Radiator Fan Switches **RLS** Reverse Light Switches **VAR** Various

Vehicle		Date	Engine	kW	OPS	BLS	TT-RF	RLS	VAR
V8		01/05-	B 8444 S	232	330022				
XC70			**08/07 -**						
2.4 D AWD	II	08/07-	D 5244 T5	120	330026	330597, 330726, 330733, 330734	330130	330603	
3.2 AWD	II	08/07-	B 6324 S	175	330351	330597, 330734			
D5 AWD	II	08/07-	D 5244 T4	136	330026	330597, 330726, 330733, 330734	330130	330603	
XC70 CROSS COUNTRY			**03/00 -**						
2.4 D5 AWD		12/05-	D 5244 T4	136			330130	330603	
2.4 D5 XC AWD		09/02-	D 5244 T	120	330351		330130	330603	
2.4 T XC AWD		03/00-09/02	B 5244 T3	147	330351		330130		
2.5 T XC AWD		09/02-	B 5254 T2	154	330351		330130	330603	
VW									
BORA			**10/98 - 09/05**						
1.4 16V	(1J2)	03/00-05/05	AHW, AKQ, APE, AXP, BCA	55	330320	330440, 330710, 330725	330141, 330161, 330199, 330230, 330280, 330282	330264, 330544, 330579	
	Estate (1J6)	09/01-05/05	AHW, AXP, BCA	55	330320	330440, 330710, 330725	330141, 330161, 330199, 330230, 330280, 330282	330264, 330544, 330579	
1.6	(1J2)	10/98-05/05	AEH, AKL, APF	74	330324	330440, 330706, 330710, 330725	330141, 330161, 330199, 330230, 330280, 330282, 330496, 330546	330264, 330544, 330579	
	Estate (1J6)	05/99-05/05	AEH, AKL, APF	74	330324	330440, 330706, 330710, 330725	330141, 330161, 330199, 330230, 330280, 330282, 330496, 330546	330264, 330544, 330579	
	(1J2)	08/00-05/05	AVU, BFQ, BJH	75	330324	330440, 330710, 330725	330141, 330161, 330199, 330230, 330496, 330546	330264, 330544, 330579	
	Estate (1J6)	08/00-05/05	AVU, BFQ	75	330324	330440, 330710, 330725	330141, 330161, 330199, 330230, 330496, 330546	330264, 330544, 330579	
1.6 16V	(1J2)	05/00-05/05	ATN, AUS, AZD, BCB	77	330320, 330324	330440, 330710, 330725	330141, 330161, 330199, 330230, 330280, 330282, 330496	330264, 330544, 330579	
	Estate (1J6)	02/00-05/05	ATN, AUS, AZD, BCB	77	330320, 330324	330440, 330710, 330725	330141, 330161, 330199, 330230, 330280, 330282, 330496	330264, 330544, 330579	
1.6 FSI	(1J2)	01/02-05/05	BAD	81	330320	330710, 330725	330141, 330199, 330230, 330546	330264, 330544, 330579	
	Estate (1J6)	01/02-05/05	BAD	81	330320	330710, 330725	330141, 330199, 330230, 330546	330264, 330544, 330579	
1.8	(1J2)	10/98-05/05	AGN, BAF	92	330324	330440, 330706, 330725	330141, 330161, 330199, 330230, 330280, 330282, 330496	330264, 330544, 330579	

OPS Oil Pressure Switches **BLS** Brake Light Switches **TT-RF** Temperature Transmitter and Radiator Fan Switches **RLS** Reverse Light Switches **VAR** Various

ERA S.p.A. Moncalieri (TO) Italy - tel: +39 011 6891511 - fax: +39 011 6472862 - www.eranet.it

Vehicle		Date	Engine	kW	OPS	BLS	TT-RF	RLS	VAR
1.8 4motion	(1J2)	02/99-05/05	AGN	92	330324	330440, 330706, 330725	330141, 330161, 330199, 330230, 330280, 330282, 330496	330264, 330544, 330579	
	Estate (1J6)	05/99-05/05	AGN	92	330324	330440, 330706, 330725	330141, 330161, 330199, 330230, 330280, 330282, 330496	330264, 330544, 330579	
	(1J2)	10/00-05/01	ARX	110		330440	330141, 330161, 330199, 330230, 330280, 330282	330264, 330544, 330579	
1.8 T	(1J2)	05/00-05/05	AGU, ARX, AUM, BAE	110	330324	330440, 330710, 330725	330141, 330161, 330199, 330230, 330280, 330282, 330496	330264, 330544, 330579	
	Estate (1J6)	05/00-05/05	AGU, ARX, AUM	110	330324	330440, 330710, 330725	330141, 330161, 330199, 330230, 330280, 330282, 330496	330264, 330544, 330579	
	(1J2)	03/02-05/05	AUQ	132		330710, 330725	330141, 330161, 330199, 330230	330264, 330544, 330579	
	Estate (1J6)	05/02-05/05	AUQ	132		330710, 330725	330141, 330161, 330199, 330230	330264, 330544, 330579	
1.9 SDI	(1J2)	10/98-05/05	AGP, AQM	50	330325	330440, 330710, 330725	330141, 330161, 330199, 330230, 330280, 330282, 330496	330264, 330544, 330579	
1.9 TDI	(1J2)	10/98-06/01	AGR, ALH	66	330325	330440, 330706, 330710, 330725	330123, 330141, 330161, 330199, 330230, 330280, 330282, 330496	330264, 330544, 330579	
	Estate (1J6)	07/04-05/05	AGR	66	330325	330440, 330710, 330725	330123, 330141, 330161, 330199, 330230, 330280, 330282	330264, 330544, 330579	
	(1J2)	09/00-05/05	ATD, AXR	74	330325	330440, 330710, 330725	330141, 330161, 330199, 330230, 330280, 330282, 330496	330264, 330544, 330579	
	Estate (1J6)	09/00-05/05	ATD, AXR	74	330325	330440, 330710, 330725	330141, 330161, 330199, 330230, 330280, 330282, 330496	330264, 330544, 330579	
	(1J2)	10/98-06/01	AHF, ASV	81	330325	330440, 330706, 330710, 330725	330141, 330161, 330164, 330199, 330230, 330280, 330282, 330496	330264, 330544, 330579	
	Estate (1J6)	05/99-06/01	AHF, ASV	81	330325	330440, 330706, 330710, 330725	330141, 330161, 330164, 330199, 330230, 330280, 330282, 330496	330264, 330544, 330579	
	(1J2)	12/98-06/01	AJM, AUY	85	330321, 330325	330440, 330710, 330725	330141, 330161, 330199, 330230, 330280, 330282, 330496	330264, 330544, 330579	
	Estate (1J6)	05/99-06/01	AJM, AUY	85	330321, 330325	330440, 330710, 330725	330141, 330161, 330199, 330230, 330280, 330282, 330496	330264, 330544, 330579	

OPS Oil Pressure Switches **BLS** Brake Light Switches **TT-RF** Temperature Transmitter and Radiator Fan Switches **RLS** Reverse Light Switches **VAR** Various

Vehicle		Date	Engine	kW	OPS	BLS	TT-RF	RLS	VAR
1.9 TDI	(1J2)	11/00-05/05	ASZ	96	330325	330440, 330710, 330725	330141, 330199, 330230, 330280, 330282, 330496	330264, 330544, 330579	
	Estate (1J6)	11/00-05/05	ASZ	96	330325	330440, 330710, 330725	330141, 330199, 330230, 330280, 330282, 330496	330264, 330544, 330579	
	(1J2)	05/00-05/05	ARL	110	330325	330440, 330710, 330725	330141, 330161, 330199, 330230, 330280, 330282, 330496	330264, 330544, 330579	
	Estate (1J6)	05/01-05/05	ARL	110	330325	330440, 330710, 330725	330141, 330161, 330199, 330230, 330280, 330282	330264, 330544, 330579	
1.9 TDI 4motion	(1J2)	02/99-06/01	AGR	66	330325	330440, 330710, 330725	330123, 330141, 330161, 330199, 330230, 330280, 330282	330264, 330544, 330579	
	(1J2)	09/00-05/05	ATD	74	330325	330440, 330710, 330725	330141, 330161, 330199, 330230, 330280, 330282	330264, 330544, 330579	
	Estate (1J6)	09/00-05/05	ATD	74	330325	330440, 330710, 330725	330141, 330161, 330199, 330230, 330280, 330282	330264, 330544, 330579	
	(1J2)	02/99-06/01	AJM, AUY	85	330321, 330325	330440, 330710, 330725	330141, 330161, 330199, 330230, 330280, 330282, 330496	330264, 330544, 330579	
	Estate (1J6)	05/99-06/01	AJM, AUY	85	330321, 330325	330440, 330710, 330725	330141, 330161, 330199, 330230, 330280, 330282, 330496	330264, 330544, 330579	
	(1J2)	11/00-05/05	ASZ	96	330325	330440, 330710, 330725	330141, 330199, 330230, 330280, 330282, 330496	330264, 330544, 330579	
	Estate (1J6)	11/00-05/05	ASZ	96	330325	330440, 330710, 330725	330141, 330199, 330230, 330280, 330282, 330496	330264, 330544, 330579	
	(1J2)	05/00-05/05	ARL	110	330325	330440, 330710, 330725	330141, 330161, 330199, 330230, 330280, 330282, 330496	330264, 330544, 330579	
	Estate (1J6)	05/01-05/05	ARL	110	330325	330440, 330710, 330725	330141, 330161, 330199, 330230, 330280, 330282	330264, 330544, 330579	
2.0	(1J2)	10/98-05/05	APK, AQY, AZG, AZH, AZJ	85	330324	330440, 330710, 330725	330141, 330161, 330199, 330230, 330280, 330282, 330496	330264, 330544, 330579	
	Estate (1J6)	05/99-05/05	APK, AQY, AZG, AZH, AZJ	85	330324	330440, 330710, 330725	330141, 330161, 330199, 330230, 330280, 330282, 330496	330264, 330544, 330579	
2.0 4motion	(1J2)	04/00-05/05	AZH, AZJ	85	330324	330440, 330710, 330725	330141, 330161, 330199, 330230, 330280, 330282, 330496	330264, 330544, 330579	

OPS Oil Pressure Switches **BLS** Brake Light Switches **TT-RF** Temperature Transmitter and Radiator Fan Switches **RLS** Reverse Light Switches **VAR** Various

ERA S.p.A. Moncalieri (TO) Italy - tel: +39 011 6891511 - fax: +39 011 6472862 - www.eranet.it

Vehicle		Date	Engine	kW	OPS	BLS	TT-RF	RLS	VAR
2.0 4motion	Estate (1J6)	04/00-05/05	AZH, AZJ	85	330324	330440, 330710, 330725	330141, 330161, 330199, 330230, 330280, 330282, 330496	330264, 330544, 330579	
2.3 V5	(1J2)	10/98-10/00	AGZ	110	330321, 330324	330440, 330706, 330725	330123, 330141, 330161, 330199, 330230, 330280, 330282, 330497	330264, 330544, 330579	
	Estate (1J6)	05/99-10/00	AGZ	110	330321, 330324	330440, 330706, 330725	330123, 330141, 330161, 330199, 330230, 330280, 330282, 330497	330264, 330544, 330579	
	(1J2)	10/00-05/05	AQN	125	330324	330440, 330710, 330725	330123, 330141, 330199, 330230, 330280, 330282, 330497	330264, 330544, 330579	
	Estate (1J6)	10/00-05/05	AQN	125	330324	330440, 330710, 330725	330123, 330141, 330199, 330230, 330280, 330282, 330497	330264, 330544, 330579	
2.3 V5 4motion	(1J2)	12/98-10/00	AGZ	110	330321, 330324	330440, 330706, 330725	330123, 330141, 330161, 330199, 330230, 330280, 330282, 330497	330264, 330544, 330579	
	Estate (1J6)	05/99-10/00	AGZ	110	330321, 330324	330440, 330706, 330725	330123, 330141, 330161, 330199, 330230, 330280, 330282, 330497	330264, 330544, 330579	
	(1J2)	10/00-05/05	AQN	125	330324	330440, 330710, 330725	330123, 330141, 330199, 330230, 330280, 330282, 330497	330264, 330544, 330579	
	Estate (1J6)	10/00-05/05	AQN	125	330324	330440, 330710, 330725	330123, 330141, 330199, 330230, 330280, 330282, 330497	330264, 330544, 330579	
2.8 V6 4motion	(1J2)	03/99-05/05	AQP, AUE, BDE	150	330318, 330324	330440, 330710, 330725	330123, 330141, 330199, 330230, 330280, 330282, 330497	330264, 330544, 330579	
	Estate (1J6)	05/99-05/05	AQP, AUE, BDE	150	330318, 330324	330440, 330710, 330725	330123, 330141, 330199, 330230, 330280, 330282, 330497	330264, 330544, 330579	
2.8 VR6	Estate (1J6)	03/00-05/00	AUE	150				330579	
CADDY		**08/82 -**							
1.4	II Estate (9K9B)	11/95-01/04	AEX, AKV, APQ, AUD	44	330318, 330320, 330342	330072	330141, 330161, 330162, 330280, 330286, 330287, 330646	330255, 330442, 330544	
	II Box (9K9A)	08/00-01/04	AUA	55	330320	330072	330141, 330161, 330162, 330280, 330286, 330287	330255, 330442, 330544	
	III Box (2KA, 2KH, 2CA, 2CH)	03/04-	BCA	55	330320	330503, 330545	330230, 330546	330264, 330579	
	III Estate (2KB, 2KJ)	03/04-	BCA	55	330320	330503, 330545	330230, 330546	330264, 330579	

OPS Oil Pressure Switches **BLS** Brake Light Switches **TT-RF** Temperature Transmitter and Radiator Fan Switches **RLS** Reverse Light Switches **VAR** Various

Vehicle		Date	Engine	kW	OPS	BLS	TT-RF	RLS	VAR
1.4 16V	II Estate (9K9B)	08/00-01/04	AUA	55	330320	330072	330141, 330161, 330162, 330280, 330286, 330287, 330646	330255, 330442, 330544	
	III Box (2KA, 2KH, 2CA, 2CH)	05/06-	BUD	59	330320	330503, 330545	330230, 330546	330264, 330579	
	III Estate (2KB, 2KJ)	05/06-	BUD	59	330320	330503, 330545	330230, 330546	330264, 330579	
1.5	I (14)	08/82-07/83	JB	51	330322, 330337, 330341, 330342	330063	330103, 330162, 330296, 330307	330233, 330442, 330448	
1.6	I (14)	01/83-07/92	EW	55	330322, 330337, 330341, 330342	330063	330103, 330162, 330296, 330307	330233, 330442, 330448	
	II Estate (9K9B)	11/95-05/97	1F	55	330342	330072	330161, 330162, 330280, 330286, 330287, 330646	330255, 330442, 330544	
	II Estate (9K9B)	06/97-09/00	AEE	55	330342	330072	330161, 330162, 330280, 330286, 330287, 330646	330255, 330442, 330544	
	II Pickup (9U7)	06/96-12/00	AEE	55		330072	330116, 330269, 330287	330544	
	III Estate (2KB, 2KJ)	03/05-	BRY	74				330579	
	III Box (2KA, 2KH, 2CA, 2CH)	04/04-	BGU	75	330324	330503, 330545	330230, 330546	330264, 330579	
	III Estate (2KB, 2KJ)	04/04-	BGU	75	330324	330503, 330545	330230, 330546	330264, 330579	
1.6 D	I (14)	08/82-07/92	JK, ME	40	330322, 330337, 330341, 330342	330063	330103, 330162, 330296	330233, 330442, 330448	
1.7 SDI	II Box (9K9A)	07/96-09/00	AHB	42	330318, 330325, 330341, 330342	330072	330123, 330128, 330280, 330286	330442, 330544	
	II Estate (9K9B)	07/96-09/00	AHB	42	330318, 330325, 330341, 330342	330072	330123, 330128, 330280, 330286	330442, 330544	
1.8	I (14)	08/85-07/92	JH	70	330322, 330337, 330341, 330342	330063	330103, 330127, 330162, 330286, 330296, 330308	330233, 330442, 330448	
1.9 D	II Box (9K9A)	11/95-01/04	1Y	47	330321, 330341, 330342	330072	330123, 330128, 330280, 330286	330442, 330544	
	II Estate (9K9B)	11/95-01/04	1Y	47	330321, 330341, 330342	330072	330123, 330128, 330280, 330286	330442, 330544	
	II Pickup (9U7)	06/96-12/00	AEF	47			330128		
1.9 SDI	II Box (9K9A)	11/95-01/04	AEY, AYQ	47	330318, 330321, 330325, 330341, 330342	330072	330123, 330128, 330280, 330286	330442, 330544	
	II Estate (9K9B)	11/95-01/04	AEY, AYQ	47	330318, 330321, 330325, 330341, 330342	330072	330123, 330128, 330280, 330286	330442, 330544	
1.9 TDI	III Box (2KA, 2KH, 2CA, 2CH)	09/05-	BSU	55	330325	330503, 330545	330546	330264, 330579	
	III Estate (2KB, 2KJ)	09/05-	BSU	55	330325	330503, 330545	330546	330264, 330579	
	II Box (9K9A)	09/96-01/04	1Z, AHU, ALH	66	330318, 330321, 330325, 330341, 330342	330072	330123, 330128, 330141, 330164, 330280	330442, 330544	
	II Estate (9K9B)	10/96-01/04	AHU, ALE, ALH	66	330318, 330321, 330325, 330341, 330342	330072	330123, 330128, 330141, 330164, 330280	330442, 330544	
	III Box (2KA, 2KH, 2CA, 2CH)	04/04-	BJB	77	330325	330503, 330545	330230, 330546	330264, 330579	
	III Estate (2KB, 2KJ)	04/04-	BJB	77	330325	330503, 330545	330230, 330546	330264, 330579	
1.9 TDI 4motion	III Estate (2KB, 2KJ)	05/08-	BLS	77	330325	330503, 330545	330546	330264, 330579	

OPS Oil Pressure Switches **BLS** Brake Light Switches **TT-RF** Temperature Transmitter and Radiator Fan Switches **RLS** Reverse Light Switches **VAR** Various

ERA S.p.A. Moncalieri (TO) Italy - tel: +39 011 6891511 - fax: +39 011 6472862 - www.eranet.it

Vehicle		Date	Engine	kW	OPS	BLS	TT-RF	RLS	VAR
2.0 EcoFuel	III Box (2KA, 2KH, 2CA, 2CH)	04/06-	BSX	80	330324	330503, 330545	330230, 330546	330264, 330579	
	III Estate (2KB, 2KJ)	04/06-	BSX	80	330324	330503, 330545	330230, 330546	330264, 330579	
2.0 SDI	III Box (2KA, 2KH, 2CA, 2CH)	03/04-	BDJ	51	330325	330503, 330545	330230, 330546	330264, 330579	
	III Estate (2KB, 2KJ)	03/04-	BDJ	51	330325	330503, 330545	330230, 330546	330264, 330579	
2.0 TDI	III Box (2KA, 2KH, 2CA, 2CH)	09/07-	BMM	103	330325	330503, 330545	330546	330264, 330579	
	III Estate (2KB, 2KJ)	09/07-	BMM	103	330325	330503, 330545	330546	330264, 330579	
60 1.4	II Box (9K9A)	11/95-01/04	AEX, APQ, AUD	44	330318, 330320, 330342	330072	330141, 330161, 330162, 330280, 330286, 330287	330255, 330442, 330544	
75 1.6	II Box (9K9A)	11/95-09/00	AEE	55	330342	330072	330161, 330162, 330280, 330286, 330287	330255, 330442, 330544	
	II Box (9K9A)	11/95-05/97	1F	55	330342	330072	330161, 330162, 330280, 330286, 330287, 330646	330255, 330442, 330544	
CORRADO			**08/87 - 12/95**						
1.8 16V	(53I)	04/89-07/92	KR	100	330322, 330337, 330341, 330342	330440	330280, 330284	330744	
1.8 G60	(53I)	09/88-09/93	PG	118	330322, 330337, 330341, 330342, 330370	330440	330103, 330161, 330280, 330286	330744	
2.0 i	(53I)	04/93-12/95	2E, ADY	85	330322, 330337, 330341, 330342, 330370	330440	330123, 330161, 330163, 330280, 330287	330744	
2.0 i 16V	(53I)	08/91-12/95	9A	100	330322, 330337, 330341, 330342	330440	330280, 330284	330744	
2.9 VR6	(53I)	08/91-12/95	ABV	140	330322, 330342	330440	330123, 330152, 330163, 330164, 330280, 330286	330744	
CRAFTER 30-35			**04/06 -**						
2.5 TDI	Bus (2E_)	04/06-	BJJ	65	330325	330727, 330737	330546		
	Bus (2E_)	04/06-	BJK	80	330325	330727, 330737	330546		
	Bus (2E_)	04/06-	BJL	100	330325	330727, 330737	330546		
	Bus (2E_)	04/06-	BJM	120	330325	330727, 330737	330546		
CRAFTER 30-50			**04/06 -**						
2.5 TDI	Box (2E_)	04/06-	BJJ	65	330325	330727, 330737	330546		
	Flatbed / Chassis (2F_)	04/06-	BJJ	65	330325	330727, 330737	330546		
	Box (2E_)	04/06-	BJK	80	330325	330727, 330737	330546		
	Flatbed / Chassis (2F_)	04/06-	BJK	80	330325	330727, 330737	330546		
	Box (2E_)	04/06-	BJL	100	330325	330727, 330737	330546		
	Flatbed / Chassis (2F_)	04/06-	BJL	100	330325	330727, 330737	330546		
	Box (2E_)	04/06-	BJM	120	330325	330727, 330737	330546		
	Flatbed / Chassis (2F_)	04/06-	BJM	120	330325	330727, 330737	330546		
DERBY			**02/77 - 12/84**						
1.0	(86C, 80)	10/81-12/84	GL	29	330004	330063	330172	330234	

OPS Oil Pressure Switches **BLS** Brake Light Switches **TT-RF** Temperature Transmitter and Radiator Fan Switches **RLS** Reverse Light Switches **VAR** Various

Vehicle		Date	Engine	kW	OPS	BLS	TT-RF	RLS	VAR
1.1	(86)	02/77-09/81	HB	37	330004	330063	330172	330234	
1.3	(86C, 80)	08/83-12/84	HK	40	330004, 330322, 330337	330045, 330440	330103, 330268, 330296	330234	
	(86)	02/77-09/81	HH	44	330004	330063	330172	330234	
	(86C, 80)	09/82-12/84	GK	55	330004, 330322, 330337	330045, 330440	330103, 330268, 330296	330234	
EOS			**03/06 -**						
1.4 TSI	(1F7, 1F8)	11/07-	CAXA	90				330579	
	(1F7, 1F8)	05/08-	CAVD	118				330579	
1.6 FSI	(1F7, 1F8)	06/06-05/08	BLF	85	330320		330546	330264, 330579	
2.0 FSI	(1F7, 1F8)	03/06-05/08	BVY	110			330546	330264, 330579	
2.0 TDI	(1F7, 1F8)	06/06-05/08	BMM	103	330325		330546	330264, 330579	
2.0 TDI 16V	(1F7, 1F8)	05/08-	CBAB	103				330579	
2.0 TFSI	(1F7, 1F8)	03/06-	BWA	147			330546	330264, 330579	
2.0 TSI	(1F7, 1F8)	11/09-	CCZB	155				330579	
3.2 V6	(1F7, 1F8)	06/06-	BUB	184	330321		330546	330264, 330579	
FOX			**10/03 -**						
1.0	(5Z1, 5Z3)	10/03-	--	52	330320	330503, 330545, 330725	330141	330579	
	(5Z1, 5Z3)	10/03-	AQZ, BJE	53	330320	330503, 330545, 330725	330141	330579	
	(5Z1, 5Z3)	04/08-	CCNA	54	330320	330503, 330545, 330725	330141	330579	
1.0 Alcohol	(5Z1, 5Z3)	10/03-	BJE	53	330320	330503, 330545, 330725	330141	330579	
1.0 Total Flex	(5Z1, 5Z3)	03/08-	CCNA	54	330320	330503, 330545, 330725	330141	330579	
1.2	(5Z1, 5Z3)	04/05-	BMD	40	330320	330503, 330545, 330725	330230, 330546	330579	
1.4	(5Z1, 5Z3)	04/05-	BKR	55	330320	330503, 330545, 330725	330546	330579	
1.4 TDI	(5Z1, 5Z3)	04/05-	BNM	51	330325	330503, 330545, 330725	330230, 330546	330579	
1.6	(5Z1, 5Z3)	10/03-	BAH	74	330320	330503, 330545, 330725	330141	330579	
	(5Z1, 5Z3)	10/05-	BAH, BLH, BPA, CCRA	74	330320	330503, 330545	330141		
1.6 Alcohol	(5Z1, 5Z3)	10/03-	--	76	330320	330503, 330545, 330725	330141	330579	
1.6 Total Flex	(5Z1, 5Z3)	10/03-	BJA, BPA, CCRA	74	330320	330503, 330545, 330725	330141	330579	
1.9 D	(5Z1, 5Z3)	12/07-	ASY	47	330325	330503, 330545, 330725	330141, 330230	330579	
GOLF			**04/74 -**						
1.0	II (19E, 1G1)	11/83-08/85	GN	33	330322, 330337, 330342	330045, 330440	330284, 330285, 330296, 330307		
	II (19E, 1G1)	08/85-10/91	HZ	37	330322, 330337, 330341, 330342	330045, 330440	330103, 330114, 330161, 330162, 330284, 330285, 330296, 330307	330234	

OPS Oil Pressure Switches **BLS** Brake Light Switches **TT-RF** Temperature Transmitter and Radiator Fan Switches **RLS** Reverse Light Switches **VAR** Various

ERA S.p.A. Moncalieri (TO) Italy - tel: +39 011 6891511 - fax: +39 011 6472862 - www.eranet.it

Vehicle		Date	Engine	kW	OPS	BLS	TT-RF	RLS	VAR
1.1	I (17)	04/74-07/83	FA, GG	37	330368	330414		330448	
	I (17)	01/81-07/83	FJ	38	330368	330414		330448	
	I (17)	01/81-07/83	HC	44	330368	330414		330448	
1.2 TSI	VI (5K1)	05/09-	CBZB	77				330579	
	VI Variant (AJ5)	08/09-	CBZB	77				330579	
1.3	II (19E, 1G1)	08/85-12/87	NU	37	330322, 330337, 330341, 330342	330045, 330440	330114, 330161, 330162, 330285, 330296, 330307	330233, 330234, 330448	
	I Cabriolet (155)	08/83-07/86	HK	40	330337, 330342	330063, 330440	330103, 330162, 330284, 330285, 330286, 330296, 330307	330234, 330442	
	II (19E, 1G1)	08/83-06/87	HK, MH	40	330322, 330337, 330341, 330342	330045, 330440	330103, 330114, 330161, 330162, 330284, 330285, 330296, 330307	330233, 330234, 330448	
1.3	II (19E, 1G1)	08/83-10/86	GT	43	330322, 330337, 330342	330045, 330440	330284, 330296, 330307	330233, 330234, 330448	
	I (17)	08/79-07/83	GF	44	330368	330414		330448	
1.3 CAT	II (19E, 1G1)	06/86-12/92	2G, MH, NZ	40	330322, 330337, 330341, 330342	330045, 330440	330103, 330114, 330115, 330127, 330161, 330162, 330285, 330286, 330296, 330307, 330308	330233, 330234, 330448	
1.4	III (1H1)	11/91-08/97	ABD, AEX	40	330322, 330337, 330341, 330342	330440	330123, 330280, 330282, 330287, 330296	330255, 330442	
	III Variant (1H5)	07/93-04/99	ABD	40	330322, 330341, 330342	330440	330123, 330280, 330282, 330287, 330296	330255, 330442	
	III (1H1)	10/91-08/97	ABD, AEX	44	330322, 330337, 330341, 330342	330440	330123, 330280, 330282, 330287, 330296	330255, 330442	
	III Variant (1H5)	07/93-04/99	ABD, AEX, APQ	44	330322, 330337, 330341, 330342	330440	330123, 330280, 330282, 330287, 330296	330255, 330442	
	V Variant (1K5)	06/07-	BUD	59	330320		330230, 330546	330264, 330579	
	VI (5K1)	10/08-	CGGA	59				330579	
	VI Variant (AJ5)	07/09-	BUD	59				330579	
1.4 16V	IV (1J1)	08/97-06/05	AHW, AKQ, APE, AXP, BCA	55	330319, 330320	330440, 330706, 330710, 330725	330141, 330161, 330199, 330230, 330280, 330282, 330496, 330497	330261, 330264, 330544, 330579, 330744	
	IV Variant (1J5)	05/99-06/06	AHW, AKQ, APE, AXP, BCA	55	330319, 330320	330440, 330706, 330710, 330725	330141, 330161, 330199, 330230, 330280, 330282, 330496, 330497	330261, 330264, 330544, 330579, 330744	
	PLUS (5M1, 521)	01/05-	BCA	55	330320	330503, 330545	330230, 330546	330264, 330579	
	V (1K1)	10/03-	BCA	55	330320	330503, 330545	330141, 330230, 330546	330264, 330579	
	PLUS (5M1, 521)	05/06-	BUD	59	330320	330503, 330545	330230, 330546	330264, 330579	
	V (1K1)	05/06-	BUD	59	330320	330503, 330545	330230, 330546	330264, 330579	
1.4 FSI	PLUS (5M1, 521)	07/05-	BLN	66	330320	330503, 330545	330230, 330546	330264, 330579	

OPS Oil Pressure Switches **BLS** Brake Light Switches **TT-RF** Temperature Transmitter and Radiator Fan Switches **RLS** Reverse Light Switches **VAR** Various

Vehicle		Date	Engine	kW	OPS	BLS	TT-RF	RLS	VAR
1.4 FSI	V (1K1)	10/03-	BKG, BLN	66	330320	330503, 330545	330141, 330230, 330546	330264, 330579	
1.4 TSI	PLUS (5M1, 521)	06/07-	CAXA	90	330320		330546	330264, 330579	
	V (1K1)	05/07-	CAXA	90	330320		330546	330264, 330579	
	V Variant (1K5)	06/07-	CAXA	90	330320		330230, 330546	330264, 330579	
	VI (5K1)	10/08-	CAXA	90				330579	
	VI Variant (AJ5)	07/09-	CAXA	90				330579	
	PLUS (5M1, 521)	05/06-06/08	BMY	103	330320	330503, 330545	330546	330264, 330579	
	V (1K1)	05/06-	BMY	103	330320	330503, 330545	330546	330264, 330579	
	V Variant (1K5)	06/07-	BMY	103	330320		330546	330264, 330579	
	PLUS (5M1, 521)	06/08-	CAVD	118	330320		330546	330264, 330579	
	V Variant (1K5)	07/08-	CAVD	118	330320		330546	330264	
	PLUS (5M1, 521)	05/06-06/08	BLG	125	330320	330503, 330545	330546	330264, 330579	
	V (1K1)	11/05-	BLG	125	330320	330503, 330545	330546	330264, 330579	
	V Variant (1K5)	06/07-	BLG	125	330320		330546	330264, 330579	
1.5	I (17)	08/77-07/83	JB	51	330368	330414		330448	
	I (17)	04/74-12/75	FH	51		330414		330448	
	I Cabriolet (155)	01/79-11/83	JB	51		330414		330448	
1.5 D	I (17)	08/76-07/80	CK	37	330368	330414		330448	
1.6	II (19E, 1G1)	10/86-12/92	PN	51	330322, 330337, 330341, 330342	330045, 330440	330103, 330114, 330127, 330161, 330162, 330285, 330286, 330296, 330307	330233, 330448	
	I Cabriolet (155)	04/86-02/90	RE	53		330414		330448	
	II (19E, 1G1)	02/86-10/91	RF	53	330322, 330323, 330337, 330341, 330342	330045, 330440	330103, 330114, 330127, 330161, 330162, 330286, 330296	330233, 330448	
	I (17)	08/75-02/84	EM, FN, FP	55		330414		330448	
	I Cabriolet (155)	08/83-04/92	EW	55	330323, 330337, 330342	330045, 330063, 330414, 330440	330103, 330162, 330284, 330286, 330296, 330307	330233, 330234, 330442, 330448	
	II (19E, 1G1)	08/83-07/92	ABN, EZ, HM	55	330322, 330323, 330337, 330341, 330342	330045, 330440	330103, 330114, 330127, 330161, 330162, 330284, 330285, 330286, 330296, 330307	330233, 330442, 330448	
	III (1H1)	09/92-08/97	ABU, AEA, AEE	55	330322, 330337, 330341, 330342	330440	330123, 330280, 330282, 330287, 330296	330442	
	III Variant (1H5)	07/93-12/97	ABU, AEA, AEE	55	330322, 330337, 330341, 330342	330440	330123, 330280, 330282, 330287, 330296, 330646	330442	
	III (1H1)	07/95-08/97	AEK, AFT, AKS	74	330337, 330341, 330342	330440	330123, 330164, 330280, 330282, 330287	330744	
	III Cabriolet (1E7)	10/94-05/98	AEK, AFT, AKS	74	330337, 330342	330440	330123, 330280, 330282, 330287	330744	

OPS Oil Pressure Switches **BLS** Brake Light Switches **TT-RF** Temperature Transmitter and Radiator Fan Switches **RLS** Reverse Light Switches **VAR** Various

ERA S.p.A. Moncalieri (TO) Italy - tel: +39 011 6891511 - fax: +39 011 6472862 - www.eranet.it

Vehicle		Date	Engine	kW	OPS	BLS	TT-RF	RLS	VAR
1.6	III Variant (1H5)	07/94-04/99	AEK, AFT, AKS	74	330337, 330341, 330342	330440	330123, 330164, 330280, 330282, 330287	330744	
	IV (1J1)	08/97-02/00	AEH, AKL, APF	74	330322, 330324	330440, 330706, 330710, 330725	330141, 330161, 330199, 330230, 330280, 330282, 330496, 330497, 330546	330261, 330264, 330544, 330579, 330744	
	IV Cabriolet (1E7)	06/98-06/02	AFT, AKS	74	330318, 330326, 330337, 330342	330440, 330545	330123, 330280, 330282	330261, 330264, 330744	
	IV Variant (1J5)	05/99-02/00	AEH, AKL, APF	74	330322, 330324	330440, 330706, 330710, 330725	330141, 330161, 330199, 330230, 330280, 330282, 330496, 330497, 330546	330261, 330264, 330544, 330579, 330744	
	IV (1J1)	08/00-06/05	AVU, BFQ, BJH	75	330324	330440, 330710, 330725	330141, 330161, 330199, 330230, 330280, 330282, 330496, 330497, 330546	330261, 330264, 330544, 330579, 330744	
	IV Variant (1J5)	08/00-06/06	AVU, BFQ	75	330324	330440, 330710, 330725	330141, 330161, 330199, 330230, 330280, 330282, 330496, 330497, 330546	330261, 330264, 330544, 330579, 330744	
	PLUS (5M1, 521)	05/05-	BSE, BSF	75	330324	330503, 330545	330230, 330546	330264, 330579	
	V (1K1)	01/04-	BGU, BSE, BSF	75	330324	330503, 330545	330141, 330230, 330546	330264, 330579	
	V Variant (1K5)	06/07-	BSE	75	330324		330230, 330546	330264, 330579	
	VI (5K1)	10/08-	BSE, BSF, CCSA	75	330324		330230, 330546	330264, 330579	
	VI Variant (AJ5)	07/09-	BSE, BSF, CCSA	75				330579	
	I Cabriolet (155)	08/79-07/82	EG	81		330414		330448	
1.6 16V	IV (1J1)	02/00-06/05	ATN, AUS, AZD, BCB	77	330320, 330324	330440, 330710, 330725	330141, 330161, 330199, 330230, 330280, 330282, 330496, 330497	330261, 330264, 330544, 330579, 330744	
	IV Variant (1J5)	02/00-06/06	ATN, AUS, AZD, BCB	77	330320, 330324	330440, 330710, 330725	330141, 330161, 330199, 330230, 330280, 330282, 330496, 330497	330261, 330264, 330544, 330579, 330744	
1.6 D	I (17)	08/80-07/83	CR, JK	40	330368	330414		330448	
	II (19E, 1G1)	08/83-10/91	JP, ME	40	330322, 330323, 330337, 330341, 330342	330045, 330440	330103, 330114, 330161, 330162, 330164, 330284, 330285, 330296	330233, 330448	
1.6 FSI	IV (1J1)	01/02-06/05	BAD	81	330320	330710, 330725	330141, 330199, 330230, 330546	330264, 330544, 330579	
	IV Variant (1J5)	01/02-06/06	BAD	81	330320	330710, 330725	330141, 330199, 330230, 330546	330264, 330544, 330579	
1.6 FSi	IV Variant (1J5)	10/03-07/04	BAG	85	330320	330503, 330545	330230, 330546	330264, 330579	
1.6 FSI	PLUS (5M1, 521)	01/05-05/08	BLF	85	330320	330503, 330545	330230, 330546	330264, 330579	
	V (1K1)	10/03-	BAG, BLF	85	330320	330503, 330545	330230, 330546	330264, 330579	
1.6 GTI	I (17)	08/76-07/82	EG	81	330368	330414		330448	
1.6 MultiFuel	PLUS (5M1, 521)	11/07-	CCSA, CMXA	75	330324		330230, 330546	330264, 330579	

OPS Oil Pressure Switches **BLS** Brake Light Switches **TT-RF** Temperature Transmitter and Radiator Fan Switches **RLS** Reverse Light Switches **VAR** Various

Vehicle		Date	Engine	kW	OPS	BLS	TT-RF	RLS	VAR
1.6 MultiFuel	V (1K1)	10/07-	CCSA	75				330579	
	V Variant (1K5)	11/07-	CCSA	75				330579	
1.6 TD	II (19E, 1G1)	08/89-10/91	1V	44	330322, 330337, 330341, 330342	330045, 330440	330103, 330162, 330164, 330284, 330296	330442	
	I (17)	03/82-07/83	CY	51	330368	330414		330448	
	II (19E, 1G1)	08/83-10/91	JR, MF	51	330322, 330337, 330341, 330342	330045, 330440	330103, 330114, 330161, 330162, 330164, 330284, 330285, 330296	330233, 330448	
	II (19E, 1G1)	04/89-10/91	RA, SB	59	330322, 330337, 330341, 330342	330045, 330440	330103, 330114, 330161, 330162, 330164, 330284, 330285, 330296	330233, 330442, 330448	
1.8	III (1H1)	11/91-08/97	AAM	55	330337, 330342	330440	330123, 330280, 330282, 330287, 330296	330442	
	III Cabriolet (1E7)	07/93-05/98	AAM	55	330337, 330342	330440	330123, 330161, 330280, 330282, 330287	330442, 330744	
	III Variant (1H5)	07/93-04/99	AAM, ANN	55	330337, 330342	330440	330123, 330280, 330282, 330287, 330296	330442	
	IV Cabriolet (1E7)	06/98-06/02	AAM, ANN	55	330337, 330342	330440, 330545	330123, 330161, 330280, 330282, 330287	330261, 330264, 330442, 330744	
	II (19E, 1G1)	08/86-01/90	RH	62	330337, 330342	330045, 330440	330103, 330114, 330127, 330161, 330162, 330284, 330285, 330286, 330296, 330307	330448	
	I Cabriolet (155)	08/83-09/92	EX	66	330323, 330337, 330342	330045, 330063, 330414, 330440	330103, 330162, 330284, 330286, 330296, 330307	330233, 330442, 330448	
	II (19E, 1G1)	08/84-10/91	GU, GX, HV	66	330322, 330323, 330337, 330341, 330342	330045, 330440	330103, 330114, 330127, 330161, 330162, 330284, 330285, 330286, 330296, 330307, 330308	330233, 330448	
	III (1H1)	11/91-08/97	ABS, ACC, ADZ	66	330337, 330342	330440	330103, 330123, 330163, 330280, 330282, 330287, 330296	330442	
	III Cabriolet (1E7)	07/93-05/98	ABS, ADZ	66	330337, 330342	330440	330103, 330123, 330161, 330163, 330280, 330282, 330287	330442, 330744	
	III Variant (1H5)	07/93-04/99	ABS, ADZ, ANP	66	330337, 330342	330440	330103, 330123, 330163, 330280, 330282, 330287, 330296	330442	
	IV Cabriolet (1E7)	06/98-06/02	ADZ, ANP	66	330337, 330342	330440, 330545	330123, 330161, 330280, 330282, 330287	330261, 330264, 330442, 330744	
	I Cabriolet (155)	08/83-04/93	JH	70	330323, 330337, 330342	330045, 330063, 330414, 330440	330103, 330162, 330284, 330286, 330296, 330308	330233, 330442, 330448	

OPS Oil Pressure Switches **BLS** Brake Light Switches **TT-RF** Temperature Transmitter and Radiator Fan Switches **RLS** Reverse Light Switches **VAR** Various

ERA S.p.A. Moncalieri (TO) Italy - tel: +39 011 6891511 - fax: +39 011 6472862 - www.eranet.it

Vehicle		Date	Engine	kW	OPS	BLS	TT-RF	RLS	VAR
1.8	I Cabriolet (155)	08/89-03/93	2H	72	330323, 330337, 330342	330063, 330414, 330440	330103, 330162, 330284, 330286, 330296	330233, 330442, 330448	
	I Cabriolet (155)	08/82-12/89	DX, EV, PB	82	330322, 330337, 330341, 330342	330045, 330063, 330414, 330440	330103, 330114, 330115, 330127, 330161, 330162, 330284, 330285, 330286, 330296, 330308	330233, 330442, 330448	
	IV (1J1)	08/97-06/05	AGN, BAF	92	330322, 330324	330440, 330706, 330725	330161, 330199, 330230, 330280, 330282, 330287, 330496	330261, 330264, 330544, 330579, 330744	
1.8 4motion	IV (1J1)	05/98-06/05	AGN	92	330322, 330324	330440, 330706, 330725	330161, 330199, 330230, 330280, 330282, 330287, 330496	330261, 330264, 330544, 330579, 330744	
	IV Variant (1J5)	05/99-06/06	AGN	92	330322, 330324	330440, 330706, 330725	330161, 330199, 330230, 330280, 330282, 330287, 330496	330261, 330264, 330544, 330579, 330744	
1.8 Syncro	II (19E, 1G1)	02/86-07/91	GU, GX	66	330337, 330342	330045, 330440	330103, 330114, 330127, 330161, 330162, 330284, 330285, 330286, 330296, 330307, 330308	330448	
	III (1H1)	01/93-08/97	ABS, ADZ	66	330337, 330342	330440	330103, 330123, 330163, 330280, 330282, 330287, 330296	330442	
	III Variant (1H5)	10/94-04/99	ADZ	66	330337, 330342	330440	330103, 330123, 330163, 330280, 330282, 330287, 330296	330442	
	II (19E, 1G1)	08/88-07/91	1P	72	330337, 330342	330045, 330440	330103, 330114, 330115, 330127, 330161, 330162, 330284, 330285, 330286, 330296, 330307		
1.8 GTI	II (19E, 1G1)	08/85-10/87	RD	79	330322, 330337, 330341, 330342	330045, 330440	330114, 330127, 330284, 330285, 330286, 330296, 330308	330233, 330448	
	I (17)	08/82-12/83	DX, JJ	82	330368	330414		330448	
	II (19E, 1G1)	08/83-10/91	DX, EV, GZ, PB	82	330322, 330337, 330341, 330342	330045, 330440	330103, 330114, 330115, 330127, 330161, 330162, 330284, 330285, 330286, 330296, 330308	330233, 330448	
1.8 GTI 16V	II (19E, 1G1)	02/86-10/91	PL	95	330322, 330337, 330341, 330342	330045, 330440	330103, 330114, 330115, 330127, 330161, 330162, 330280, 330282, 330285, 330286, 330296, 330308	330233, 330442, 330448	

VW

OPS Oil Pressure Switches **BLS** Brake Light Switches **TT-RF** Temperature Transmitter and Radiator Fan Switches **RLS** Reverse Light Switches **VAR** Various

Vehicle		Date	Engine	kW	OPS	BLS	TT-RF	RLS	VAR
1.8 GTI 16V	II (19E, 1G1)	02/86-06/90	KR	102	330322, 330337, 330341, 330342	330045, 330440	330103, 330114, 330115, 330127, 330161, 330162, 330284, 330285, 330286, 330296, 330308	330233, 330448	
1.8 GTI CAT	II (19E, 1G1)	01/87-10/91	PF	79	330322, 330323, 330337, 330341, 330342	330045, 330440	330103, 330114, 330115, 330127, 330161, 330162, 330285, 330286, 330296, 330308	330233, 330448	
1.8 GTI G60	II (19E, 1G1)	04/90-07/91	PG	118	330322, 330337, 330341, 330342	330045, 330440	330103, 330115, 330127, 330161, 330162, 330286, 330296	330744	
1.8 GTI G60 Syncro	II (19E, 1G1)	08/88-07/91	1H, PG	118	330322	330045, 330440	330103, 330114, 330127, 330161, 330162, 330284, 330286, 330296	330744	
1.8 i CAT	II (19E, 1G1)	08/87-10/91	GX, RP	66	330322, 330323, 330337, 330341, 330342	330045, 330440	330103, 330114, 330115, 330127, 330161, 330162, 330284, 330285, 330286, 330296, 330308	330233, 330448	
1.8 i Syncro CAT	II (19E, 1G1)	08/87-10/91	RP	66	330322, 330323, 330337, 330341, 330342	330045, 330440	330103, 330114, 330115, 330127, 330161, 330162, 330285, 330286, 330296, 330308	330233	
1.8 T	IV (1J1)	08/97-06/05	AGU, ARZ, AUM	110	330322, 330324	330440, 330706, 330710, 330725	330141, 330161, 330199, 330230, 330280, 330282, 330496, 330497	330261, 330264, 330544, 330579, 330744	
	IV Variant (1J5)	05/00-06/06	AGU, AUM	110	330322, 330324	330440, 330706, 330710, 330725	330141, 330161, 330199, 330230, 330280, 330282, 330497	330261, 330264, 330544, 330579, 330744	
1.8 T GTI	IV (1J1)	08/01-06/05	AUQ	132	330324	330710, 330725	330141, 330161, 330199, 330230	330264, 330544, 330579	
1.9 D	III (1H1)	11/91-08/97	1Y	48	330341, 330342	330440	330123, 330128, 330163, 330164, 330280, 330282, 330296	330442	
	III Variant (1H5)	07/93-04/99	1Y	48	330341, 330342	330440	330123, 330128, 330163, 330164, 330280, 330282, 330296	330442	
1.9 SDI	III (1H1)	07/95-08/97	AEY	47	330341, 330342	330440, 330705, 330706	330123, 330280, 330282, 330286, 330287	330744	
	III Variant (1H5)	07/95-04/99	AEY	47	330341, 330342	330440, 330705, 330706	330123, 330280, 330282, 330286, 330287	330744	
	IV (1J1)	08/97-06/05	AGP, AQM	50	330325, 330341	330440, 330706, 330710, 330725	330141, 330161, 330199, 330230, 330280, 330282, 330496, 330497	330261, 330264, 330544, 330579, 330744	

OPS Oil Pressure Switches **BLS** Brake Light Switches **TT-RF** Temperature Transmitter and Radiator Fan Switches **RLS** Reverse Light Switches **VAR** Various

ERA S.p.A. Moncalieri (TO) Italy - tel: +39 011 6891511 - fax: +39 011 6472862 - www.eranet.it

Vehicle		Date	Engine	kW	OPS	BLS	TT-RF	RLS	VAR
1.9 SDI	IV Variant (1J5)	05/99-06/06	AGP, AQM	50	330325, 330341	330440, 330706, 330710, 330725	330141, 330161, 330199, 330230, 330280, 330282, 330496, 330497	330261, 330264, 330544, 330579, 330744	
1.9 TD	III Variant (1H5)	07/93-04/99	AAZ	55	330341, 330342	330440	330123, 330128, 330163, 330164, 330280, 330282, 330296	330442	
1.9 TD,GTD	III (1H1)	11/91-08/97	AAZ	55	330341, 330342	330440	330123, 330128, 330163, 330164, 330280, 330282, 330296	330442	
1.9 TDI	III (1H1)	09/93-08/97	1Z, AHU, ALE	66	330341, 330342	330440	330116, 330123, 330161, 330163, 330164, 330280, 330282, 330287, 330296	330744	
	III Cabriolet (1E7)	08/95-05/98	1Z, AHU	66	330341, 330342	330440, 330705, 330706	330123, 330161, 330163, 330164, 330280, 330282, 330287	330744	
	III Variant (1H5)	03/94-04/99	1Z, AHU, ALE	66	330341, 330342	330440	330116, 330123, 330161, 330163, 330164, 330280, 330282, 330287, 330296	330744	
	IV (1J1)	10/97-05/04	AGR, ALH	66	330325, 330341	330440, 330706, 330710, 330725	330123, 330141, 330161, 330199, 330230, 330280, 330282, 330287, 330496, 330497	330261, 330264, 330544, 330579, 330744	
	IV Cabriolet (1E7)	06/98-06/02	AHU, ALE	66	330318, 330321, 330326, 330341, 330342	330440, 330545, 330706	330123, 330161, 330163, 330164, 330280, 330282, 330287	330261, 330264, 330744	
	IV Variant (1J5)	05/99-05/06	AGR, ALH	66	330325, 330341	330440, 330706, 330710, 330725	330123, 330141, 330161, 330199, 330230, 330280, 330282, 330287, 330496, 330497	330261, 330264, 330544, 330579, 330744	
	PLUS (5M1, 521)	05/05-12/08	BRU, BXF	66	330325	330503, 330545	330546	330264, 330579	
	V (1K1)	05/04-	BRU, BXF	66	330325	330503, 330545	330546	330264, 330579	
	IV (1J1)	09/00-06/05	ATD, AXR	74	330325	330440, 330710, 330725	330141, 330199, 330230, 330496	330261, 330264, 330544, 330579, 330744	
	IV Variant (1J5)	09/00-06/06	ATD, AXR	74	330325	330440, 330710, 330725	330141, 330199, 330230	330261, 330264, 330544, 330579, 330744	
	PLUS (5M1, 521)	01/05-01/09	BKC, BLS, BXE	77	330325	330503, 330545	330546	330264, 330579	
	V (1K1)	10/03-	BKC, BLS, BXE	77	330325	330503, 330545	330546	330264, 330579	
	V Variant (1K5)	06/07-	BKC	77	330325	330503, 330545	330546	330264, 330579	
	III (1H1)	04/96-08/97	AFN	81	330341, 330342	330440	330123, 330164, 330280, 330282, 330287	330744	
	III Cabriolet (1E7)	07/96-05/98	AFN	81	330341, 330342	330440, 330705, 330706	330123, 330161, 330164, 330280, 330282, 330287	330744	

OPS Oil Pressure Switches **BLS** Brake Light Switches **TT-RF** Temperature Transmitter and Radiator Fan Switches **RLS** Reverse Light Switches **VAR** Various

Vehicle		Date	Engine	kW	OPS	BLS	TT-RF	RLS	VAR
1.9 TDI	III Variant (1H5)	04/96-04/99	AFN	81	330341, 330342	330440	330123, 330164, 330280, 330282, 330287	330744	
	IV (1J1)	08/97-05/04	AHF, ASV	81	330325, 330341	330440, 330706, 330710, 330725	330141, 330161, 330164, 330199, 330230, 330280, 330282, 330496, 330497	330261, 330264, 330544, 330579, 330744	
	IV Cabriolet (1E7)	06/98-06/02	AFN, AVG	81	330318, 330321, 330341, 330342	330440, 330545, 330706	330123, 330161, 330164, 330280, 330282	330261, 330264, 330744	
	IV Variant (1J5)	05/99-06/01	AHF, ASV	81	330325, 330341	330440, 330706, 330710, 330725	330141, 330161, 330164, 330199, 330230, 330280, 330282, 330496, 330497	330261, 330264, 330544, 330579, 330744	
	IV (1J1)	12/98-06/01	AJM, AUY	85	330321, 330325	330440, 330706, 330710, 330725	330141, 330161, 330199, 330230, 330280, 330282, 330496, 330497	330261, 330264, 330544, 330579, 330744	
	IV Variant (1J5)	08/99-06/01	AJM, AUY	85	330321, 330325	330440, 330706, 330710, 330725	330141, 330161, 330199, 330230, 330280, 330282, 330496, 330497	330261, 330264, 330544, 330579, 330744	
	IV (1J1)	11/00-06/05	ASZ	96	330325	330440, 330706, 330710, 330725	330141, 330161, 330199, 330230, 330280, 330282, 330496, 330497	330261, 330264, 330544, 330579, 330744	
	IV Variant (1J5)	11/00-06/06	ASZ	96	330325	330440, 330706, 330710, 330725	330141, 330161, 330199, 330230, 330280, 330282, 330496, 330497	330261, 330264, 330544, 330579, 330744	
	IV (1J1)	05/00-06/05	ARL	110	330325	330440, 330706, 330710, 330725	330141, 330161, 330199, 330230, 330280, 330282, 330496, 330497	330261, 330264, 330544, 330579, 330744	
1.9 TDI 4motion	IV (1J1)	07/98-04/02	AGR, ALH	66	330325, 330341	330440, 330706, 330710, 330725	330123, 330141, 330161, 330199, 330230, 330280, 330282, 330287, 330496, 330497	330261, 330264, 330544, 330579, 330744	
	IV Variant (1J5)	05/99-04/02	AGR, ALH	66	330325, 330341	330440, 330706, 330710, 330725	330123, 330141, 330161, 330199, 330230, 330280, 330282, 330287, 330496, 330497	330261, 330264, 330544, 330579, 330744	
	IV (1J1)	09/00-06/05	ATD	74	330325	330440, 330710, 330725	330141, 330199, 330230, 330496	330264, 330544, 330579	
	IV Variant (1J5)	09/00-06/06	ATD	74	330325	330440, 330710, 330725	330141, 330199, 330230	330264, 330544, 330579	
	V (1K1)	08/04-	BKC, BLS, BXE	77	330325	330503, 330545	330546	330264, 330579	
	V Variant (1K5)	01/08-	BLS	77	330325		330546	330264, 330579	
	IV (1J1)	09/99-06/01	AJM, AUY	85	330321, 330325	330440, 330706, 330710, 330725	330141, 330161, 330199, 330230, 330280, 330282, 330496, 330497	330261, 330264, 330544, 330579, 330744	

OPS Oil Pressure Switches **BLS** Brake Light Switches **TT-RF** Temperature Transmitter and Radiator Fan Switches **RLS** Reverse Light Switches **VAR** Various

ERA S.p.A. Moncalieri (TO) Italy - tel: +39 011 6891511 - fax: +39 011 6472862 - www.eranet.it

Vehicle		Date	Engine	kW	OPS	BLS	TT-RF	RLS	VAR
1.9 TDI 4motion	IV Variant (1J5)	05/99-06/01	AJM	85	330321, 330325	330440, 330706, 330710, 330725	330141, 330161, 330199, 330230, 330280, 330282, 330497	330261, 330264, 330544, 330579, 330744	
	IV (1J1)	11/00-06/05	ASZ	96	330325	330440, 330706, 330710, 330725	330141, 330161, 330199, 330230, 330280, 330282, 330496, 330497	330261, 330264, 330544, 330579, 330744	
	IV Variant (1J5)	11/00-06/06	ASZ	96	330325	330440, 330706, 330710, 330725	330141, 330161, 330199, 330230, 330280, 330282, 330496, 330497	330261, 330264, 330544, 330579, 330744	
	IV (1J1)	02/00-06/05	ARL	110	330325	330440, 330706, 330710, 330725	330141, 330161, 330199, 330230, 330280, 330282, 330497	330261, 330264, 330544, 330579, 330744	
1.9 TDi GTi	IV Variant (1J5)	06/01-06/06	ARL	110	330325	330440, 330706, 330710, 330725	330141, 330161, 330199, 330230, 330280, 330282, 330497	330261, 330264, 330544, 330579, 330744	
1.9 TDI Syncro	III (1H1)	08/95-08/97	1Z, AHU, ALE	66	330341, 330342	330440	330123, 330161, 330163, 330164, 330280, 330282, 330287, 330296	330744	
	III Variant (1H5)	07/95-04/99	1Z, AHU	66	330341, 330342	330440	330123, 330164, 330280, 330282, 330287, 330296	330744	
2.0	III Variant (1H5)	08/95-04/96	AEP	79	330337, 330342	330440	330123, 330280, 330282, 330287	330442	
	III (1H1)	11/91-08/97	2E, ABA, ADY, AGG	85	330337, 330342, 330370	330440	330103, 330123, 330163, 330280, 330282, 330287, 330296	330442	
	III Cabriolet (1E7)	07/93-05/98	2E, ADY, AGG, AKR	85	330337, 330342, 330370	330440	330103, 330123, 330161, 330163, 330280, 330282, 330287	330442, 330744	
	III Variant (1H5)	07/93-04/99	2E, ADY, AGG, AKR	85	330337, 330342, 330370	330440	330103, 330123, 330163, 330280, 330282, 330287, 330296	330442	
	IV (1J1)	07/98-06/05	APK, AQY, AZG, AZJ	85	330324	330440, 330706, 330710, 330725	330141, 330161, 330199, 330230, 330280, 330282, 330496, 330497	330261, 330264, 330544, 330579, 330744	
	IV Cabriolet (1E7)	06/98-06/02	AGG, AKR, ATU, AWF, AWG	85	330318, 330326, 330337, 330342	330440, 330545	330123, 330141, 330161, 330163, 330280, 330282, 330287	330261, 330264, 330442, 330744	
	IV Variant (1J5)	05/99-06/06	APK, AQY, AZJ	85	330324	330440, 330706, 330710, 330725	330141, 330161, 330199, 330230, 330280, 330282, 330496, 330497	330261, 330264, 330544, 330579, 330744	
	V (1K1)	08/06-	BHY	85	330324		330546	330264, 330579	
	V Variant (1K5)	06/07-	BWA	147			330546	330264, 330579	
2.0 4motion	IV (1J1)	10/00-06/05	AZH, AZJ	85	330324	330440, 330710, 330725	330141, 330161, 330199, 330230, 330280, 330282, 330496, 330497	330261, 330264, 330544, 330579, 330744	

OPS Oil Pressure Switches **BLS** Brake Light Switches **TT-RF** Temperature Transmitter and Radiator Fan Switches **RLS** Reverse Light Switches **VAR** Various

Vehicle		Date	Engine	kW	OPS	BLS	TT-RF	RLS	VAR
2.0 4motion	IV Variant (1J5)	10/00-06/06	AZH, AZJ	85	330324	330440, 330710, 330725	330141, 330161, 330199, 330230, 330280, 330282, 330496, 330497	330261, 330264, 330544, 330579, 330744	
2.0 Syncro	III (1H1)	08/95-08/97	AGG	85	330337, 330342, 330370	330440	330123, 330163, 330280, 330282, 330287, 330296	330442	
	III Variant (1H5)	08/95-04/99	AGG	85	330337, 330342, 330370	330440	330123, 330163, 330280, 330282, 330287, 330296	330442	
2.0 Bi-Fuel	IV Variant (1J5)	02/02-06/06	BEH	85	330324	330710, 330725	330141, 330199, 330230	330264, 330544, 330579	
2.0 FSI	PLUS (5M1, 521)	05/05-06/08	BLR, BLY, BVY, BVZ	110		330503, 330545	330546	330264, 330579	
	V (1K1)	01/04-	AXW, BLR, BLX, BLY, BVX, BVY, BVZ	110		330503, 330545	330546	330264, 330579	
2.0 FSI 4motion	V (1K1)	08/04-	BLX, BLY, BVX, BVY, BVZ	110		330503, 330545	330546	330264, 330579	
2.0 GL	III (1H1)	08/95-09/97	AEP	79	330337, 330342	330440	330123, 330280, 330282, 330287	330442	
2.0 GTI	V (1K1)	10/04-	AXX, BPY, BWA	147		330503, 330545	330546	330264, 330579	
	V (1K1)	09/06-	BYD	169		330503, 330545	330546	330264, 330579	
2.0 GTI 16V	III (1H1)	08/92-08/97	ABF	110	330337, 330342	330440	330115, 330123, 330127, 330161, 330280, 330282, 330284, 330296	330744	
2.0 R 4motion	VI (5K1)	11/09-	CDLF	199				330579	
2.0 SDI	V (1K1)	01/04-	BDK	55	330325	330503, 330545	330230, 330546	330264, 330579	
2.0 TDI	PLUS (5M1, 521)	05/05-05/07	BEE	96				330579	
	PLUS (5M1, 521)	05/05-	AZV	100	330325	330503, 330545	330546	330264, 330579	
	V (1K1)	10/03-	AZV	100	330325	330503, 330545	330546	330264, 330579	
	V Variant (1K5)	06/07-	AZV	100	330325		330546	330264, 330579	
	VI (5K1)	10/08-	CBAA, CFFA	100				330579	
	PLUS (5M1, 521)	12/05-05/09	BMM	103	330325	330503, 330545	330546	330264, 330579	
	V (1K1)	12/04-	BMM	103	330325	330503, 330545	330546	330264, 330579	
	V Variant (1K5)	06/07-	BMM	103			330546	330264, 330579	
	VI (5K1)	10/08-	CBAB, CFFB, CJAA	103				330579	
	V (1K1)	11/05-	BMN	125	330325	330503, 330545	330546	330264, 330579	
	VI (5K1)	04/09-	CBBB, CFGB	125				330579	
2.0 TDI 4motion	V (1K1)	08/04-	BMM	103	330325	330503, 330545	330546	330264, 330579	
2.0 TDI 16V	PLUS (5M1, 521)	01/05-	BKD	103	330325	330503, 330545	330546	330264, 330579	
	V (1K1)	10/03-	BKD	103	330325	330503, 330545	330546	330264, 330579	
	V Variant (1K5)	06/07-	BKD	103	330325		330546	330264, 330579	
	VI Variant (AJ5)	07/09-	CBDB	103				330579	
2.0 TDI 16V 4motion	V (1K1)	08/04-	BKD	103	330325	330503, 330545	330546	330264, 330579	
	V Variant (1K5)	06/07-	AZV	100				330579	
	VI (5K1)	05/09-	CBAB, CFFB	103				330579	

OPS Oil Pressure Switches **BLS** Brake Light Switches **TT-RF** Temperature Transmitter and Radiator Fan Switches **RLS** Reverse Light Switches **VAR** Various

ERA S.p.A. Moncalieri (TO) Italy - tel: +39 011 6891511 - fax: +39 011 6472862 - www.eranet.it

Vehicle		Date	Engine	kW	OPS	BLS	TT-RF	RLS	VAR
2.3 V5	IV (1J1)	08/97-10/00	AGZ	110	330321, 330324	330440, 330706, 330725	330123, 330141, 330161, 330199, 330230, 330280, 330282, 330496, 330497	330261, 330264, 330544, 330579, 330744	
	IV Variant (1J5)	05/99-06/06	AGZ	110	330321, 330324	330440, 330706, 330725	330123, 330141, 330161, 330199, 330230, 330280, 330282, 330496, 330497	330261, 330264, 330544, 330579, 330744	
	IV (1J1)	10/00-06/05	AQN	125	330324	330440, 330710, 330725	330123, 330141, 330161, 330199, 330230, 330280, 330282, 330497	330261, 330264, 330544, 330579, 330744	
	IV Variant (1J5)	10/00-06/06	AQN	125	330324	330440, 330710, 330725	330123, 330141, 330161, 330199, 330230, 330280, 330282, 330497	330261, 330264, 330544, 330579, 330744	
2.3 V5 4motion	IV (1J1)	12/98-10/00	AGZ	110	330321, 330324	330440, 330706, 330725	330123, 330141, 330161, 330199, 330230, 330280, 330282, 330496, 330497	330261, 330264, 330544, 330579, 330744	
	IV Variant (1J5)	05/99-06/06	AGZ	110	330321, 330324	330440, 330706, 330725	330123, 330141, 330161, 330199, 330230, 330280, 330282, 330496, 330497	330261, 330264, 330544, 330579, 330744	
	IV (1J1)	10/00-06/05	AQN	125	330324	330440, 330710, 330725	330123, 330141, 330161, 330199, 330230, 330280, 330282, 330497	330261, 330264, 330544, 330579, 330744	
	IV Variant (1J5)	10/00-06/06	AQN	125	330324	330440, 330710, 330725	330123, 330141, 330161, 330199, 330230, 330280, 330282, 330497	330261, 330264, 330544, 330579, 330744	
2.8 V6 4motion	IV (1J1)	03/99-06/05	AQP, AUE, BDE	150	330318, 330324	330440, 330710, 330725	330123, 330141, 330161, 330199, 330230, 330280, 330282, 330496, 330497	330261, 330264, 330544, 330579, 330744	
	IV Variant (1J5)	05/99-06/06	AQP, AUE, BDE	150	330318, 330324	330440, 330710, 330725	330123, 330141, 330161, 330199, 330230, 330280, 330282, 330496, 330497	330261, 330264, 330544, 330579, 330744	
2.8 VR6	III (1H1)	08/95-09/97	AAA	120	330322, 330342	330440	330123, 330152, 330163, 330164, 330280, 330282, 330286, 330296	330744	
	III (1H1)	01/92-08/97	AAA	128	330322, 330342	330440	330123, 330152, 330163, 330164, 330280, 330282, 330286, 330296	330744	
2.9 VR6	III Variant (1H5)	10/94-04/99	ABV	140	330322, 330342	330440	330123, 330152, 330163, 330164, 330280, 330282, 330286, 330296	330744	

Vehicle		Date	Engine	kW	OPS	BLS	TT-RF	RLS	VAR
2.9 VR6 Syncro	III (1H1)	10/94-08/97	ABV	140	330322, 330342	330440	330123, 330152, 330163, 330164, 330280, 330282, 330286, 330296	330744	
	III Variant (1H5)	10/94-04/99	ABV	140	330322, 330342	330440	330123, 330152, 330163, 330164, 330280, 330282, 330286, 330296	330744	
3.2	V (1K1)	09/05-	BUB	184				330579	
3.2 Fsi	PLUS (5M1, 521)	09/05-	BUB	184	330321	330503, 330545	330546	330264	
3.2 R32 4motion	IV (1J1)	09/02-06/05	BFH	177	330324	330710, 330725	330141, 330199, 330230	330264, 330544, 330579	
	V (1K1)	11/05-	BUB	184	330321	330503, 330545	330546	330264, 330579	
JETTA			**08/78 - 10/10**						
1.1	I (16)	08/78-02/84	FA, GG	37		330414		330448	
1.3	II (19E, 1G2)	01/84-06/87	HK, MH	40	330322, 330337, 330341, 330342	330045, 330440	330103, 330114, 330161, 330162, 330284, 330285, 330296, 330307	330233, 330234, 330448	
	II (19E, 1G2)	01/84-10/86	GT	43	330322, 330337, 330342	330045, 330440	330284, 330296, 330307	330233, 330234, 330448	
	I (16)	08/79-02/84	GF	44		330414		330448	
1.3 CAT	II (19E, 1G2)	06/87-12/91	2G, MH, NZ	40	330322, 330337, 330341, 330342	330045, 330440	330103, 330114, 330115, 330127, 330161, 330162, 330285, 330286, 330296, 330307, 330308	330233, 330234, 330448	
1.4 TSI	III (1K2)	05/07-10/10	CAXA	90	330320		330546	330264, 330579	
	III (1K2)	07/06-10/10	BMY	103	330320	330503, 330545	330546	330264, 330579	
	III (1K2)	07/08-10/10	CAVD	118				330579	
	III (1K2)	07/06-10/10	BLG	125	330320	330503, 330545	330546	330264, 330579	
1.5	I (16)	08/78-02/84	JB	51		330414		330448	
1.5 D	I (16)	08/78-07/80	CK	37		330414		330448	
1.6	II (19E, 1G2)	10/86-10/91	PN	51	330322, 330337, 330341, 330342	330045, 330440	330103, 330114, 330127, 330161, 330162, 330285, 330286, 330296, 330307	330233, 330448	
	II (19E, 1G2)	03/86-10/91	RF	53	330322, 330323, 330337, 330341, 330342	330045, 330440	330103, 330114, 330127, 330161, 330162, 330286, 330296	330233, 330448	
	II (19E, 1G2)	01/84-07/92	ABN, EZ, HM	55	330322, 330323, 330337, 330341, 330342	330045, 330440	330103, 330114, 330127, 330161, 330162, 330284, 330285, 330286, 330296, 330307	330233, 330442, 330448	
	I (16)	08/78-02/84	FR	63		330414		330448	
	III (1K2)	10/05-10/10	BSE, BSF	75	330324	330503, 330545	330141, 330230, 330546	330264, 330579	
1.6 D	I (16)	08/80-02/84	CR, JK	40		330414		330448	

OPS Oil Pressure Switches **BLS** Brake Light Switches **TT-RF** Temperature Transmitter and Radiator Fan Switches **RLS** Reverse Light Switches **VAR** Various

ERA S.p.A. Moncalieri (TO) Italy - tel: +39 011 6891511 - fax: +39 011 6472862 - www.eranet.it

Vehicle		Date	Engine	kW	OPS	BLS	TT-RF	RLS	VAR
1.6 D	II (19E, 1G2)	01/84-10/91	JP, ME	40	330322, 330323, 330337, 330341, 330342	330045, 330440	330103, 330114, 330161, 330162, 330164, 330284, 330285, 330296	330233, 330448	
1.6 FSI	III (1K2)	09/05-10/10	BLF	85	330320	330503, 330545	330546	330264, 330579	
1.6 GLI	I (16)	08/78-07/82	EG	81		330414		330448	
1.6 MultiFuel	III (1K2)	01/08-10/10	CCSA	75				330579	
1.6 TD	II (19E, 1G2)	01/90-10/91	1V	44	330322, 330337, 330341, 330342	330045, 330440	330103, 330162, 330164, 330284, 330296	330442	
	I (16)	03/82-02/84	CY	51		330414		330448	
	II (19E, 1G2)	01/84-10/91	JR, MF	51	330322, 330337, 330341, 330342	330045, 330440	330103, 330114, 330161, 330162, 330164, 330284, 330285, 330296	330233, 330448	
1.6 TD	II (19E, 1G2)	04/89-10/91	RA, SB	59	330322, 330337, 330341, 330342	330045, 330440	330103, 330114, 330161, 330162, 330164, 330284, 330285, 330296	330233, 330442, 330448	
1.8	II (19E, 1G2)	08/86-01/90	RH	62	330337, 330342	330045, 330440	330103, 330114, 330127, 330161, 330162, 330284, 330285, 330286, 330296, 330307	330448	
	II (19E, 1G2)	08/84-10/91	GU, GX, HV	66	330322, 330323, 330337, 330341, 330342	330045, 330440	330103, 330114, 330127, 330161, 330162, 330284, 330285, 330286, 330296, 330307, 330308	330233, 330448	
	II (19E, 1G2)	08/85-10/87	RD	79	330322, 330337, 330341, 330342	330045, 330440	330114, 330127, 330284, 330285, 330286, 330296, 330308	330233, 330448	
	I (16)	08/82-02/84	DX, JJ	82		330414		330448	
	II (19E, 1G2)	01/84-10/91	EV, GZ, PB	82	330322, 330337, 330341, 330342	330045, 330440	330103, 330114, 330115, 330127, 330161, 330162, 330284, 330285, 330286, 330296, 330308	330233, 330448	
1.8 CAT	II (19E, 1G2)	08/87-10/91	GX, RP	66	330322, 330323, 330337, 330341, 330342	330045, 330440	330103, 330114, 330115, 330127, 330161, 330162, 330284, 330285, 330286, 330296, 330308	330233, 330448	
	II (19E, 1G2)	01/87-10/91	PF	79	330322, 330323, 330337, 330341, 330342	330045, 330440	330103, 330114, 330115, 330127, 330161, 330162, 330285, 330286, 330296, 330308	330233, 330448	
1.8 Syncro	II (19E, 1G2)	08/87-12/88	GU	66	330322, 330323, 330337, 330341, 330342	330045, 330440	330103, 330114, 330115, 330127, 330161, 330162, 330285, 330286, 330296, 330308	330233	

OPS Oil Pressure Switches **BLS** Brake Light Switches **TT-RF** Temperature Transmitter and Radiator Fan Switches **RLS** Reverse Light Switches **VAR** Various

Vehicle		Date	Engine	kW	OPS	BLS	TT-RF	RLS	VAR
1.8 16V	II (19E, 1G2)	08/86-10/91	PL	95	330322, 330337, 330341, 330342	330045, 330440	330103, 330114, 330115, 330127, 330161, 330162, 330280, 330282, 330285, 330286, 330296, 330308	330233, 330442, 330448	
	II (19E, 1G2)	06/87-12/89	KR	102	330322, 330337, 330341, 330342	330045, 330440	330103, 330114, 330115, 330127, 330161, 330162, 330284, 330285, 330286, 330296, 330308	330233, 330448	
1.9 TDI	III (1K2)	08/05-10/10	BKC, BLS	77	330325	330503, 330545	330546	330264, 330579	
2.0 FSI	III (1K2)	08/05-10/10	BLR, BLY, BVY, BVZ	110		330503, 330545	330546	330264, 330579	
2.0 TDI	III (1K2)	09/05-10/10	AZV	100	330325	330503, 330545	330546	330264, 330579	
	III (1K2)	10/05-10/10	BMM	103		330503, 330545	330546	330264, 330579	
	III (1K2)	10/06-10/10	BMN	125		330503, 330545	330546	330264, 330579	
2.0 TDI 16V	III (1K2)	08/05-10/10	CBDB	103	330325	330503, 330545	330546	330264, 330579	
2.0 TFSI	III (1K2)	10/05-10/10	BWA, CCZA	147		330503, 330545	330546	330264, 330579	
2.5 FSI	III (1K2)	01/06-10/10	BGP, BTK	110		330503, 330545	330546	330264, 330579	
	III (1K2)	07/08-10/10	CBUA	125			330546	330264, 330579	
KAEFER		**04/49 - 08/03**							
1.2		01/54-07/65	M51	22		330414			
1200 1.2		01/60-12/85	D	25		330414			
1300 1.3		08/65-07/70	E	27		330414			
		01/65-07/70	F	29		330414			
		01/70-01/73	AB	32		330414			
1302 1.2		08/69-08/72	D	25		330414			
1302 1.3		08/70-07/75	AC	29		330414			
		08/70-08/72	AB	32		330414			
1302 1.6		01/70-08/72	AD	37		330414			
1302,1303 1.6	Convertible (15)	07/70-06/79	AD	37		330414			
1303 1.2		07/72-02/76	D	25		330414			
1303 1.3		08/72-07/75	AB, AR	32		330414			
1303 1.6		08/72-12/79	AD	35		330414			
1303 LS,S 1.6		08/72-12/79	AD, AJ, AS	37		330414			
1500 1.5		08/66-11/73	H	32		330414			
1500 1.6		07/70-01/73	AD	37		330414			
LT 28-35		**04/75 - 07/06**							
2.3	II Bus (2DM)	05/96-07/06	AGL	105	330012		330104		
2.4	I Box (281-363)	12/82-07/92	DL	66	330337, 330342	330063	330285		
	I Bus (281-363)	12/82-07/92	DL	66	330337, 330342	330063	330285		
	I Flatbed / Chassis (281-363)	12/82-07/92	DL	66	330337, 330342	330063	330285		

OPS Oil Pressure Switches **BLS** Brake Light Switches **TT-RF** Temperature Transmitter and Radiator Fan Switches **RLS** Reverse Light Switches **VAR** Various

ERA S.p.A. Moncalieri (TO) Italy - tel: +39 011 6891511 - fax: +39 011 6472862 - www.eranet.it

Vehicle		Date	Engine	kW	OPS	BLS	TT-RF	RLS	VAR
2.4 D	I Box (281-363)	07/90-05/96	1S, ACT	51	330322, 330337, 330342	330063	330128, 330151, 330284		
	I Bus (281-363)	08/89-06/96	1S, ACT	51	330322, 330337, 330342	330063	330128, 330151, 330284		
	I Flatbed / Chassis (281-363)	08/90-06/96	1S, ACT	51	330322, 330337, 330342	330063	330128, 330151, 330284		
	I Box (281-363)	01/79-07/92	CP, DW	55	330322, 330337, 330342	330063	330151, 330284		
	I Bus (281-363)	01/79-07/92	CP, DW	55	330322, 330337, 330342	330063	330151, 330284		
	I Flatbed / Chassis (281-363)	12/78-02/91	CP, DW	55	330322, 330337, 330342	330063	330151, 330284		
2.4 i	I Box (281-363)	03/94-06/96	1E	69	330337, 330342	330063	330103, 330284, 330286		
	I Bus (281-363)	08/89-06/96	1E	69	330337, 330342	330063	330103, 330284, 330286		
	I Flatbed / Chassis (281-363)	03/94-06/96	1E	69	330337, 330342	330063	330103, 330284, 330286		
2.4 TD	I Box (281-363)	08/88-08/92	1G	68	330322, 330337, 330342	330063	330284		
	I Bus (281-363)	08/89-08/92	1G	68	330322, 330337, 330342	330063	330284		
	I Flatbed / Chassis (281-363)	08/90-08/92	1G	68	330322, 330337, 330342	330063	330284		
	I Box (281-363)	06/92-05/96	ACL	70	330322, 330337, 330342	330063	330128, 330151, 330284		
	I Bus (281-363)	09/92-06/96	ACL	70	330322, 330337, 330342	330063	330128, 330151, 330284		
	I Flatbed / Chassis (281-363)	08/92-06/96	ACL	70	330322, 330337, 330342	330063	330128, 330151, 330284		
	I Box (281-363)	02/86-08/92	DV	75	330322, 330337, 330342	330063	330284		
	I Bus (281-363)	12/82-07/89	DV	75	330322, 330337, 330342	330063	330284		
	I Flatbed / Chassis (281-363)	12/82-09/93	DV	75	330322, 330337, 330342	330063	330284		
2.4 TD Syncro	I Box (281-363)	08/92-04/96	ACL	70	330322, 330337, 330342	330063	330128, 330151, 330284		
	I Flatbed / Chassis (281-363)	08/92-04/96	ACL	70	330322, 330337, 330342	330063	330128, 330151, 330284		
2.5 SDI	II Bus (2DM)	07/96-07/06	AGX	55	330318, 330342		330161		
2.5 TDI	II Bus (2DM)	05/01-07/06	BBE	61	330318, 330342		330288		
	II Bus (2DM)	05/99-07/06	APA	66	330318, 330342				
	II Bus (2DM)	05/01-07/06	BBF	70	330318, 330342		330288		
	II Bus (2DM)	05/96-08/99	AHD	75	330318, 330342		330161, 330288		
	II Bus (2DM)	05/99-07/06	ANJ, AVR	80	330318, 330342		330288		
2.8 TDi	II Bus (2DM)	05/01-06/06	BCQ	116	330000		330161		
LT 28-46		**04/96 - 07/06**							
2.3	II Box (2DX0AE)	05/96-07/06	AGL	105	330012		330104		
	II Flatbed / Chassis (2DX0FE)	06/96-07/06	AGL	105	330012		330104		
2.5 SDI	II Box (2DX0AE)	09/96-07/06	AGX	55	330318, 330342		330161		

OPS Oil Pressure Switches **BLS** Brake Light Switches **TT-RF** Temperature Transmitter and Radiator Fan Switches **RLS** Reverse Light Switches **VAR** Various

Vehicle		Date	Engine	kW	OPS	BLS	TT-RF	RLS	VAR
2.5 SDI	II Flatbed / Chassis (2DX0FE)	09/96-07/06	AGX	55	330318, 330342		330161		
2.5 TDI	II Box (2DX0AE)	05/01-07/06	BBE	61	330318, 330342		330288		
	II Flatbed / Chassis (2DX0FE)	05/01-07/06	BBE	61	330318, 330342		330288		
	II Box (2DX0AE)	05/99-07/06	APA	66	330318, 330342				
	II Flatbed / Chassis (2DX0FE)	05/99-07/06	APA	66	330318, 330342				
	II Box (2DX0AE)	05/01-07/06	BBF	70	330318, 330342		330288		
	II Flatbed / Chassis (2DX0FE)	05/01-07/06	BBF	70	330318, 330342		330288		
	II Box (2DX0AE)	05/96-08/99	AHD	75	330318, 330342		330161, 330288		
	II Flatbed / Chassis (2DX0FE)	06/96-08/99	AHD	75	330318, 330342		330161, 330288		
	II Box (2DX0AE)	05/99-07/06	ANJ, AVR	80	330318, 330342		330288		
	II Flatbed / Chassis (2DX0FE)	05/99-07/06	ANJ, AVR	80	330318, 330342		330288		
2.8 TDI	II Box (2DX0AE)	06/97-12/98	AGK	92	330000		330161		
	II Flatbed / Chassis (2DX0FE)	06/97-12/98	AGK	92	330000		330161		
	II Box (2DX0AE)	01/99-07/06	ATA	96	330000		330161		
	II Flatbed / Chassis (2DX0FE)	01/99-07/06	ATA	96	330000		330161		
	II Box (2DX0AE)	04/02-07/06	AUH	116	330000		330161		
	II Flatbed / Chassis (2DX0FE)	04/02-07/06	AUH	116	330000		330161		
LT 40-55		**04/75 - 06/96**							
2.4	I Box (291-512)	12/82-07/92	DL	66	330337, 330342	330063	330285		
2.4 4WD	I Box (291-512)	12/82-07/92	DL	66	330337, 330342	330063	330285		
2.4 D	I Box (291-512)	07/90-05/96	1S, ACT	51	330322, 330337, 330342	330063	330128, 330151, 330284		
	I Flatbed / Chassis (293-909)	08/90-06/96	1S, ACT	51	330322, 330337, 330342	330063	330128, 330151, 330284		
	I Box (291-512)	01/79-07/92	CP, DW	55	330322, 330337, 330342	330063	330151, 330284		
	I Flatbed / Chassis (293-909)	12/78-02/91	CP, DW	55	330322, 330337, 330342	330063	330151, 330284		
2.4 D 4WD	I Box (291-512)	01/79-03/86	DW	55	330322, 330337, 330342	330063	330151, 330284		
2.4 i	I Box (291-512)	01/93-06/96	1E	69	330337, 330342	330063	330103, 330284, 330286		
	I Flatbed / Chassis (293-909)	03/94-06/96	1E	69	330337, 330342	330063	330103, 330284, 330286		
2.4 TD	I Box (291-512)	08/88-08/92	1G	68	330322, 330337, 330342	330063	330284		
	I Box (291-512)	06/92-05/96	ACL	70	330322, 330337, 330342	330063	330128, 330151, 330284		
	I Flatbed / Chassis (293-909)	08/92-06/96	ACL	70	330322, 330337, 330342	330063	330128, 330151, 330284		
	I Box (291-512)	02/86-08/92	DV	75	330322, 330337, 330342	330063	330284		
	I Flatbed / Chassis (293-909)	12/82-09/93	DV	75	330322, 330337, 330342	330063	330284		
2.4 TD 4WD	I Box (291-512)	08/78-07/92	DV	75	330322, 330337, 330342	330063	330284		

OPS Oil Pressure Switches **BLS** Brake Light Switches **TT-RF** Temperature Transmitter and Radiator Fan Switches **RLS** Reverse Light Switches **VAR** Various

ERA S.p.A. Moncalieri (TO) Italy - tel: +39 011 6891511 - fax: +39 011 6472862 - www.eranet.it

Vehicle		Date	Engine	kW	OPS	BLS	TT-RF	RLS	VAR
2.4 TD Syncro	I Box (291-512)	08/92-04/96	ACL	70	330322, 330337, 330342	330063	330128, 330151, 330284		
LUPO		**09/98 - 07/05**							
1.0	(6X1, 6E1)	09/98-07/05	AER, ALD, ALL, ANV, AUC	37	330319, 330320, 330367	330440, 330545	330141, 330161, 330280, 330282, 330287, 330496, 330497	330264, 330265, 330442, 330511, 330579	
1.2 TDI 3L	(6X1, 6E1)	07/99-07/05	ANY, AYZ	45	330325	330545	330141, 330161, 330280, 330282, 330496	330264, 330442, 330579	
1.4	(6X1, 6E1)	10/00-07/05	AUD	44	330320	330440, 330545	330141, 330161, 330280, 330282, 330496	330264, 330442, 330579	
1.4 16V	(6X1, 6E1)	09/98-07/05	AHW, AKQ, APE, AUA, BBY	55	330320	330440, 330545	330141, 330161, 330280, 330282, 330496, 330497	330264, 330442, 330579	
1.4 16V	(6X1, 6E1)	08/99-07/05	AFK, AQQ, AUB	74	330320	330440, 330545	330141, 330161, 330280, 330282, 330496, 330497	330264, 330442, 330579	
1.4 FSI	(6X1, 6E1)	02/01-07/05	ARR	77	330320	330440, 330545	330141, 330161, 330280, 330282, 330496	330264, 330442, 330579	
1.4 TDI	(6X1, 6E1)	01/99-07/05	AMF	55	330325	330545	330141, 330161, 330199, 330496	330264, 330442, 330579	
1.6 GTI	(6X1, 6E1)	09/00-07/05	AVY	92	330320	330440, 330545, 330706	330141, 330161, 330280, 330282, 330496	330264, 330442, 330579	
1.7 SDI	(6X1, 6E1)	09/98-07/05	AKU	44	330325	330545, 330705, 330706, 330725	330161, 330280, 330282, 330287	330264, 330442, 330579	
MULTIVAN		**04/03 -**							
1.9 TDI	V (7HM, 7HN, 7HF, 7EF, 7EM, 7EN)	01/06-11/09	BRR	62	330325	330725	330546	330264, 330544, 330579	
	V (7HM, 7HN, 7HF, 7EF, 7EM, 7EN)	06/06-11/09	BRS	75	330325	330725	330546	330264, 330544, 330579	
	V (7HM, 7HN, 7HF, 7EF, 7EM, 7EN)	04/03-11/09	AXB	77	330325	330725	330546	330264, 330544, 330579	
2.0	V (7HM, 7HN, 7HF, 7EF, 7EM, 7EN)	11/03-	AXA	85	330321	330440, 330725	330497, 330546	330264, 330544, 330579	
2.0 BiTDI	V (7HM, 7HN, 7HF, 7EF, 7EM, 7EN)	09/09-	CFCA	132				330579	
2.0 BiTDI 4motion	V (7HM, 7HN, 7HF, 7EF, 7EM, 7EN)	09/09-	CFCA	132				330579	
2.0 TDI	V (7HM, 7HN, 7HF, 7EF, 7EM, 7EN)	09/09-	CAAA	62		330725			
	V (7HM, 7HN, 7HF, 7EF, 7EM, 7EN)	09/09-	CAAB	75		330725			
	V (7HM, 7HN, 7HF, 7EF, 7EM, 7EN)	09/09-	CAAC	103		330725		330579	
2.0 TDI 4motion	V (7HM, 7HN, 7HF, 7EF, 7EM, 7EN)	09/09-	CAAC	103		330725		330579	
2.5 TDI	V (7HM, 7HN, 7HF, 7EF, 7EM, 7EN)	04/03-11/09	AXD	96	330321	330440, 330725		330264, 330544, 330579	
	V (7HM, 7HN, 7HF, 7EF, 7EM, 7EN)	11/03-11/09	BLJ	120	330321	330725		330264, 330544, 330579	
	V (7HM, 7HN, 7HF, 7EF, 7EM, 7EN)	04/03-11/09	AXE	128	330321	330725		330264, 330544, 330579	
2.5 TDI 4motion	V (7HM, 7HN, 7HF, 7EF, 7EM, 7EN)	07/04-11/09	AXD	96	330321	330440, 330725		330264, 330544, 330579	

OPS Oil Pressure Switches **BLS** Brake Light Switches **TT-RF** Temperature Transmitter and Radiator Fan Switches **RLS** Reverse Light Switches **VAR** Various

Vehicle		Date	Engine	kW	OPS	BLS	TT-RF	RLS	VAR
2.5 TDI 4motion	V (7HM, 7HN, 7HF, 7EF, 7EM, 7EN)	07/04-11/09	AXE	128	330321	330725		330264, 330544, 330579	
3.2 V6	V (7HM, 7HN, 7HF, 7EF, 7EM, 7EN)	02/04-06/04	BDL	170	330321	330725	330546	330264, 330544, 330579	
	V (7HM, 7HN, 7HF, 7EF, 7EM, 7EN)	02/04-11/09	BKK	173	330321	330725	330546	330264, 330544, 330579	
3.2 V6 4motion	V (7HM, 7HN, 7HF, 7EF, 7EM, 7EN)	07/04-11/09	BKK	173	330321	330725	330546	330264, 330544, 330579	
NEW BEETLE		**01/98 -**							
1.4	(9C1, 1C1)	11/01-	BCA	55	330320	330710, 330725	330141, 330230, 330546	330264, 330544, 330579	
	Convertible (1Y7)	01/03-	BCA	55	330320	330710, 330725	330141, 330230, 330546	330264, 330544, 330579	
1.6	(9C1, 1C1)	10/99-09/00	AWH	74	330320, 330324	330440, 330706, 330725	330141, 330161, 330230, 330280, 330497	330264, 330544, 330744	
	(9C1, 1C1)	06/00-	AYD	75	330320, 330324	330440, 330710, 330725	330141, 330161, 330230, 330280, 330546	330264, 330544, 330579, 330744	
	Convertible (1Y7)	01/03-	BFS	75	330324	330710, 330725	330141, 330230, 330546	330264, 330544, 330579	
1.8 T	(9C1, 1C1)	10/99-	APH, AVC, AWU, AWV	110	330320, 330324	330440, 330706, 330710, 330725	330141, 330161, 330163, 330230, 330280, 330497, 330546	330264, 330544, 330579, 330744	
	Convertible (1Y7)	01/03-	AWU	110	330320, 330324	330440, 330710, 330725	330141, 330161, 330163, 330230, 330280, 330497, 330546	330264, 330544, 330579, 330744	
	(9C1, 1C1)	11/01-06/05	AWP	132	330324	330710, 330725	330141, 330230	330264, 330544, 330579, 330744	
1.9 TDI	(9C1, 1C1)	01/98-06/04	ALH	66	330325, 330341	330440, 330710, 330725	330141, 330161, 330164, 330230, 330280, 330496, 330497	330264, 330544, 330579, 330744	
	(9C1, 1C1)	02/01-	ATD	74	330325	330710, 330725	330141, 330230, 330546	330264, 330544, 330579, 330744	
	Convertible (1Y7)	06/03-	AXR	74				330264, 330544, 330579, 330744	
	(9C1, 1C1)	07/05-	BSW	77	330325	330710, 330725	330141, 330230, 330546	330264, 330544	
	Convertible (1Y7)	07/05-	BSW	77	330325	330710, 330725	330141, 330230, 330546	330264, 330544	
2.0	(9C1, 1C1)	01/98-	AEG, APK, AQY, AZG	85	330320, 330324	330440, 330710, 330725	330141, 330161, 330230, 330280, 330496, 330497, 330546	330264, 330544, 330579, 330744	
	Convertible (1Y7)	09/02-	AZJ, BDC, BGD	85	330324	330710, 330725	330141, 330230, 330546	330264, 330544, 330579	
2.3 V5	(9C1, 1C1)	10/00-	AQN	125	330318, 330324	330440, 330710, 330725	330141, 330230, 330280	330264, 330544, 330579, 330744	
2.5	(9C1, 1C1)	07/05-	BPR	110		330710, 330725	330141, 330230, 330546	330264, 330544	
	Convertible (1Y7)	07/05-	BPR	110		330710, 330725	330141, 330230, 330546	330264, 330544	

OPS Oil Pressure Switches **BLS** Brake Light Switches **TT-RF** Temperature Transmitter and Radiator Fan Switches **RLS** Reverse Light Switches **VAR** Various

ERA S.p.A. Moncalieri (TO) Italy - tel: +39 011 6891511 - fax: +39 011 6472862 - www.eranet.it

Vehicle		Date	Engine	kW	OPS	BLS	TT-RF	RLS	VAR
RSI 3.2	(9C1, 1C1)	04/00-05/01	AXJ	165	330318	330440	330230, 330280	330264, 330544, 330744	
PASSAT		**05/73 -**							
1.3	(32)	05/73-07/80	FY	40	330368	330414			
	(32)	05/73-01/78	ZA	40		330414			
	Variant (33)	05/73-07/80	FY	40	330368	330414			
	Variant (33)	05/73-01/78	ZA	40		330414			
	(32)	05/73-01/78	ZF	44	330368	330414			
	(32B)	08/80-07/86	EP, EU	44	330004	330063	330284, 330296	330234	
	Variant (32B)	08/80-07/86	EP, EU	44	330004	330063	330284, 330296	330234	
	Variant (33)	10/73-01/78	ZF	44	330368	330414			
1.4 TSI	(3C2)	05/07-	CAXA	90	330320		330546	330264, 330579	
	Variant (3C5)	05/07-	CAXA	90	330320		330546	330264, 330579	
1.4 TSI EcoFuel	(3C2)	01/09-	CDGA	110				330579	
	Variant (3C5)	01/09-	CDGA	110				330579	
1.5	(32)	07/73-12/75	YJ, ZB	55	330368	330414			
	Variant (33)	10/73-08/75	YJ, ZB	55	330368	330414			
	(32)	05/73-12/75	ZC	63	330368	330414			
	Variant (33)	10/73-12/75	ZC	63	330368	330414			
1.5 D	(32)	08/77-07/80	CK	37	330368	330414			
	Variant (33)	02/77-07/80	CK	37	330368	330414			
1.6	(3A2, 35I)	02/88-09/91	1F, EZ	53	330322, 330337, 330341, 330342, 330368	330045, 330440	330103, 330127, 330162, 330284, 330285, 330286, 330289, 330296, 330307	330744	
	Variant (3A5, 35I)	04/88-09/91	1F, EZ	53	330322, 330337, 330341, 330342, 330368	330045, 330440	330103, 330127, 330162, 330284, 330285, 330286, 330289, 330296, 330307	330744	
	(32B)	08/80-03/88	DT	55	330004, 330322, 330337, 330341	330045, 330063, 330440	330103, 330114, 330268, 330284, 330296, 330687	330234	
	(3A2, 35I)	02/88-12/88	ABN	55	330322, 330337, 330341, 330342, 330368	330045, 330440	330103, 330162, 330289, 330296, 330307	330744	
	Saloon (32B)	01/85-03/88	DT	55	330004, 330322, 330337, 330341	330045, 330440	330103, 330114, 330268, 330284, 330296, 330687	330234	
	Variant (32B)	08/80-03/88	DT	55	330004, 330322, 330337, 330341	330045, 330063, 330440	330103, 330114, 330268, 330284, 330296, 330687	330234	
	Variant (33)	02/76-07/80	YN	55	330368	330414			
	Variant (3A5, 35I)	04/88-12/88	EZ	55	330322, 330337, 330341, 330342, 330368	330045, 330440	330103, 330162, 330289, 330296, 330307	330744	
	(32)	08/75-07/80	YP	63	330368	330414			
	Variant (33)	08/75-07/80	YP	63	330368	330414			

OPS Oil Pressure Switches **BLS** Brake Light Switches **TT-RF** Temperature Transmitter and Radiator Fan Switches **RLS** Reverse Light Switches **VAR** Various

Vehicle		Date	Engine	kW	OPS	BLS	TT-RF	RLS	VAR
1.6	(3A2, 35I)	10/94-08/96	AEK, AFT	74	330337, 330342	330045, 330440	330123, 330161, 330280, 330282, 330287	330744	
	(3B2)	10/96-11/00	ADP, AHL, ANA, ARM	74	330322, 330324	330327, 330328	330141, 330231, 330297, 330496, 330497	330753	
	Variant (3A5, 35I)	07/94-12/95	AEK, AFT	74	330337, 330342	330045, 330440	330123, 330161, 330280, 330282, 330287	330744	
	Variant (3B5)	06/97-11/00	ADP, AHL, ANA, ARM	74	330322, 330324	330327, 330328	330141, 330231, 330297, 330496, 330497	330753	
	(3B3)	11/00-05/05	ALZ	75	330324	330328, 330545, 330725	330141, 330231, 330496	330753	
	(3C2)	05/05-	BSE, BSF	75	330324		330546	330264, 330579	
	Variant (3B6)	11/00-05/05	ALZ	75	330324	330328, 330545, 330725	330141, 330231, 330496	330753	
	Variant (3C5)	08/05-	BSE, BSF	75	330324		330546	330264, 330579	
1.6 D	(32B)	08/80-03/88	CR, JK	40	330004, 330322, 330337, 330341, 330368	330045, 330440	330103, 330114, 330161, 330268, 330284, 330296, 330687	330234	
	Variant (32B)	08/80-03/88	CR, JK	40	330004, 330322, 330337, 330341, 330368	330045, 330440	330103, 330114, 330161, 330268, 330284, 330296, 330687	330234	
	Variant (33)	02/79-07/80	CR	40		330414			
1.6 FSI	(3C2)	03/05-	BLF	85	330320		330546	330264, 330579	
	Variant (3C5)	08/05-	BLF	85	330320		330546	330264, 330579	
1.6 i	Variant (33)	06/78-07/80	YS	81	330368	330414			
1.6 TD	(32B)	04/82-03/88	CY	51	330004, 330322, 330337, 330341	330045, 330440	330103, 330114, 330161, 330268, 330284, 330296, 330687	330234	
	Saloon (32B)	01/85-03/88	CY	51	330004, 330322, 330337, 330341	330045, 330440	330103, 330114, 330161, 330268, 330284, 330296, 330687	330234	
	Variant (32B)	04/82-03/88	CY	51	330004, 330322, 330337, 330341, 330368	330045, 330440	330103, 330114, 330161, 330268, 330284, 330296, 330687	330234	
	(3A2, 35I)	08/88-09/93	RA, SB	59	330004, 330322, 330337, 330341, 330342, 330368	330045, 330440	330103, 330161, 330163, 330164, 330287, 330296	330744	
	Variant (3A5, 35I)	08/88-09/93	RA, SB	59	330004, 330322, 330337, 330341, 330342, 330368	330045, 330440	330103, 330161, 330163, 330164, 330287, 330296	330744	
1.6 TDI	(3C2)	08/09-	CAYC	77				330579	
	Variant (3C5)	08/09-	CAYC	77				330579	
1.8	(3A2, 35I)	08/90-08/96	AAM	55	330322, 330337, 330341, 330342, 330368	330045, 330440	330103, 330123, 330162, 330286, 330287, 330296	330744	

OPS Oil Pressure Switches **BLS** Brake Light Switches **TT-RF** Temperature Transmitter and Radiator Fan Switches **RLS** Reverse Light Switches **VAR** Various

ERA S.p.A. Moncalieri (TO) Italy - tel: +39 011 6891511 - fax: +39 011 6472862 - www.eranet.it

Vehicle		Date	Engine	kW	OPS	BLS	TT-RF	RLS	VAR
1.8	Variant (3A5, 35I)	08/90-05/97	AAM	55	330322, 330337, 330341, 330342, 330368	330045, 330440	330103, 330123, 330162, 330286, 330287, 330296	330744	
	(32B)	01/83-03/88	DS, JN	66	330004, 330322, 330337, 330341	330045, 330440	330103, 330114, 330268, 330284, 330296, 330687	330234	
	(3A2, 35I)	02/88-08/96	ABS, ADZ, RP	66	330322, 330337, 330341, 330342, 330368	330045, 330440	330103, 330123, 330162, 330280, 330282, 330286, 330287, 330296	330744	
	Saloon (32B)	01/85-03/88	DS, JN	66	330004, 330322, 330337, 330341	330045, 330440	330103, 330114, 330268, 330284, 330296, 330687	330234	
	Variant (32B)	01/83-03/88	DS, JN	66	330004, 330322, 330337, 330341	330045, 330440	330103, 330114, 330268, 330284, 330296, 330687	330234	
	Variant (3A5, 35I)	02/88-05/97	ABS, ADZ, RP	66	330322, 330337, 330341, 330342, 330368	330045, 330440	330103, 330123, 330162, 330280, 330282, 330286, 330287, 330296	330744	
	(3A2, 35I)	04/88-07/93	PF	79	330322, 330337, 330341, 330342, 330368	330045, 330440	330103, 330161, 330286, 330296	330744	
	Variant (3A5, 35I)	04/88-07/90	PF	79	330322, 330337, 330341, 330342, 330368	330045, 330440	330103, 330161, 330286, 330296	330744	
	(3A2, 35I)	04/88-07/92	PB	82	330322, 330337, 330341, 330342, 330368	330045, 330440	330103, 330161, 330286, 330296	330744	
	Variant (3A5, 35I)	04/88-07/92	PB	82	330322, 330337, 330341, 330342, 330368	330045, 330440	330103, 330161, 330286, 330296	330744	
	(3B2)	01/97-11/00	AFY	85	330322, 330324	330327, 330328	330141, 330231, 330297, 330497	330753	
	Variant (3B5)	06/97-11/00	AFY	85	330322, 330324	330327, 330328	330141, 330231, 330297, 330497	330753	
	(3B2)	10/96-11/00	ADR, APT, ARG	92	330322, 330324	330327, 330328	330141, 330231, 330297, 330496, 330497, 330687	330753	
	(3B3)	03/03-03/05	APT	92			330687	330753	
	Variant (3B5)	06/97-11/00	ADR, APT, ARG	92	330322, 330324	330327, 330328	330141, 330231, 330297, 330496, 330497, 330687	330753	
	Variant (3A5, 35I)	08/91-09/93	KR	102				330744	
1.8 4motion	(3B3)	03/01-05/05	AWM	125		330725			
	Variant (3B6)	03/01-05/05	AWM	125		330725			
1.8 Syncro	Variant (32B)	01/86-03/88	DS, JN	66	330004, 330322, 330337, 330341	330045, 330440	330103, 330114, 330268, 330284, 330296, 330687	330234	
1.8 Syncro/4motion	(3B2)	10/96-11/00	ADR, APT, ARG	92	330322, 330324	330327, 330328	330141, 330231, 330297, 330496, 330497, 330687	330753	
	Variant (3B5)	06/97-11/00	ADR, APT, ARG	92	330322, 330324	330327, 330328	330141, 330231, 330297, 330496, 330497, 330687	330753	

OPS Oil Pressure Switches **BLS** Brake Light Switches **TT-RF** Temperature Transmitter and Radiator Fan Switches **RLS** Reverse Light Switches **VAR** Various

Vehicle		Date	Engine	kW	OPS	BLS	TT-RF	RLS	VAR
1.8 16V	(3A2, 35I)	04/88-12/89	KR	100	330322, 330337, 330341, 330342, 330368	330045, 330440	330103, 330284, 330296	330744	
	Variant (3A5, 35I)	04/88-12/89	KR	100	330322, 330337, 330341, 330342, 330368	330045, 330440	330103, 330284, 330296	330744	
1.8 G60 Syncro	(3A2, 35I)	08/88-08/96	PG	118	330322, 330337, 330341, 330342, 330368	330045, 330440	330103, 330296	330744	
	Variant (3A5, 35I)	08/88-05/97	PG	118	330322, 330337, 330341, 330342, 330368	330045, 330440	330103, 330296	330744	
1.8 GL	(3A2, 35I)	08/91-09/93	KR	102				330744	
1.8 T	(3B2)	10/96-11/00	AEB, ANB, APU	110	330322, 330324	330327, 330328	330141, 330231, 330297, 330496, 330497	330753	
	Variant (3B5)	06/97-11/00	AEB, ANB, APU	110	330322, 330324	330327, 330328	330141, 330231, 330297, 330496, 330497	330753	
	(3B3)	02/01-05/05	AWM	125	330324	330328, 330545, 330725	330141, 330231		
	Variant (3B6)	05/02-08/05	AWM	125	330324	330328, 330545, 330725	330141, 330231		
1.8 T 20V	(3B3)	11/00-05/05	AWL, AWT	110	330324	330328, 330545, 330725	330141, 330231, 330496	330753	
	Variant (3B6)	11/00-05/05	AWT	110	330324	330328, 330545, 330725	330141, 330231, 330496	330753	
1.8 T Syncro	(3B2)	11/96-08/00	AEB	110	330322, 330324	330327, 330328	330141, 330231, 330297, 330497	330753	
1.8 TSI	(3C2)	11/09-	CDAB, CGYA	112				330579	
	Variant (3C5)	11/09-	CDAB, CGYA	112				330579	
	(3C2)	05/07-	BZB, CDAA	118	330324		330546	330264, 330579	
	Variant (3C5)	05/07-	BZB	118	330324		330546	330264, 330579	
1.9	(32B)	01/81-07/83	WN	85	330004	330063	330284, 330296	330234	
	Variant (32B)	01/81-07/83	WN	85	330004, 330368	330063	330284, 330296	330234	
1.9 D	(3A2, 35I)	05/89-10/93	1Y	50	330322, 330337, 330341, 330342	330045, 330440	330103, 330128, 330161, 330162, 330163, 330287, 330296	330744	
	Variant (3A5, 35I)	05/89-10/93	1Y	50	330322, 330337, 330341, 330342	330045, 330440	330103, 330128, 330161, 330162, 330163, 330287, 330296	330744	
1.9 TD	(3A2, 35I)	03/91-08/96	AAZ	55	330322, 330337, 330341, 330342	330045, 330440	330103, 330123, 330128, 330162, 330163, 330164, 330287, 330296		
	Variant (3A5, 35I)	03/91-05/97	AAZ	55	330322, 330337, 330341, 330342	330045, 330440	330103, 330123, 330128, 330162, 330163, 330164, 330287, 330296		
1.9 TDI	(3A2, 35I)	10/93-08/96	1Z	66	330341, 330342	330045, 330440, 330705, 330706	330123, 330161, 330280, 330282, 330286, 330287	330744	

OPS Oil Pressure Switches **BLS** Brake Light Switches **TT-RF** Temperature Transmitter and Radiator Fan Switches **RLS** Reverse Light Switches **VAR** Various

ERA S.p.A. Moncalieri (TO) Italy - tel: +39 011 6891511 - fax: +39 011 6472862 - www.eranet.it

Vehicle		Date	Engine	kW	OPS	BLS	TT-RF	RLS	VAR
1.9 TDI	(3B2)	10/96-11/00	AHH, AHU	66	330321, 330341	330328	330141, 330231, 330297, 330496, 330497	330753	
	Variant (3A5, 35I)	10/93-05/97	1Z, AHU	66	330341, 330342	330045, 330440, 330705, 330706	330123, 330161, 330280, 330282, 330286, 330287	330744	
	Variant (3B5)	06/97-11/00	AHH, AHU	66	330321, 330341	330328	330141, 330231, 330297, 330496, 330497	330753	
	(3B2)	02/00-11/00	AVB	74	330325	330328, 330725	330141, 330231	330753	
	(3B3)	11/00-05/05	AVB	74	330325	330328, 330545, 330725	330141, 330231, 330496	330753	
	Variant (3B5)	02/00-11/00	AVB	74	330325	330328, 330725	330141, 330231	330753	
	Variant (3B6)	11/00-05/05	AVB	74	330325	330328, 330545, 330725	330141, 330231, 330496	330753	
	(3C2)	03/05-	BKC	77	330325		330546	330264, 330579	
	Variant (3C5)	08/05-	BKC, BLS	77	330325		330546	330264, 330579	
	(3A2, 35I)	03/96-08/96	AFN	81	330341, 330342	330045, 330440, 330705, 330706	330123, 330280, 330282, 330287	330744	
	(3B2)	10/96-11/00	AFN, AVG	81	330321, 330341	330328	330141, 330231, 330297, 330496, 330497	330753	
	Variant (3A5, 35I)	03/96-05/97	AFN	81	330341, 330342	330045, 330440, 330705, 330706	330123, 330280, 330282, 330287	330744	
	Variant (3B5)	06/97-11/00	AFN, AVG	81	330321, 330341	330328	330141, 330231, 330287, 330297, 330496, 330497	330753	
	(3B2)	08/98-11/00	AJM, ATJ	85	330321, 330341	330328	330141, 330231, 330297, 330496, 330497	330753	
	Variant (3B5)	08/98-11/00	AJM, ATJ	85	330321, 330341	330328	330141, 330231, 330297, 330496, 330497	330753	
	(3B3)	11/00-05/05	AVF, AWX	96	330325	330328, 330545, 330725	330141, 330231, 330496	330249, 330748, 330753	
	Variant (3B6)	11/00-05/05	AVF, AWX	96	330325	330328, 330545, 330725	330141, 330231, 330496	330249, 330748, 330753	
1.9 TDI 4motion	(3B2)	08/99-11/00	AJM, ATJ	85	330321, 330341	330328	330141, 330231, 330297, 330496, 330497	330753	
	Variant (3B5)	08/99-11/00	ATJ	85	330321, 330341	330328	330141, 330231, 330297, 330497	330753	
	(3B3)	11/00-05/05	AVF	96	330325	330328, 330545, 330725	330141, 330231, 330496	330249, 330748	
	Variant (3B6)	11/00-05/05	AVF	96	330325	330328, 330545, 330725	330141, 330231, 330496	330249, 330748	
1.9 TDI Syncro/4motion	(3B2)	10/96-11/00	AFN, AVG	81	330321, 330341	330328	330141, 330231, 330297, 330496, 330497	330753	
	Variant (3B5)	06/97-11/00	AFN, AVG	81	330321, 330341	330328	330141, 330231, 330287, 330297, 330496, 330497	330753	
2.0	(3A2, 35I)	03/95-08/96	AEP	79	330337, 330342, 330370	330045, 330440	330103, 330123, 330280, 330282, 330287	330744	

OPS Oil Pressure Switches **BLS** Brake Light Switches **TT-RF** Temperature Transmitter and Radiator Fan Switches **RLS** Reverse Light Switches **VAR** Various

Vehicle		Date	Engine	kW	OPS	BLS	TT-RF	RLS	VAR
2.0	Variant (3A5, 35I)	03/95-08/96	AEP	79	330337, 330342	330045, 330440	330103, 330123, 330280, 330282, 330287	330744	
	(32B)	08/83-03/88	HP, JS	85	330004, 330337	330045, 330440	330159, 330268, 330284, 330296	330234	
	(3A2, 35I)	02/90-08/96	2E, ADY, AGG	85	330004, 330322, 330337, 330341, 330342, 330368, 330370	330045, 330440	330103, 330123, 330161, 330162, 330280, 330282, 330286, 330287, 330296	330744	
	(3B3)	11/00-05/05	AZM, BFF	85	330324	330328, 330545, 330725	330141, 330231, 330496	330753	
	Variant (32B)	08/83-03/88	HP, JS	85	330004, 330337	330045, 330440	330159, 330268, 330284, 330296	330234	
	Variant (3A5, 35I)	02/90-05/97	2E, ADY, AGG	85	330004, 330322, 330337, 330341, 330342, 330368	330045, 330440	330103, 330123, 330161, 330162, 330280, 330282, 330286, 330287, 330296	330744	
	Variant (3A5, 35I)	10/93-10/96	2E	85				330744	
	Variant (3B6)	11/00-05/05	AZM	85	330324	330328, 330545, 330725	330141, 330231, 330496	330753	
	(3B3)	11/01-05/05	ALT	96	330324	330328, 330545, 330725	330141	330753	
	Variant (3B6)	11/01-05/05	ALT	96	330324	330328, 330545, 330725	330141	330753	
2.0 4motion	(3B3)	11/00-05/05	AZM	85	330324	330328, 330545, 330725	330141, 330231, 330496	330753	
	Variant (3B6)	11/00-05/05	AZM	85	330324	330328, 330545, 330725	330141, 330231, 330496	330753	
2.0 Syncro	(3A2, 35I)	10/90-08/96	2E, ADY, AGG	85	330004, 330322, 330337, 330341, 330342, 330368, 330370	330045, 330440	330103, 330123, 330161, 330162, 330280, 330282, 330286, 330287, 330296	330744	
	Variant (32B)	05/84-03/88	JS	85	330004, 330337	330045, 330440	330159, 330268, 330284, 330296	330234	
	Variant (3A5, 35I)	10/90-05/97	2E, ADY, AGG	85	330004, 330322, 330337, 330341, 330342, 330368	330045, 330440	330103, 330123, 330161, 330162, 330280, 330282, 330286, 330287, 330296	330744	
2.0 16V	(3A2, 35I)	08/88-09/93	9A	100	330322, 330337, 330341, 330342, 330368	330045, 330440	330103, 330127, 330162, 330284, 330287, 330296	330744	
	Variant (3A5, 35I)	08/88-09/93	9A	100	330322, 330337, 330341, 330342, 330368	330045, 330440	330103, 330127, 330162, 330284, 330287, 330296	330744	
	(3A2, 35I)	01/94-08/96	ABF	110	330337, 330342	330045, 330440	330123, 330127, 330161, 330280, 330282, 330284	330744	
	Variant (3A5, 35I)	01/94-05/97	ABF	110	330337, 330342	330045, 330440	330123, 330127, 330161, 330280, 330282, 330284	330744	
2.0 BlueTDI	(3C2)	01/09-	CBAC	105				330579	
	Variant (3C5)	01/09-	CBAC	105				330579	
2.0 FSI	(3C2)	03/05-	BLR, BLY	110			330546	330264, 330579	

OPS Oil Pressure Switches **BLS** Brake Light Switches **TT-RF** Temperature Transmitter and Radiator Fan Switches **RLS** Reverse Light Switches **VAR** Various

ERA S.p.A. Moncalieri (TO) Italy - tel: +39 011 6891511 - fax: +39 011 6472862 - www.eranet.it

Vehicle		Date	Engine	kW	OPS	BLS	TT-RF	RLS	VAR
2.0 FSI	Variant (3C5)	08/05-	BLR, BLY	110			330546	330264, 330579	
	(3C2)	08/07-	CCTB	125				330579	
	Variant (3C5)	08/07-	CCTB	125				330579	
	(3C2)	07/05-	AXX, BPY, BWA	147	330324		330546	330264, 330579	
	Variant (3C5)	08/05-	AXX, BPY	147	330324		330546	330264, 330579	
2.0 FSI 4motion	(3C2)	09/05-	BLX, BLY, BVX	110			330546	330264, 330579	
	Variant (3C5)	09/05-	BLX, BLY, BVX	110			330546	330264, 330579	
2.0 TDI	(3C2)	11/08-	CBDC	81				330579	
	Variant (3C5)	11/08-	CBDC	81				330579	
	(3C2)	11/05-	BWV	88				330579	
	(3C2)	08/05-07/06	BVE	90	330325		330546	330264, 330579	
	Variant (3C5)	08/05-	BVE	90	330325		330546	330264, 330579	
	(3B3)	12/03-05/05	BGW	100	330325	330545, 330725	330141, 330231	330748	
	(3C2)	03/05-	BMA, CBAA	100	330325		330546	330264, 330579	
	Variant (3B6)	12/03-05/05	BGW	100	330325	330545, 330725	330141, 330231	330748	
	Variant (3C5)	08/05-	BMA	100	330325		330546	330264, 330579	
	(3C2)	03/05-	BMP	103	330325		330546	330264, 330579	
	Variant (3C5)	08/05-	BMP	103	330325		330546	330264, 330579	
	(3C2)	08/05-	BUZ	120	330325		330546	330264, 330579	
	Variant (3C5)	08/05-	BUZ	120				330579	
	(3C2)	08/05-	BMR	125	330325		330546	330264, 330579	
	Variant (3C5)	08/05-	BMR	125	330325		330546	330264, 330579	
2.0 TDI 4motion	(3C2)	03/05-	BMP	103	330325		330546	330264, 330579	
	Variant (3C5)	08/05-	BMP	103	330325		330546	330264, 330579	
2.0 TDI 16V	(3C2)	03/05-	BKP	103	330325		330546	330264, 330579	
	Variant (3C5)	08/05-	BKP	103	330325		330546	330264, 330579	
2.0 TDI 16V 4motion	(3C2)	03/05-	BKP	103	330325		330546	330264, 330579	
	Variant (3C5)	08/05-	BKP	103	330325		330546	330264, 330579	
2.0 TDI 4motion	(3C2)	05/09-	CBBB	125				330579	
	Variant (3C5)	05/09-	CBBB	125				330579	
2.2	(32B)	08/85-03/88	KX	85	330004, 330337	330045, 330440	330159, 330268, 330284, 330296	330234	
	Saloon (32B)	01/85-03/88	KX	85	330004, 330337	330045, 330440	330159, 330268, 330284, 330296	330234	
	Variant (32B)	08/85-03/88	KX	85	330004, 330337	330045, 330440	330159, 330268, 330284, 330296	330234	
2.3 V5	(3B3)	11/00-05/05	AZX	125	330324	330328, 330545, 330725	330123, 330141, 330231, 330546	330753	
2.3 V5 4motion	(3B3)	11/00-05/05	AZX	125	330324	330328, 330545, 330725	330123, 330141, 330231, 330546	330753	
2.3 VR5	(3B2)	10/96-11/00	AGZ	110	330321, 330322, 330324	330327, 330328	330123, 330141, 330231, 330297, 330496, 330497	330753	
	Variant (3B5)	06/97-11/00	AGZ	110	330321, 330322, 330324	330327, 330328	330123, 330141, 330231, 330297, 330496, 330497	330753	

OPS Oil Pressure Switches **BLS** Brake Light Switches **TT-RF** Temperature Transmitter and Radiator Fan Switches **RLS** Reverse Light Switches **VAR** Various

Vehicle		Date	Engine	kW	OPS	BLS	TT-RF	RLS	VAR
2.3 VR5	Variant (3B6)	11/00-05/05	AZX	125	330324	330328, 330545, 330725	330123, 330141, 330231, 330546	330753	
2.3 VR5 4motion	Variant (3B6)	11/00-05/05	AZX	125	330324	330328, 330545, 330725	330123, 330141, 330231, 330546	330753	
2.3 VR5 Syncro/4motion	(3B2)	10/97-11/00	AGZ	110	330321, 330322, 330324	330327, 330328	330123, 330141, 330231, 330297, 330496, 330497	330753	
	Variant (3B5)	10/97-11/00	AGZ	110	330321, 330322, 330324	330327, 330328	330123, 330141, 330231, 330297, 330496, 330497	330753	
2.5 TDI	(3B2)	07/98-11/00	AFB, AKN	110	330321, 330324, 330341	330328	330141, 330231, 330297, 330496, 330497, 330644, 330687	330249, 330748	
	(3B3)	11/00-05/05	AFB, AKN	110	330321, 330324, 330341	330328, 330545, 330725	330141, 330231, 330297, 330496, 330497, 330644, 330687	330249, 330748	
	Variant (3B5)	07/98-11/00	AFB, AKN	110	330321, 330324, 330341	330328	330141, 330231, 330297, 330496, 330497, 330644, 330687	330249, 330748	
	Variant (3B6)	11/00-05/05	AFB, AKN	110	330321, 330324, 330341	330328, 330545, 330725	330141, 330231, 330297, 330496, 330497, 330644, 330687	330249, 330748	
	(3B3)	05/03-05/05	BDG	120	330321, 330341	330545, 330725	330141, 330644	330249, 330748	
	Variant (3B6)	05/03-05/05	BDG	120	330321, 330341	330545, 330725	330141, 330644	330249, 330748	
2.5 TDI 4motion	(3B3)	11/00-05/05	AFB, AKN	110	330321, 330324, 330341	330328, 330545, 330725	330141, 330231, 330297, 330496, 330497, 330644, 330687	330249, 330748	
	Variant (3B6)	11/00-05/05	AFB, AKN	110	330321, 330324, 330341	330328, 330545, 330725	330141, 330231, 330297, 330496, 330497, 330644, 330687	330249, 330748	
	(3B3)	01/03-05/05	BAU, BDH	132	330321, 330341	330545, 330725	330141, 330644	330249, 330748	
	Variant (3B6)	01/03-05/05	BAU, BDH	132	330321, 330341	330545, 330725	330141, 330644	330249, 330748	
2.5 TDI Syncro/4motion	(3B2)	12/98-11/00	AFB, AKN	110	330324, 330341	330328	330141, 330231, 330297, 330497, 330644, 330687	330249, 330748	
	Variant (3B5)	12/98-11/00	AFB, AKN	110	330324, 330341	330328	330141, 330231, 330297, 330497, 330644, 330687	330249, 330748	
2.8	(3B3)	05/02-05/03	AMX	142		330725		330753	
2.8 4motion	(3B3)	11/00-05/05	AMX, ATQ	142	330324	330328, 330545, 330725	330141, 330231, 330496	330753	
	Variant (3B6)	11/00-05/05	AMX, ATQ	142	330324	330328, 330545, 330725	330141, 330231, 330496	330753	
2.8 Syncro	(3B2)	05/97-09/99	AGE	132	330322, 330324	330327, 330328	330141, 330231, 330297, 330497, 330687	330753	
	Variant (3B5)	05/97-09/99	AGE	132	330322, 330324	330327, 330328	330141, 330231, 330297, 330497, 330687	330753	

OPS Oil Pressure Switches **BLS** Brake Light Switches **TT-RF** Temperature Transmitter and Radiator Fan Switches **RLS** Reverse Light Switches **VAR** Various

ERA S.p.A. Moncalieri (TO) Italy - tel: +39 011 6891511 - fax: +39 011 6472862 - www.eranet.it

Vehicle		Date	Engine	kW	OPS	BLS	TT-RF	RLS	VAR
2.8 V6	(3B2)	05/97-09/99	AGE	132	330322, 330324	330327, 330328	330141, 330231, 330297, 330497, 330687	330753	
	Variant (3B5)	09/97-09/99	AGE	132	330322, 330324	330327, 330328	330141, 330231, 330297, 330497, 330687	330753	
	(3B2)	09/99-11/00	ATX, BBG	140	330322, 330324	330327, 330328, 330545, 330725	330141, 330231, 330297, 330497, 330687	330753	
	Variant (3B5)	09/99-11/00	ATX	140	330322, 330324	330327, 330328	330141, 330231, 330297, 330497, 330687	330753	
	(3B2)	08/96-11/00	ACK, APR, AQD	142	330322, 330324	330327, 330328	330141, 330231, 330297, 330496, 330497, 330687	330753	
	Variant (3B5)	06/97-11/00	ACK, APR, AQD	142	330322, 330324	330327, 330328	330141, 330231, 330297, 330496, 330497, 330687	330753	
2.8 V6 4motion	(3B2)	09/99-11/00	ATX	140	330322, 330324	330327, 330328	330141, 330231, 330297, 330497, 330687	330753	
	Variant (3B5)	09/99-11/00	ATX	140	330322, 330324	330327, 330328	330141, 330231, 330297, 330497, 330687	330753	
2.8 V6 Syncro/4motion	(3B2)	10/96-11/00	ACK, ALG, APR, AQD	142	330322, 330324	330327, 330328	330141, 330231, 330297, 330496, 330497, 330687	330753	
	Variant (3B5)	06/97-11/00	ACK, ALG, APR, AQD	142	330322, 330324	330327, 330328	330141, 330231, 330297, 330497, 330687	330753	
2.8 VR6	(3A2, 35I)	06/91-08/96	AAA	128	330322, 330342	330045, 330440	330103, 330123, 330152, 330163, 330164, 330286, 330296	330744	
	Variant (3A5, 35I)	06/91-05/97	AAA	128	330322, 330342	330045, 330440	330103, 330123, 330152, 330163, 330164, 330286, 330296	330744	
2.9 VR6 Syncro	Variant (3A5, 35I)	01/94-05/97	ABV	135	330322, 330342	330045, 330440	330103, 330123, 330151, 330163, 330164, 330281, 330282	330744	
3.2 FSI	(3C2)	11/05-	AXZ	184	330321		330546	330264	
	Variant (3C5)	11/05-	AXZ	184	330321		330546	330264	
3.2 FSI 4motion	(3C2)	11/05-	AXZ	184	330321		330546	330264, 330579	
	Variant (3C5)	11/05-	AXZ	184	330321		330546	330264, 330579	
3.6 FSI	(3C2)	06/05-07/07	BLV	206	330321		330546	330264, 330579	
	Variant (3C5)	09/05-	BLV	206	330321		330546	330264, 330579	
3.6 FSI 4motion	(3C2)	09/05-	BLV	206	330321		330546	330264, 330579	
	Variant (3C5)	09/05-	BLV	206	330321		330546	330264, 330579	
3.6 R36 4motion	(3C2)	04/07-	BWS	220	330541		330546	330264, 330579	
	Variant (3C5)	04/07-	BWS	220	330541		330546	330264, 330579	
4.0 W8 4motion	(3B3)	09/01-05/05	BDN, BDP	202	330324	330328, 330545, 330725	330546	330753	

OPS Oil Pressure Switches **BLS** Brake Light Switches **TT-RF** Temperature Transmitter and Radiator Fan Switches **RLS** Reverse Light Switches **VAR** Various

Vehicle		Date	Engine	kW	OPS	BLS	TT-RF	RLS	VAR
4.0 W8 4motion	Variant (3B6)	09/01-05/05	BDN, BDP	202	330324	330328, 330545, 330725	330546	330753	
PASSAT CC		**06/08 -**							
1.8 TSI		06/08-11/10	BZB	118	330324		330546	330264	
2.0 BlueTDI		05/09-11/10	CBAC	105				330579	
2.0 TDI		06/08-05/11	CBAA	100	330325		330546	330264, 330579	
		06/08-	CFFB	103	330325		330546	330264, 330579	
		06/08-	CFGB	125	330325		330546	330264, 330579	
2.0 TDI 4motion		08/09-	CFFB	103				330579	
2.0 TDI 4motion		11/09-	CFGB	125				330579	
2.0 TSI		06/08-	CAWB, CCTA	147	330324		330546	330264, 330579	
3.6 FSI 4motion		06/08-05/10	BWS	220	330541		330546	330264, 330579	
PHAETON		**04/02 -**							
3.0 V6 TDI 4motion	(3D2)	09/04-	BMK	165	330321, 330324	330545, 330725	330546		
	(3D2)	06/07-	CARA	171		330725			
	(3D2)	11/08-	CARB, CEXA	176		330725			
3.2 V6	(3D2)	04/02-	AYT, BKL	177	330324	330545, 330725	330546	330748	
3.2 V6 4motion	(3D2)	02/04-	BKL, BRK	177	330324	330545, 330725	330546	330748	
3.6 V6 4motion	(3D2)	11/08-	CHNA	206		330725			
4.2 V8 4motion	(3D2)	05/03-	BGH, BGJ	246	330324	330545, 330725	330546		
5.0 V10 TDI 4motion	(3D2)	11/02-	AJS	230	330324	330545, 330725	330546		
6.0 W12 4motion	(3D2)	04/02-	BAN	309	330324	330545, 330725	330230, 330546		
POLO		**10/81 -**							
1.0	(86C, 80)	10/81-10/86	GL	29	330004, 330322, 330337	330045, 330063, 330440	330103, 330114, 330162, 330268, 330284, 330296	330233, 330234, 330255, 330442, 330448	
	CLASSIC (86C, 80)	01/85-10/86	GL	29	330004, 330322, 330337	330045, 330063, 330440	330103, 330114, 330162, 330268, 330284, 330296	330233, 330234, 330255, 330442	
	Coupe (86C, 80)	05/82-10/86	GL	29	330004, 330322, 330337	330045, 330063, 330440	330103, 330114, 330162, 330268, 330284, 330296	330233, 330234, 330255, 330442	
	(86C, 80)	08/85-01/92	HZ	33	330004, 330322, 330337, 330342	330045, 330063, 330440	330103, 330114, 330162, 330280, 330282, 330284, 330296	330255, 330442	
	Box (6NF)	10/94-12/99	AAU	33	330322, 330342	330045, 330440	330103, 330280, 330282, 330286, 330296	330255, 330442	
	Box (86CF)	08/92-07/94	AAU	33	330322, 330342	330045, 330440	330103, 330280, 330282, 330286, 330296	330255, 330442	
	CLASSIC (86C, 80)	01/85-09/94	AAK, AAU, HZ	33	330004, 330322, 330337, 330342	330045, 330063, 330440	330103, 330114, 330162, 330268, 330280, 330282, 330284, 330286, 330296	330233, 330234, 330255, 330442	

OPS Oil Pressure Switches **BLS** Brake Light Switches **TT-RF** Temperature Transmitter and Radiator Fan Switches **RLS** Reverse Light Switches **VAR** Various

ERA S.p.A. Moncalieri (TO) Italy - tel: +39 011 6891511 - fax: +39 011 6472862 - www.eranet.it

Vehicle		Date	Engine	kW	OPS	BLS	TT-RF	RLS	VAR
1.0	Coupe (86C, 80)	08/85-01/92	HZ	33	330004, 330322, 330337, 330342	330045, 330063, 330440	330103, 330114, 330162, 330280, 330282, 330284, 330296	330255, 330442	
	(6N2)	10/99-09/01	ALD, AUC	37	330320	330440, 330503	330141, 330280, 330282, 330496	330264	
	Saloon	02/03-10/03	ARA	58	330320	330503, 330545, 330725	330230, 330546	330579	
1.0 CAT	(86C, 80)	08/89-09/94	AAK, AAU, ACM	33	330004, 330322, 330337, 330342	330045, 330063, 330440	330103, 330114, 330162, 330268, 330280, 330282, 330284, 330286, 330296	330233, 330234, 330255, 330442, 330448	
	Coupe (86C, 80)	08/89-09/94	AAK, AAU, ACM	33	330004, 330322, 330337, 330342	330045, 330063, 330440	330103, 330114, 330162, 330268, 330280, 330282, 330284, 330286, 330296	330233, 330234, 330255, 330442, 330448	
1.1	(86C, 80)	10/81-09/89	HB	37	330004, 330322, 330337	330045, 330063, 330440	330103, 330114, 330162, 330268, 330284, 330296	330233, 330234, 330255, 330442, 330448	
	Coupe (86C, 80)	10/81-07/83	HB	37	330004, 330322, 330337	330045, 330063, 330440	330103, 330114, 330162, 330268, 330284, 330296	330233, 330234, 330255, 330442	
1.2	(9N_)	01/02-05/07	AWY, BMD	40	330320	330503, 330725	330199, 330230, 330546	330264, 330579	
	(6R_)	06/09-	CGPB	44		330725		330579	
	(9N_)	05/07-	BBM	44	330320	330503, 330725	330199, 330230, 330546	330264, 330579	
	(6R_)	06/09-	CGPA	51		330725		330579	
1.2 12V	(9N_)	10/01-07/07	AZQ, BME	47	330320	330503, 330725	330199, 330230, 330546	330264, 330579	
	(9N_)	05/07-	BZG	51	330320	330503, 330725	330199, 330230, 330546	330264, 330579	
1.2 TDI	(6R_)	10/09-	CFWA	55		330725			
1.2 TSI	(6R_)	11/09-	CBZB	77		330725		330579	
1.3	(86C, 80)	08/83-07/88	HK, MH	40	330004, 330322, 330337	330045, 330063, 330440	330103, 330114, 330162, 330268, 330284, 330296	330233, 330234, 330255, 330442, 330448	
	Box (86CF)	08/92-07/94	AAV	40	330322, 330342	330045, 330440	330103, 330268, 330280, 330282, 330286, 330296	330255, 330442	
	CLASSIC (86C, 80)	01/85-07/87	HK, MH	40	330004, 330322, 330337	330045, 330063, 330440	330103, 330114, 330162, 330268, 330284, 330296	330233, 330234, 330255, 330442	
	Coupe (86C, 80)	08/83-06/87	HK, MH	40	330004, 330322, 330337	330045, 330063, 330440	330103, 330114, 330162, 330268, 330284, 330296	330233, 330234, 330255, 330442	
	(86C, 80)	10/81-07/83	HH	44	330004, 330322, 330337	330045, 330063, 330440	330103, 330114, 330162, 330268, 330284, 330296	330233, 330234, 330255, 330442, 330448	
	Coupe (86C, 80)	10/81-07/83	HH	44	330004, 330322, 330337	330045, 330063, 330440	330103, 330114, 330162, 330268, 330284, 330296	330233, 330234, 330255, 330442	
	(86C, 80)	09/82-09/89	GK	55	330004, 330322, 330337	330045, 330063, 330440	330103, 330114, 330162, 330268, 330284, 330296	330233, 330234, 330255, 330442, 330448	

OPS Oil Pressure Switches **BLS** Brake Light Switches **TT-RF** Temperature Transmitter and Radiator Fan Switches **RLS** Reverse Light Switches **VAR** Various

Vehicle		Date	Engine	kW	OPS	BLS	TT-RF	RLS	VAR
1.3	Coupe (86C, 80)	09/82-09/89	GK	55	330004, 330322, 330337	330045, 330063, 330440	330103, 330114, 330162, 330268, 330284, 330296	330233, 330234, 330255, 330442	
	Coupe (86C, 80)	03/91-09/94	3F	57	330004, 330322, 330337, 330342	330045, 330063, 330440	330103, 330114, 330162, 330268, 330280, 330282, 330284, 330286, 330296	330233, 330234, 330255, 330442	
1.3 CAT	(86C, 80)	07/87-09/94	2G, AAV, MH, NZ	40	330004, 330322, 330337, 330342	330045, 330063, 330440	330103, 330114, 330162, 330268, 330280, 330282, 330284, 330286, 330296	330233, 330234, 330255, 330442, 330448	
	CLASSIC (86C, 80)	07/87-09/94	MH, NZ	40	330004, 330322, 330337, 330342	330045, 330063, 330440	330103, 330114, 330162, 330268, 330280, 330282, 330284, 330286, 330296	330233, 330234, 330255, 330442, 330448	
1.3 CAT	Coupe (86C, 80)	07/87-08/94	2G, AAV, MH, NZ	40	330004, 330322, 330337, 330342	330045, 330063, 330440	330103, 330114, 330162, 330268, 330280, 330282, 330284, 330286, 330296	330233, 330234, 330255, 330442, 330448	
	(86C, 80)	10/89-03/91	3F	55	330004, 330322, 330337, 330342	330045, 330063, 330440	330103, 330114, 330162, 330268, 330280, 330282, 330284, 330286, 330296	330233, 330234, 330255, 330442, 330448	
	Coupe (86C, 80)	10/89-09/94	3F	55	330004, 330322, 330337, 330342	330045, 330063, 330440	330103, 330114, 330162, 330268, 330280, 330282, 330284, 330286, 330296	330233, 330234, 330255, 330442, 330448	
1.3 D	(86C, 80)	08/86-07/90	MN	33	330004, 330322, 330337	330045, 330063, 330440	330103, 330114, 330162, 330268, 330284, 330296	330233, 330234, 330255, 330442, 330448	
	CLASSIC (86C, 80)	08/86-12/88	MN	33	330004, 330322, 330337	330045, 330063, 330440	330103, 330114, 330162, 330268, 330284, 330296	330233, 330234, 330255, 330442	
	Coupe (86C, 80)	08/86-08/90	MN	33	330004, 330322, 330337	330045, 330063, 330440	330103, 330114, 330162, 330268, 330284, 330296	330233, 330234, 330255, 330442	
1.3 G40	Coupe (86C, 80)	08/90-09/94	PY	83	330322, 330342	330045, 330440	330103, 330280, 330282, 330286, 330296	330442	
	Coupe (86C, 80)	01/87-08/90	PY	85	330004, 330322, 330337	330045, 330063, 330440	330103, 330114, 330162, 330268, 330284, 330296	330233, 330234, 330255, 330442, 330448	
1.4	(6N2)	10/99-09/01	AKP, ANX	40	330320	330440, 330503	330141, 330280, 330282, 330496	330264	
	Variant (6KV5)	12/98-09/01	AKP	40	330320	330440, 330503	330141, 330280, 330282	330264	
	(6N2)	10/99-09/01	AKK, AUD	44	330320	330440, 330503	330141, 330280, 330282, 330496	330264	
	Box (6NF)	05/98-12/99	AEX, APQ	44	330319, 330342	330440	330161, 330280, 330282, 330287, 330497	330442	

OPS Oil Pressure Switches **BLS** Brake Light Switches **TT-RF** Temperature Transmitter and Radiator Fan Switches **RLS** Reverse Light Switches **VAR** Various

ERA S.p.A. Moncalieri (TO) Italy - tel: +39 011 6891511 - fax: +39 011 6472862 - www.eranet.it

Vehicle		Date	Engine	kW	OPS	BLS	TT-RF	RLS	VAR
1.4	Variant (6KV5)	05/97-09/01	AEX, AKK, AKV, ANW, APQ, AUD	44	330318, 330319, 330320, 330342	330072	330161, 330162, 330280, 330286, 330287, 330497	330264, 330442	
	Saloon	07/03-	BBY	55	330320	330503, 330725	330199, 330230, 330546	330264, 330579	
	(6R_)	06/09-	CGGB	63		330725		330579	
	Saloon	12/03-05/05	BLM	63	330320	330503, 330725	330199, 330230, 330546	330264, 330579	
	Saloon	11/03-	BBZ	74	330320	330503, 330725	330199, 330230, 330546	330264, 330579	
1.4 16V	(6N2)	10/99-09/01	AHW, APE, AUA	55	330320	330440, 330503	330141, 330280, 330282, 330496	330264	
	(9N_)	10/01-05/08	AUA, BBY, BKY	55	330320	330503, 330725	330199, 330230, 330546	330264, 330579	
	Variant (6KV5)	10/99-09/01	APE, AUA	55	330320	330072	330141, 330280, 330287, 330496, 330497	330264, 330442	
	(9N_)	05/06-	BUD	59	330320	330503, 330725	330199, 330230, 330546	330264, 330579	
	(6N2)	10/99-09/01	AFK, AQQ, AUB	74	330320	330440, 330503	330161, 330280, 330282	330264	
	(9N_)	10/01-05/08	AUB, BBZ	74	330320	330503, 330725	330199, 330230, 330546	330264, 330579	
1.4 D	(86C, 80)	10/90-09/94	1W	35	330322, 330341, 330342	330045, 330440	330103, 330280, 330282, 330296	330442	
	Box (86CF)	08/92-07/94	1W	35	330322, 330341, 330342	330045, 330440	330103, 330280, 330282, 330296	330442	
	CLASSIC (86C, 80)	10/90-09/94	1W	35	330322, 330341, 330342	330045, 330440	330103, 330280, 330282, 330296	330442	
	Coupe (86C, 80)	08/90-09/94	1W	35	330322, 330341, 330342	330045, 330440	330103, 330280, 330282, 330296	330442	
1.4 FSI	(9N_)	02/02-07/06	AXU	63	330320	330503, 330725	330199, 330230, 330546	330579	
1.4 TDI	(9N_)	04/05-	BNM	51	330325	330503, 330725	330199, 330230, 330546	330264, 330579	
	(6N2)	10/99-09/01	AMF	55	330325	330440, 330503, 330706	330141, 330199, 330496	330264	
	(9N_)	10/01-06/05	AMF, BAY	55	330325	330503, 330725	330199, 330230, 330546	330264, 330579	
	Saloon	07/03-	BAY	55	330325	330503, 330725	330199, 330230, 330546	330264, 330579	
	(9N_)	04/05-	BMS, BNV	59	330325	330503, 330725	330199, 330230, 330546	330264, 330579	
1.6	Box (6NF)	09/94-12/95	AEA	55	330342	330440	330161, 330280, 330282, 330287	330442	
	Variant (6KV5)	05/97-09/01	AEE, ALM	55	330342	330072	330141, 330161, 330162, 330280, 330286, 330287, 330496	330264, 330442	
	(9N_)	08/02-05/05	BAH	74		330725		330579	
	Saloon	09/02-	BAH	74	330320	330503, 330545, 330725	330199, 330230, 330546	330264, 330579	
	Variant (6KV5)	05/97-09/01	AEH, AFT, AKL, APF, AUR	74	330318, 330324, 330326, 330337, 330342	330072	330141, 330161, 330162, 330280, 330286, 330287, 330497	330255, 330264, 330442, 330579	

OPS Oil Pressure Switches **BLS** Brake Light Switches **TT-RF** Temperature Transmitter and Radiator Fan Switches **RLS** Reverse Light Switches **VAR** Various

Vehicle		Date	Engine	kW	OPS	BLS	TT-RF	RLS	VAR
1.6 16V	(9N_)	05/06-	BTS	77	330320	330503, 330725	330199, 330230, 330546	330264, 330579	
1.6 16V GTI	(6N2)	10/99-09/01	ARC, AVY	92	330320	330440, 330503	330141, 330280, 330282, 330496	330264	
1.6 TDI	(6R_)	06/09-	CAYA	55		330725			
	(6R_)	06/09-	CAYB	66		330725			
	(6R_)	06/09-	CAYC	77		330725			
1.6 Total Flex	Saloon	10/04-	BPA	74		330725		330579	
1.7 SDI	(6N1)	04/97-10/99	AHG	42	330321, 330341, 330342	330440, 330503, 330705, 330706	330280, 330282, 330286, 330287	330442	
	Variant (6KV5)	08/97-09/01	AKW	42	330318, 330325, 330341, 330342	330072	330280, 330287		
	(6N2)	10/99-09/01	AKU	44	330325	330440, 330503, 330706	330280, 330282, 330287	330264	
	Box (6NF)	08/97-12/99	AKU	44	330321, 330341, 330342	330440, 330503, 330705, 330706	330280, 330282, 330286, 330287	330442	
1.8 GTI	(9N_)	09/05-	BJX	110	330324	330503, 330725	330199, 330230, 330546	330264, 330579	
1.8 GTi Cup Edition	(9N_)	05/06-	BBU	132	330324	330503, 330725	330199, 330230, 330546	330264, 330579	
1.9 D	(6N2)	10/99-09/01	AEF	47	330325	330440, 330503	330128, 330280, 330282	330264	
	Box (6NF)	10/94-12/99	AEF	47	330321, 330341, 330342	330440	330123, 330128, 330163, 330164, 330280, 330282	330442	
1.9 SDI	(6N2)	10/99-09/01	AGD, ASX	47	330325	330440, 330503, 330706	330280, 330282, 330287	330264	
	(9N_)	10/01-	ASY	47	330325	330503, 330725	330199, 330230, 330546	330264, 330579	
	Box (6NF)	07/96-12/99	AGD	47	330325, 330341, 330342	330440, 330503, 330705, 330706	330280, 330282, 330286, 330287	330442	
	Saloon	09/02-	ASY	47	330325	330503, 330725	330199, 330230, 330546	330264, 330579	
	Variant (6KV5)	06/97-09/01	AEY	47	330318, 330325, 330341, 330342	330072	330123, 330280, 330286		
	Variant (6KV5)	08/99-09/01	AGP, AQM	50	330325	330072	330141, 330280, 330496, 330497	330264, 330442	
1.9 TDI	Variant (6KV5)	05/97-09/01	AGR, AHU, ALE, ALH	66	330318, 330321, 330325, 330341, 330342	330072	330141, 330161, 330280, 330496, 330497	330744	
	(9N_)	10/01-	ATD, AXR	74	330325	330503, 330725	330199, 330230, 330546	330264, 330579	
	Saloon	09/02-	ATD	74	330325	330503, 330725	330199, 330230, 330546	330579	
	Variant (6KV5)	06/98-09/01	AFN, ASV	81	330318, 330321, 330325, 330341, 330342	330072	330141, 330161, 330280, 330496, 330497	330744	
	(9N_)	11/03-	ASZ, BLT	96	330325	330503, 330725	330199, 330230, 330546	330264, 330579	
100 1.4 16V	(6N1)	04/96-10/99	AFH	74	330319, 330342	330440	330161, 330280, 330282, 330287	330442	
100 1.6	CLASSIC (6KV2)	12/95-09/01	AEH, AFT, AKL, APF, AUR	74	330318, 330324, 330326, 330337, 330342	330072	330141, 330161, 330162, 330280, 330286, 330287, 330497	330255, 330264, 330442, 330579	

OPS Oil Pressure Switches **BLS** Brake Light Switches **TT-RF** Temperature Transmitter and Radiator Fan Switches **RLS** Reverse Light Switches **VAR** Various

ERA S.p.A. Moncalieri (TO) Italy - tel: +39 011 6891511 - fax: +39 011 6472862 - www.eranet.it

Vehicle		Date	Engine	kW	OPS	BLS	TT-RF	RLS	VAR
110 1.9 TDI	CLASSIC (6KV2)	06/98-09/01	AFN, ASV	81	330318, 330321, 330325, 330341, 330342	330072	330141, 330161, 330280, 330497	330744	
120 1.6 16V GTI	(6N1)	09/98-10/99	AJV	88	330320	330440	330280, 330282, 330497	330442	
2.0	(9N_)	10/04-	BBX	85		330725		330579	
	CLASSIC (6KV2)	08/99-09/01	ADC	85	330337, 330342	330072	330123, 330161, 330162, 330280, 330286, 330287	330264, 330442	
	Saloon	09/02-	BBX	85	330324	330503, 330545, 330725	330199, 330230, 330546	330264, 330579	
45 1.0	(6N1)	10/94-09/96	AEV	33	330342	330440	330103, 330280, 330282, 330286, 330287	330442	
50 1.0	(6N1)	09/96-10/99	AER, ALL	37	330319, 330342	330440	330161, 330280, 330282, 330287	330442	
55 1.3	(6N1)	10/94-07/95	ADX	40	330342	330440	330280, 330282, 330287	330442	
55 1.4	(6N1)	08/95-10/99	AEX	40	330319, 330342	330440	330161, 330280, 330282, 330287	330442	
57 1.7 SDI	CLASSIC (6KV2)	07/97-09/01	AKW	42	330318, 330325, 330341, 330342	330072	330280, 330287		
60 1.4	(6N1)	07/95-10/99	AEX, AKV, APQ	44	330319, 330342	330440	330161, 330280, 330282, 330287, 330497	330442	
	CLASSIC (6KV2)	12/95-09/01	AEX, AKK, AKV, ANW, APQ, AUD	44	330318, 330320, 330342	330072	330161, 330162, 330280, 330286, 330287, 330496, 330497	330264, 330442	
60 1.7 SDI	(6N1)	08/97-10/99	AKU	44	330321, 330341, 330342	330440, 330503, 330705, 330706	330280, 330282, 330286, 330287	330442	
64 1,9 D	CLASSIC (6KV2)	01/96-10/96	1Y	47	330318, 330321, 330341, 330342	330072	330123, 330128, 330164, 330280	330442	
64 1.9 D	(6N1)	10/94-10/99	AEF	47	330321, 330341, 330342	330440	330123, 330128, 330163, 330164, 330280, 330282	330442	
64 1.9 SDI	(6N1)	07/96-10/99	AGD	47	330325, 330341, 330342	330440, 330503, 330705, 330706	330280, 330282, 330286, 330287	330442	
	CLASSIC (6KV2)	12/95-08/99	1Y, AEY	47	330318, 330321, 330325, 330341, 330342	330072	330123, 330128, 330164, 330280, 330286	330442	
68 1.9 SDI	CLASSIC (6KV2)	08/99-09/01	AGP, AQM	50	330325	330072	330141, 330280, 330497	330264, 330442	
75 1.4 16V	CLASSIC (6KV2)	10/99-09/01	APE, AUA	55	330320	330072	330141, 330280, 330287, 330496, 330497	330264, 330442	
75 1.6	(6N1)	10/94-10/99	AEA, AEE, AHS	55	330319, 330342	330440	330161, 330280, 330282, 330287	330442	
	CLASSIC (6KV2)	11/95-09/01	AEE, ALM	55	330342	330072	330141, 330161, 330162, 330280, 330286, 330287	330264, 330442	
	CLASSIC (6KV2)	11/95-09/97	1F	55	330337, 330342	330072	330162, 330280, 330286, 330287, 330646	330255, 330442	
90 1.8	CLASSIC (6KV2)	01/97-09/01	ADD	66	330337, 330342	330072	330123, 330161, 330280, 330286, 330287	330264, 330442	

OPS Oil Pressure Switches **BLS** Brake Light Switches **TT-RF** Temperature Transmitter and Radiator Fan Switches **RLS** Reverse Light Switches **VAR** Various

Vehicle		Date	Engine	kW	OPS	BLS	TT-RF	RLS	VAR
90 1.9 TDI	CLASSIC (6KV2)	09/96-09/01	AGR, AHU, ALE, ALH	66	330318, 330321, 330325, 330341, 330342	330072	330141, 330161, 330280, 330497	330744	
POLO PLAYA		**05/96 - 07/02**							
1.4		05/96-07/02	AGY	62	330337, 330342		330161, 330162, 330280, 330286, 330287	330255, 330442	
SANTANA		**08/81 - 12/85**							
1.6	(32B)	08/81-12/84	DT	55	330004, 330322, 330337	330045, 330440	330268, 330284, 330296	330234	
1.6 D	(32B)	08/81-12/84	CR, JK	40	330368				
1.6 TD	(32B)	12/81-12/84	CY	51	330004, 330322, 330337, 330368	330045, 330440	330268, 330284, 330296	330234	
1.8	(32B)	01/83-12/84	DS	66	330004, 330322, 330337	330045, 330440	330268, 330284, 330296	330234	
1.9	(32B)	08/81-07/83	WN	85	330004, 330322, 330337	330045, 330440	330268, 330284, 330296	330234	
2.0	(32B)	08/83-12/84	HP, JS	85	330004, 330323	330045, 330440	330268, 330284, 330296	330234	
SCIROCCO		**02/74 -**							
1.1	(53)	04/74-07/79	FA	37	330004, 330368	330063, 330414	330284, 330296	330234, 330448	
1.3	(53)	08/79-07/80	GF	44	330004, 330368	330063, 330414	330284, 330296	330234, 330448	
	(53B)	08/80-12/83	GF	44	330004	330063, 330414	330284, 330296	330234, 330448	
1.4 TSI	(137)	08/08-	CAXA	90	330320		330546	330264, 330579	
	(137)	05/08-	CNWA	118	330320		330546	330264	
1.5	(53)	08/77-07/80	JB	51	330004, 330368	330063, 330414	330284, 330296	330233, 330448	
	(53)	02/74-12/75	FH	51		330414		330448	
	(53B)	08/80-12/83	JB	51		330414		330448	
	(53)	02/74-08/75	YJ, ZB	55		330414		330448	
	(53)	02/74-12/77	ZC	63	330368	330414		330448	
1.6	(53B)	08/83-07/84	EWA	51	330337, 330342	330045, 330063, 330440	330103, 330162, 330284, 330296, 330307	330442	
	(53B)	04/86-07/90	RE	53	330323, 330337, 330342	330414, 330440	330103, 330162, 330284, 330286, 330296, 330307	330442, 330448	
	(53)	08/75-07/79	FN, FP	55	330368	330414		330448	
	(53B)	01/83-12/89	EW	55	330323, 330337, 330342	330045, 330063, 330414, 330440	330103, 330162, 330284, 330286, 330296, 330307	330442, 330448	
	(53)	08/75-07/80	FR	63	330368	330414		330448	
	(53B)	08/80-04/84	FR	63	330004	330063, 330414	330284, 330296	330233, 330448	
	(53)	06/76-07/80	EG	81	330368	330414		330448	
	(53B)	08/80-07/82	EG	81		330414		330448	
1.8	(53B)	08/83-07/92	EX	66	330323, 330337, 330342	330045, 330063, 330414, 330440	330103, 330162, 330284, 330286, 330296, 330307	330442, 330448	

OPS Oil Pressure Switches **BLS** Brake Light Switches **TT-RF** Temperature Transmitter and Radiator Fan Switches **RLS** Reverse Light Switches **VAR** Various

ERA S.p.A. Moncalieri (TO) Italy - tel: +39 011 6891511 - fax: +39 011 6472862 - www.eranet.it

Vehicle		Date	Engine	kW	OPS	BLS	TT-RF	RLS	VAR
1.8	(53B)	11/85-07/92	JH	70	330323, 330337, 330342	330045, 330063, 330414, 330440	330103, 330162, 330284, 330286, 330296, 330308	330442, 330448	
	(53B)	08/82-12/89	DX, EV, JJ, PB	82	330337, 330342	330045, 330063, 330414, 330440	330103, 330162, 330284, 330286, 330296, 330308	330442, 330448	
1.8 16V	(53B)	03/86-07/92	PL	95	330337, 330342	330414, 330440	330103, 330127, 330162, 330284, 330286, 330296, 330308	330442, 330448	
	(53B)	10/85-07/89	KR	102	330337, 330342	330414, 330440	330103, 330162, 330284, 330286, 330296, 330308	330442, 330448	
2.0 R	(137)	11/09-	CDLA	195				330579	
2.0 TDI	(137)	08/08-	CFHC	103	330325		330546	330264, 330579	
	(137)	05/09-	CFGB	125				330579	
2.0 TSI	(137)	05/08-11/09	CAWB	147	330324		330546	330264, 330579	
	(137)	11/09-05/11	CCZB	155				330579	
SHARAN		**05/95 -**							
1.4 TSI	(7N)	05/10-	CAVA	110				330579	
1.8 T 20V	(7M8, 7M9, 7M6)	09/97-03/10	AJH, AWC	110	330318, 330322, 330324, 330342	330440, 330706, 330725	330103, 330123, 330162, 330164, 330280, 330287, 330288, 330497, 330546	330264, 330544, 330579	
1.9 TDI	(7M8, 7M9, 7M6)	09/95-03/10	1Z, AHU, ANU	66	330318, 330321, 330325, 330341, 330342	330440, 330705, 330706, 330725	330103, 330123, 330141, 330162, 330163, 330164, 330280, 330287, 330288, 330496, 330546	330264, 330544, 330579	
	(7M8, 7M9, 7M6)	09/96-04/00	AFN, AVG	81	330341, 330342	330440, 330705	330103, 330123, 330162, 330163, 330164, 330280, 330287, 330288	330544	
	(7M8, 7M9, 7M6)	04/00-03/10	AUY	85	330325	330440, 330706, 330725	330103, 330141, 330280, 330496, 330546	330264, 330544, 330579	
	(7M8, 7M9, 7M6)	11/02-03/10	ASZ	96	330325	330440, 330706, 330725	330103, 330280, 330546	330264, 330544, 330579	
	(7M8, 7M9, 7M6)	06/05-03/10	BTB	110	330325	330440, 330706, 330725	330103, 330280, 330546	330264, 330544, 330579	
1.9 TDI 4motion	(7M8, 7M9, 7M6)	04/00-03/10	AUY	85	330325	330440, 330706, 330725	330103, 330141, 330280, 330496, 330546	330264, 330544, 330579	
2.0	(7M8, 7M9, 7M6)	09/95-03/10	ADY, ATM	85	330318, 330324, 330326, 330337, 330342	330440, 330706, 330725	330103, 330123, 330162, 330163, 330164, 330280, 330287, 330288, 330546	330264, 330544, 330579	
2.0 LPG	(7M8, 7M9, 7M6)	04/06-03/10	ATM	85		330706, 330725		330579	
2.0 TDI	(7M8, 7M9, 7M6)	11/05-03/10	BRT	103	330325	330440, 330706, 330725	330103, 330280, 330546	330264, 330544, 330579	
	(7N)	05/10-	CFFB	103				330579	

OPS Oil Pressure Switches **BLS** Brake Light Switches **TT-RF** Temperature Transmitter and Radiator Fan Switches **RLS** Reverse Light Switches **VAR** Various

Vehicle		Date	Engine	kW	OPS	BLS	TT-RF	RLS	VAR
2.0 TDI	(7N)	08/10-	CFGB	125				330579	
2.8 V6 24V	(7M8, 7M9, 7M6)	04/00-03/10	AYL	150	330324	330440, 330706, 330725	330103, 330280, 330546	330264, 330544, 330579	
2.8 V6 24V 4motion	(7M8, 7M9, 7M6)	04/00-03/10	AYL	150	330324	330440, 330706, 330725	330103, 330280, 330546	330264, 330544, 330579	
2.8 VR6	(7M8, 7M9, 7M6)	09/95-04/00	AAA, AMY	128	330318, 330322, 330324, 330342	330440	330103, 330123, 330152, 330162, 330163, 330164, 330280, 330286, 330288	330544	
2.8 VR6 Syncro	(7M8, 7M9, 7M6)	11/96-04/00	AAA, AMY	128	330318, 330322, 330324, 330342	330440	330103, 330123, 330152, 330162, 330163, 330164, 330280, 330286, 330288	330544	
SPACEFOX			**03/06 -**						
1.6	(5Z6, 5Z7)	03/06-	BAH, BLH	74	330320	330545, 330725	330141	330264, 330579	
1.6 FSI	(5Z6, 5Z7)	03/06-	BPA, CCRA, CFZA	74	330320	330545, 330725	330141	330579	
1.6 Total Flex	(5Z6, 5Z7)	03/06-	BPA	74	330320	330545, 330725	330141	330579	
1.9 SDI	(5Z6, 5Z7)	09/07-	ASY	47	330320	330545, 330725	330141, 330230	330264, 330579	
TARO			**04/89 - 03/97**						
1.8		04/89-09/94	2Y	61	330009, 330022, 330567	330039, 330059		330743	
2.2		06/89-07/94	4Y	69	330009, 330022, 330567	330039, 330059		330743	
2.4 D		06/89-03/97	2L	61	330008	330039, 330059		330743	
2.4 D 4x4		04/89-03/97	2L	61	330008	330039, 330059		330743	
2.4 i 4x4		06/89-03/97	22R	84	330009, 330022, 330567	330039, 330059	330130	330743	
TIGUAN			**09/07 -**						
1.4 TSI	(5N_)	08/10-	CAXA	90				330579	
	(5N_)	05/08-	BWK, CAVA	110	330320		330546	330579	
1.4 TSI 4motion	(5N_)	09/07-	BWK	110	330320		330546	330579	
2.0 TDI	(5N_)	05/10-	CFFD	81				330579	
	(5N_)	03/08-	CBAB	103	330325		330546	330579	
2.0 TDI 4motion	(5N_)	11/07-	CBAA	100	330325		330546	330579	
	(5N_)	09/07-	CBAB	103	330325		330546	330579	
	(5N_)	09/07-	CBBB	125				330579	
2.0 TFSI 4motion	(5N_)	09/07-	CAWA	125	330324		330546	330579	
	(5N_)	09/07-	CAWB	147	330324		330546	330579	
TOUAREG			**10/02 - 05/10**						
2.5 R5 TDI	(7LA, 7L6, 7L7)	08/03-05/10	BLK	120	330325	330545	330546		
	(7LA, 7L6, 7L7)	01/03-05/10	BAC	128	330325	330545	330546		
3.0 TDI	(7LA, 7L6, 7L7)	04/06-05/10	BUN, CASB	155	330321	330545	330141, 330546		
3.0 Tdi 4motion	(7LA, 7L6, 7L7)	11/07-	--	176	330321	330545	330546		

OPS Oil Pressure Switches **BLS** Brake Light Switches **TT-RF** Temperature Transmitter and Radiator Fan Switches **RLS** Reverse Light Switches **VAR** Various

ERA S.p.A. Moncalieri (TO) Italy - tel: +39 011 6891511 - fax: +39 011 6472862 - www.eranet.it

Vehicle		Date	Engine	kW	OPS	BLS	TT-RF	RLS	VAR
3.0 V6 TDI	(7LA, 7L6, 7L7)	11/04-05/10	BKS	165	330321, 330324	330545	330141, 330546		
	(7LA, 7L6, 7L7)	11/07-05/10	CASA	176	330321	330545	330546		
3.2 V6	(7LA, 7L6, 7L7)	10/02-11/06	AZZ, BKJ	162	330324	330545	330546		
	(7LA, 7L6, 7L7)	11/04-11/06	BMX	177	330324	330545	330546		
3.6 V6 FSI	(7LA, 7L6, 7L7)	10/05-05/10	BHK, BHL	206	330324	330545	330546		
4.2 V8	(7LA, 7L6, 7L7)	12/02-11/06	AXQ, BHX	228	330324	330545	330230, 330546		
4.2 V8 FSI	(7LA, 7L6, 7L7)	06/06-05/10	BAR	257	330324	330545	330546		
5.0 R50 TDI	(7LA, 7L6, 7L7)	08/07-05/10	CBWA	257	330324	330545	330546		
5.0 V10 TDI	(7LA, 7L6, 7L7)	10/02-05/10	AYH	230	330324	330545	330546		
6.0 W12	(7LA, 7L6, 7L7)	08/04-05/10	BJN	331	330324	330545	330546		
TOURAN			**02/03 -**						
1.4 FSI	(1T1, 1T2, 1T3)	11/06-	BLG	125	330320	330503, 330545	330546		
1.4 TSI	(1T1, 1T2, 1T3)	02/06-	BMY	103	330320	330503, 330545	330546	330264, 330579	
1.6	(1T1, 1T2, 1T3)	07/03-05/10	BGU, BSE, BSF	75	330324, 330325	330503, 330545, 330725	330230, 330546	330264, 330579	
1.6 FSI	(1T1, 1T2, 1T3)	02/03-01/07	BAG, BLF, BLP	85	330320	330503, 330545, 330725	330230, 330546	330264, 330579	
1.9 TDI	(1T1, 1T2, 1T3)	11/04-05/10	BRU	66	330325	330503, 330545, 330725	330230, 330546	330264, 330579	
	(1T1, 1T2, 1T3)	02/03-	AVQ	74	330325	330503, 330545, 330725	330230, 330546	330264, 330579	
	(1T1, 1T2, 1T3)	08/03-05/10	BKC	77	330325	330503, 330545, 330725	330230, 330546	330264, 330579	
2.0 EcoFuel	(1T1, 1T2, 1T3)	02/06-05/09	BSX	80	330324	330503, 330545	330230, 330546	330264, 330579	
2.0 FSI	(1T1, 1T2, 1T3)	10/04-	BJZ	85		330725		330579	
	(1T1, 1T2, 1T3)	10/03-	AXW, BLR, BLX, BLY	110		330503, 330545, 330725	330230, 330546	330264, 330579	
2.0 TDI	(1T1, 1T2, 1T3)	02/03-05/10	AZV	100	330325	330503, 330545, 330725	330230, 330546	330264, 330579	
	(1T1, 1T2, 1T3)	12/05-05/10	BMM	103	330325	330503, 330545	330546	330264, 330579	
	(1T1, 1T2, 1T3)	12/05-	BMN	125	330325	330503, 330545	330546	330264, 330579	
2.0 TDI 16V	(1T1, 1T2, 1T3)	08/03-	BKD	103	330325	330503, 330545, 330725	330230, 330546	330264, 330579	
TRANSPORTER			**08/67 -**						
1.6	II Bus	08/67-07/70	AF	34	330368				
	II Box	08/70-04/79	AD, AE, AS	37	330368				
	II Bus	08/70-04/79	AD, AH, AS	37	330368				
	II Flatbed / Chassis	08/68-07/79	AD, AS	37	330368				
	III Box	05/79-12/82	CT	37			330204		
	III Bus	05/79-12/82	CT	37	330368		330204		
1.7	II Box	08/71-12/73	CA, CB	49	330368				
	II Bus	08/71-10/73	CA, CB	49	330368				
1.8	IV Bus (70XB, 70XC, 7DB, 7DW)	12/90-07/92	PD	49	330337, 330342	330440	330152, 330162, 330164, 330212, 330283, 330288	330442	

OPS Oil Pressure Switches **BLS** Brake Light Switches **TT-RF** Temperature Transmitter and Radiator Fan Switches **RLS** Reverse Light Switches **VAR** Various

Vehicle		Date	Engine	kW	OPS	BLS	TT-RF	RLS	VAR
1.8	II Box	11/73-07/75	AP	50	330368				
	II Bus	11/73-07/75	AP	50	330368				
1.9	III Box	10/82-07/92	DF	44			330204		
	III Bus	08/82-07/92	DF	44			330204		
	III Box	10/82-07/92	DG	57			330204		
	III Bus	08/82-07/92	DG	57			330204		
	III Bus	01/83-07/85	DH	61			330204		
	III Box	08/83-02/89	GW	66			330204		
	III Bus	08/83-07/85	GW	66			330204		
1.9 Syncro	III Box	11/84-07/92	DG	57			330204		
	III Bus	02/85-07/92	DG	57			330204		
1.9 D	IV Bus (70XB, 70XC, 7DB, 7DW)	09/90-04/03	1X	44	330322, 330341, 330342	330440	330103, 330152, 330162, 330164, 330212, 330283, 330288	330442	
	IV Box (70XA)	07/90-04/03	1X	45	330322, 330341, 330342	330440	330103, 330152, 330162, 330164, 330212, 330283, 330288	330442	
	IV Flatbed / Chassis (70XD)	07/90-04/03	1X	45	330322, 330341, 330342	330440	330103, 330152, 330162, 330164, 330212, 330283, 330288	330442	
1.9 TD	IV Box (70XA)	10/92-04/03	ABL	50	330322, 330325, 330341, 330342	330440	330103, 330128, 330151, 330152, 330162, 330164, 330212, 330283, 330288	330442, 330544	
	IV Bus (70XB, 70XC, 7DB, 7DW)	10/92-04/03	ABL	50	330322, 330325, 330341, 330342	330440	330103, 330128, 330151, 330152, 330162, 330164, 330212, 330283, 330288	330442, 330544	
	IV Flatbed / Chassis (70XD)	10/92-04/03	ABL	50	330322, 330325, 330341, 330342	330440	330103, 330128, 330151, 330152, 330162, 330164, 330212, 330283, 330288	330442, 330544	
1.9 TDI	V Box (7HA, 7HH, 7EA, 7EH)	01/06-11/09	BRR	62	330325	330725	330546	330264, 330544, 330579	
	V Bus (7HB, 7HJ, 7EB, 7EJ, 7EF)	01/06-11/09	BRR	62	330325	330725	330546	330264, 330544, 330579	
	V Flatbed / Chassis (7JD, 7JE, 7JL, 7JY, 7JZ, 7F	01/06-11/09	BRR	62	330325	330725	330546	330264, 330544, 330579	
	V Box (7HA, 7HH, 7EA, 7EH)	04/03-11/09	AXC	63	330325	330725	330546	330264, 330544, 330579	
	V Bus (7HB, 7HJ, 7EB, 7EJ, 7EF)	04/03-11/09	AXC	63	330325	330725	330546	330264, 330544, 330579	
	V Flatbed / Chassis (7JD, 7JE, 7JL, 7JY, 7JZ, 7F	04/03-11/09	AXC	63	330325	330725	330546	330264, 330544, 330579	
	V Box (7HA, 7HH, 7EA, 7EH)	06/06-11/09	BRS	75	330325	330725	330546	330264, 330544, 330579	
	V Bus (7HB, 7HJ, 7EB, 7EJ, 7EF)	06/06-11/09	BRS	75	330325	330725	330546	330264, 330544, 330579	

OPS Oil Pressure Switches **BLS** Brake Light Switches **TT-RF** Temperature Transmitter and Radiator Fan Switches **RLS** Reverse Light Switches **VAR** Various

ERA S.p.A. Moncalieri (TO) Italy - tel: +39 011 6891511 - fax: +39 011 6472862 - www.eranet.it

Vehicle		Date	Engine	kW	OPS	BLS	TT-RF	RLS	VAR
1.9 TDI	V Flatbed / Chassis (7JD, 7JE, 7JL, 7JY, 7JZ, 7F	06/06-11/09	BRS	75	330325	330725	330546	330264, 330544, 330579	
	V Box (7HA, 7HH, 7EA, 7EH)	04/03-11/09	AXB	77	330325	330725	330546	330264, 330544, 330579	
	V Bus (7HB, 7HJ, 7EB, 7EJ, 7EF)	04/03-11/09	AXB	77	330325	330725	330546	330264, 330544, 330579	
	V Flatbed / Chassis (7JD, 7JE, 7JL, 7JY, 7JZ, 7F	04/03-11/09	AXB	77	330325	330725	330546	330264, 330544, 330579	
2.0	II Box	08/75-07/79	CJ, GD, GE	51	330368				
	II Bus	08/75-04/79	CJ, GD, GE	51	330368				
	III Box	05/79-04/86	CU	51			330204		
	III Bus	05/79-12/82	CU, CV	51	330368		330204		
	IV Box (70XA)	07/90-04/03	AAC	62	330318, 330322, 330324, 330326, 330337, 330342	330440	330141, 330152, 330162, 330164, 330212, 330283, 330286, 330287, 330288, 330496	330442, 330544	
	IV Bus (70XB, 70XC, 7DB, 7DW)	09/90-04/03	AAC	62	330318, 330322, 330324, 330326, 330337, 330342	330440	330141, 330152, 330162, 330164, 330212, 330283, 330286, 330287, 330288, 330496	330442, 330544	
	IV Flatbed / Chassis (70XD)	07/90-04/03	AAC	62	330318, 330322, 330324, 330326, 330337, 330342	330440	330141, 330152, 330162, 330164, 330212, 330283, 330286, 330287, 330288	330442, 330544	
	V Box (7HA, 7HH, 7EA, 7EH)	11/03-	AXA	85	330321	330440, 330725	330497, 330546	330264, 330544, 330579	
	V Bus (7HB, 7HJ, 7EB, 7EJ, 7EF)	11/03-	AXA	85	330321	330440, 330725	330497, 330546	330264, 330544, 330579	
	V Flatbed / Chassis (7JD, 7JE, 7JL, 7JY, 7JZ, 7F	11/03-	AXA	85	330321	330440, 330725	330497, 330546	330264, 330544, 330579	
2.0 BiTDI	V Box (7HA, 7HH, 7EA, 7EH)	09/09-	CFCA	132				330579	
	V Bus (7HB, 7HJ, 7EB, 7EJ, 7EF)	09/09-	CFCA	132				330579	
	V Flatbed / Chassis (7JD, 7JE, 7JL, 7JY, 7JZ, 7F	09/09-	CFCA	132				330579	
2.0 BiTDI 4motion	V Box (7HA, 7HH, 7EA, 7EH)	09/09-	CFCA	132				330579	
	V Bus (7HB, 7HJ, 7EB, 7EJ, 7EF)	09/09-	CFCA	132				330579	
	V Flatbed / Chassis (7JD, 7JE, 7JL, 7JY, 7JZ, 7F	09/09-	CFCA	132				330579	
2.0 TDI	V Box (7HA, 7HH, 7EA, 7EH)	09/09-	CAAA	62		330725			
	V Bus (7HB, 7HJ, 7EB, 7EJ, 7EF)	09/09-	CAAA	62		330725			
	V Flatbed / Chassis (7JD, 7JE, 7JL, 7JY, 7JZ, 7F	09/09-	CAAA	62		330725			
	V Box (7HA, 7HH, 7EA, 7EH)	09/09-	CAAB	75		330725			
	V Bus (7HB, 7HJ, 7EB, 7EJ, 7EF)	09/09-	CAAB	75		330725			
	V Flatbed / Chassis (7JD, 7JE, 7JL, 7JY, 7JZ, 7F	09/09-	CAAB	75		330725			

OPS Oil Pressure Switches **BLS** Brake Light Switches **TT-RF** Temperature Transmitter and Radiator Fan Switches **RLS** Reverse Light Switches **VAR** Various

Vehicle		Date	Engine	kW	OPS	BLS	TT-RF	RLS	VAR
2.0 TDI	V Box (7HA, 7HH, 7EA, 7EH)	09/09-	CAAC	103		330725		330579	
	V Bus (7HB, 7HJ, 7EB, 7EJ, 7EF)	09/09-	CAAC	103		330725		330579	
	V Flatbed / Chassis (7JD, 7JE, 7JL, 7JY, 7JZ, 7F	09/09-	CAAC	103		330725		330579	
2.0 TDI 4motion	V Box (7HA, 7HH, 7EA, 7EH)	09/09-	CAAC	103		330725		330579	
	V Bus (7HB, 7HJ, 7EB, 7EJ, 7EF)	09/09-	CAAC	103		330725		330579	
	V Flatbed / Chassis (7JD, 7JE, 7JL, 7JY, 7JZ, 7F	09/09-	CAAC	103		330725		330579	
2.1	III Bus	10/86-07/92	SR	64			330204		
	III Box	08/85-07/92	MV	70			330204		
	III Bus	08/85-07/92	MV	70			330204		
	III Box	03/86-07/92	DJ	82			330204		
	III Bus	08/85-07/92	DJ	82			330204		
2.1 CAT	III Bus	06/89-07/92	MV	70			330204		
2.1 Syncro	III Bus	10/86-07/92	SR	64			330204		
	III Box	08/85-07/92	MV	70			330204		
	III Bus	08/85-07/92	MV	70			330204		
	III Box	03/86-07/92	DJ	82			330204		
	III Bus	01/86-07/92	DJ	82			330204		
2.1 i	III Box	07/89-07/92	SS	68			330204		
	III Bus	07/89-07/92	SS	68			330204		
2.4 D	IV Box (70XA)	08/97-04/03	AJA	55	330325, 330341, 330342	330440	330103, 330128, 330151, 330283, 330288	330442, 330544	
	IV Bus (70XB, 70XC, 7DB, 7DW)	08/97-04/03	AJA	55	330325, 330341, 330342	330440	330103, 330128, 330151, 330283, 330288	330442, 330544	
	IV Flatbed / Chassis (70XD)	08/97-04/03	AJA	55	330325, 330341, 330342	330440	330103, 330128, 330151, 330283, 330288	330442, 330544	
	IV Box (70XA)	07/90-04/98	AAB	57	330322, 330341, 330342	330440	330103, 330151, 330162, 330212, 330222, 330283, 330288	330442, 330544	
	IV Bus (70XB, 70XC, 7DB, 7DW)	09/90-04/98	AAB	57	330322, 330341, 330342	330440	330103, 330151, 330162, 330212, 330222, 330283, 330288	330442, 330544	
	IV Flatbed / Chassis (70XD)	09/90-04/98	AAB	57	330322, 330341, 330342	330440	330103, 330151, 330162, 330212, 330222, 330283, 330288	330442, 330544	
2.4 D Syncro	IV Box (70XA)	10/92-09/98	AAB	57	330322, 330341, 330342	330440	330103, 330151, 330162, 330212, 330222, 330283, 330288	330442, 330544	
	IV Bus (70XB, 70XC, 7DB, 7DW)	10/92-09/98	AAB	57	330322, 330341, 330342	330440	330103, 330151, 330162, 330212, 330222, 330283, 330288	330442, 330544	

OPS Oil Pressure Switches **BLS** Brake Light Switches **TT-RF** Temperature Transmitter and Radiator Fan Switches **RLS** Reverse Light Switches **VAR** Various

ERA S.p.A. Moncalieri (TO) Italy - tel: +39 011 6891511 - fax: +39 011 6472862 - www.eranet.it

Vehicle		Date	Engine	kW	OPS	BLS	TT-RF	RLS	VAR
2.4 D Syncro	IV Flatbed / Chassis (70XD)	10/92-09/98	AAB	57	330322, 330341, 330342	330440	330103, 330151, 330162, 330212, 330222, 330283, 330288	330442, 330544	
2.5	IV Box (70XA)	11/90-04/03	AAF, ACU, AEN, AEU	81	330322, 330325, 330337, 330342	330440	330103, 330141, 330151, 330162, 330212, 330283, 330286, 330287, 330288, 330496	330442, 330544	
	IV Bus (70XB, 70XC, 7DB, 7DW)	11/90-04/03	AAF, ACU, AEN, AEU	81	330322, 330325, 330337, 330342	330440	330103, 330141, 330151, 330162, 330212, 330283, 330286, 330287, 330288, 330496	330442, 330544	
	IV Flatbed / Chassis (70XD)	11/90-04/03	AAF, ACU, AEN, AEU	81	330322, 330325, 330337, 330342	330440	330103, 330141, 330151, 330162, 330212, 330283, 330286, 330287, 330288, 330496	330442, 330544	
2.5	IV Box (70XA)	08/96-04/03	AET, APL, AVT	85	330325, 330337, 330342	330440, 330706	330103, 330141, 330151, 330152, 330283, 330286, 330287, 330288, 330496	330442, 330544	
	IV Bus (70XB, 70XC, 7DB, 7DW)	08/96-04/03	AET, APL, AVT	85	330325, 330337, 330342	330440, 330706	330103, 330141, 330151, 330152, 330283, 330286, 330287, 330288, 330496	330442, 330544	
	IV Flatbed / Chassis (70XD)	08/96-04/03	AET, APL, AVT	85	330325, 330337, 330342	330440, 330706	330103, 330141, 330151, 330152, 330283, 330286, 330287, 330288, 330496	330442, 330544	
	V Box (7HA, 7HH, 7EA, 7EH)	05/03-	AXE	128	330321			330264, 330544	
	V Bus (7HB, 7HJ, 7EB, 7EJ, 7EF)	05/03-	AXE	128	330321			330264, 330544	
2.5 4motion	V Box (7HA, 7HH, 7EA, 7EH)	06/06-	AXD	96	330321	330440		330264, 330544	
	V Bus (7HB, 7HJ, 7EB, 7EJ, 7EF)	06/06-	AXD	96	330321	330440		330264, 330544	
	V Box (7HA, 7HH, 7EA, 7EH)	06/06-	AXE	128	330321			330264, 330544	
	V Bus (7HB, 7HJ, 7EB, 7EJ, 7EF)	08/04-	AXE	128	330321			330264, 330544	
2.5 Syncro	IV Box (70XA)	10/92-04/03	AAF, ACU, AEN, AEU	81	330322, 330325, 330337, 330342	330440	330103, 330141, 330151, 330162, 330212, 330283, 330286, 330287, 330288, 330496	330442, 330544	
	IV Bus (70XB, 70XC, 7DB, 7DW)	11/92-04/03	AAF, ACU, AEN, AEU	81	330322, 330325, 330337, 330342	330440	330103, 330141, 330151, 330162, 330212, 330283, 330286, 330287, 330288, 330496	330442, 330544	
	IV Flatbed / Chassis (70XD)	10/92-04/03	AAF, ACU, AEN, AEU	81	330322, 330325, 330337, 330342	330440	330103, 330141, 330151, 330162, 330212, 330283, 330286, 330287, 330288, 330496	330442, 330544	

VW

OPS Oil Pressure Switches **BLS** Brake Light Switches **TT-RF** Temperature Transmitter and Radiator Fan Switches **RLS** Reverse Light Switches **VAR** Various

Vehicle		Date	Engine	kW	OPS	BLS	TT-RF	RLS	VAR
2.5 Syncro	IV Box (70XA)	08/96-04/03	AET, APL, AVT	85	330325, 330337, 330342	330440, 330706	330103, 330141, 330151, 330152, 330283, 330286, 330287, 330288, 330496	330442, 330544	
	IV Bus (70XB, 70XC, 7DB, 7DW)	07/96-04/03	AET, APL, AVT	85	330325, 330337, 330342	330440, 330706	330103, 330141, 330151, 330152, 330283, 330286, 330287, 330288, 330496	330442, 330544	
	IV Flatbed / Chassis (70XD)	08/96-04/03	AET, APL, AVT	85	330325, 330337, 330342	330440, 330706	330103, 330141, 330151, 330152, 330283, 330286, 330287, 330288, 330496	330442, 330544	
2.5 TDI	IV Box (70XA)	12/98-04/03	AJT, AYY	65	330325, 330341, 330342	330440, 330705, 330706	330141, 330151, 330283, 330287, 330288, 330496	330442, 330544	
2.5 TDI	IV Bus (70XB, 70XC, 7DB, 7DW)	05/98-04/03	AJT, AYY	65	330325, 330341, 330342	330440, 330705, 330706	330141, 330151, 330283, 330287, 330288, 330496	330442, 330544	
	IV Flatbed / Chassis (70XD)	05/98-04/03	AJT, AYY	65	330325, 330341, 330342	330440, 330705, 330706	330141, 330151, 330283, 330287, 330288, 330496	330442, 330544	
	IV Box (70XA)	09/95-04/03	ACV, AUF, AYC	75	330322, 330325, 330341, 330342	330440, 330705, 330706	330141, 330151, 330152, 330162, 330283, 330286, 330287, 330288, 330496	330442, 330544	
	IV Bus (70XB, 70XC, 7DB, 7DW)	09/95-04/03	ACV, AUF, AXL, AYC	75	330322, 330325, 330341, 330342	330440, 330705, 330706	330141, 330151, 330152, 330162, 330283, 330286, 330287, 330288, 330496	330442, 330544	
	IV Flatbed / Chassis (70XD)	09/95-04/03	ACV, AUF, AYC	75	330322, 330325, 330341, 330342	330440, 330705, 330706	330141, 330151, 330152, 330162, 330283, 330286, 330287, 330288, 330496	330442, 330544	
	V Box (7HA, 7HH, 7EA, 7EH)	04/03-11/09	AXD	96	330321	330440, 330725		330264, 330544, 330579	
	V Bus (7HB, 7HJ, 7EB, 7EJ, 7EF)	04/03-11/09	AXD	96	330321	330440, 330725		330264, 330544, 330579	
	V Flatbed / Chassis (7JD, 7JE, 7JL, 7JY, 7JZ, 7F	04/03-11/09	AXD	96	330321	330440, 330725		330264, 330544, 330579	
	IV Box (70XA)	09/00-04/03	AXG	111	330325	330440	330141, 330283, 330288	330442, 330544	
	IV Bus (70XB, 70XC, 7DB, 7DW)	05/98-04/03	AHY, AXG	111	330325, 330341, 330342	330440, 330705, 330706	330141, 330151, 330283, 330288, 330496	330442, 330544	
	V Bus (7HB, 7HJ, 7EB, 7EJ, 7EF)	11/03-11/09	BLJ	120	330321	330725		330264, 330544, 330579	
	V Box (7HA, 7HH, 7EA, 7EH)	04/03-11/09	AXE	128	330321	330725		330264, 330544, 330579	
	V Bus (7HB, 7HJ, 7EB, 7EJ, 7EF)	04/03-11/09	AXE	128	330321	330725		330264, 330544, 330579	
	V Flatbed / Chassis (7JD, 7JE, 7JL, 7JY, 7JZ, 7F	04/03-11/09	AXE	128	330321	330725		330264, 330544, 330579	

OPS Oil Pressure Switches **BLS** Brake Light Switches **TT-RF** Temperature Transmitter and Radiator Fan Switches **RLS** Reverse Light Switches **VAR** Various

ERA S.p.A. Moncalieri (TO) Italy - tel: +39 011 6891511 - fax: +39 011 6472862 - www.eranet.it

Vehicle		Date	Engine	kW	OPS	BLS	TT-RF	RLS	VAR
2.5 TDI 4motion	V Box (7HA, 7HH, 7EA, 7EH)	07/04-11/09	AXD	96	330321	330440, 330725		330264, 330544, 330579	
	V Bus (7HB, 7HJ, 7EB, 7EJ, 7EF)	07/04-11/09	AXD	96	330321	330440, 330725		330264, 330544, 330579	
	V Flatbed / Chassis (7JD, 7JE, 7JL, 7JY, 7JZ, 7F	07/04-11/09	AXD	96	330321	330440, 330725		330264, 330544, 330579	
	V Box (7HA, 7HH, 7EA, 7EH)	07/04-11/09	AXE	128	330321	330725		330264, 330544, 330579	
	V Bus (7HB, 7HJ, 7EB, 7EJ, 7EF)	07/04-11/09	AXE	128	330321	330725		330264, 330544, 330579	
	V Flatbed / Chassis (7JD, 7JE, 7JL, 7JY, 7JZ, 7F	04/04-11/09	AXE, BPC	128	330321	330725		330264, 330544, 330579	
2.5 TDi PF	V Box (7HA, 7HH, 7EA, 7EH)	06/06-	AXD	96	330321	330440		330264, 330544	
	V Bus (7HB, 7HJ, 7EB, 7EJ, 7EF)	06/06-	AXD	96	330321	330440		330264, 330544	
2.5 TDI Syncro	IV Box (70XA)	09/95-04/03	ACV, AXL	75	330322, 330325, 330341, 330342	330440, 330705, 330706	330141, 330151, 330152, 330162, 330283, 330286, 330287, 330288, 330496	330442, 330544	
	IV Bus (70XB, 70XC, 7DB, 7DW)	01/96-04/03	ACV, AXL	75	330322, 330325, 330341, 330342	330440, 330705, 330706	330141, 330151, 330152, 330162, 330283, 330286, 330287, 330288, 330496	330442, 330544	
	IV Flatbed / Chassis (70XD)	05/98-04/03	ACV, AXL	75	330322, 330325, 330341, 330342	330440, 330705, 330706	330141, 330151, 330152, 330162, 330283, 330286, 330287, 330288	330442, 330544	
2.8	IV Flatbed / Chassis (70XD)	05/96-05/00	AES	103	330322, 330324, 330342	330440	330103, 330123, 330141, 330152, 330283, 330286, 330287, 330288	330442, 330544	
2.8 Syncro	IV Bus (70XB, 70XC, 7DB, 7DW)	01/96-04/96	AES	103	330322, 330324, 330342	330440	330103, 330123, 330141, 330152, 330283, 330286, 330287, 330288	330442, 330544	
2.8 V6	IV Bus (70XB, 70XC, 7DB, 7DW)	04/00-04/03	AMV	150	330322, 330324, 330342	330440	330103, 330123, 330141, 330283, 330287, 330288, 330496	330442, 330544	
2.8 VR 6	IV Bus (70XB, 70XC, 7DB, 7DW)	11/95-04/00	AES	103	330322, 330324, 330342	330440	330103, 330123, 330141, 330152, 330283, 330286, 330287, 330288, 330496	330442, 330544	
3.2 4motion	V Box (7HA, 7HH, 7EA, 7EH)	11/03-06/06	BDL	170	330321	330725	330546	330264, 330544, 330579	
	V Bus (7HB, 7HJ, 7EB, 7EJ, 7EF)	11/03-06/06	BDL	170	330321	330725	330546	330264, 330544, 330579	
	V Flatbed / Chassis (7JD, 7JE, 7JL, 7JY, 7JZ, 7F	11/03-11/09	BDL	170	330321	330725	330546	330264, 330544, 330579	
	V Box (7HA, 7HH, 7EA, 7EH)	11/03-11/09	BKK	173	330321	330725	330546	330264, 330544, 330579	
3.2 V6	V Box (7HA, 7HH, 7EA, 7EH)	04/03-06/04	BDL	170	330321	330725	330546	330264, 330544, 330579	

OPS Oil Pressure Switches **BLS** Brake Light Switches **TT-RF** Temperature Transmitter and Radiator Fan Switches **RLS** Reverse Light Switches **VAR** Various

Vehicle		Date	Engine	kW	OPS	BLS	TT-RF	RLS	VAR
3.2 V6	V Bus (7HB, 7HJ, 7EB, 7EJ, 7EF)	02/04-06/04	BDL	170	330321	330725	330546	330264, 330544, 330579	
	V Flatbed / Chassis (7JD, 7JE, 7JL, 7JY, 7JZ, 7F	02/04-11/09	BDL	170	330321	330725	330546	330264, 330544, 330579	
	V Box (7HA, 7HH, 7EA, 7EH)	02/04-11/09	BKK	173	330321	330725	330546	330264, 330544, 330579	
	V Bus (7HB, 7HJ, 7EB, 7EJ, 7EF)	02/04-11/09	BKK	173	330321	330725	330546	330264, 330544, 330579	
	V Flatbed / Chassis (7JD, 7JE, 7JL, 7JY, 7JZ, 7F	08/03-05/06	BKK	173	330321	330725	330546	330264, 330544, 330579	
3.2 V6 4motion	V Bus (7HB, 7HJ, 7EB, 7EJ, 7EF)	11/03-11/09	BKK	173	330321	330725	330546	330264, 330544, 330579	
VENTO		**11/91 - 09/98**							
1.4	(1H2)	11/91-09/98	ABD, AEX	40	330337, 330341, 330342	330440	330123, 330281, 330282, 330287, 330296	330255, 330442	
1.4	(1H2)	11/91-09/98	ABD, AEX	44	330337, 330341, 330342	330440	330123, 330281, 330282, 330287, 330296	330255, 330442	
1.6	(1H2)	09/92-09/98	ABU, AEA, AEE	55	330004, 330322, 330337, 330341, 330342	330440	330123, 330281, 330282, 330287, 330296	330255, 330442	
	(1H2)	10/94-09/98	AEK, AFT	74	330337, 330342	330440	330123, 330281, 330282, 330287	330255, 330442	
1.8	(1H2)	11/91-09/98	AAM	55	330337, 330342	330440	330123, 330281, 330282, 330287, 330296	330442	
	(1H2)	11/91-09/98	ABS, ADZ	66	330337, 330342	330440	330103, 330123, 330163, 330281, 330282, 330287, 330296	330255, 330442	
1.9 D	(1H2)	11/91-09/98	1Y	48	330341, 330342	330440	330123, 330128, 330164, 330281, 330282, 330296	330442	
1.9 SDI	(1H2)	04/97-09/98	AEY	47	330341, 330342	330440	330123, 330281, 330282, 330286, 330287	330255, 330442	
1.9 TD	(1H2)	11/91-09/98	AAZ	55	330341, 330342	330440	330123, 330128, 330163, 330164, 330281, 330282, 330296	330442	
1.9 TDI	(1H2)	09/93-09/98	1Z, AHU, ALE	66	330341, 330342	330440, 330705	330123, 330161, 330163, 330164, 330280, 330281, 330282, 330287, 330296	330255, 330442, 330744	
2.0	(1H2)	11/91-09/98	2E, ADY, AGG, AKR	85	330337, 330342, 330370	330440	330123, 330163, 330281, 330282, 330287, 330296	330255, 330442	
2.8 VR6	(1H2)	08/95-04/96	AAA	120				330744	
	(1H2)	01/92-09/98	AAA	128	330004, 330322	330440	330123, 330151, 330163, 330164, 330281, 330282, 330286, 330296	330744	

OPS Oil Pressure Switches **BLS** Brake Light Switches **TT-RF** Temperature Transmitter and Radiator Fan Switches **RLS** Reverse Light Switches **VAR** Various

ERA S.p.A. Moncalieri (TO) Italy - tel: +39 011 6891511 - fax: +39 011 6472862 - www.eranet.it

Vehicle		Date	Engine	kW	OPS	BLS	TT-RF	RLS	VAR
ZASTAVA									
101			**06/72 - 12/93**						
1.1	(1100)	06/73-01/90	128 A.000	40	330000	330032	330082, 330291		
YUGO			**04/80 - 06/95**						
0.9		04/80-06/92	9A	33	330000	330032	330291		

ERA S.p.A. - April 2012

SCHEDE TECNICHE
TECHNICAL REPORTS

330001 - OIL PRESSURE SWITCH (1)

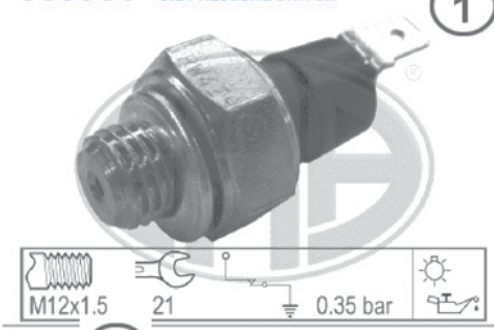

FIAT
4151243, 4151564, 4152127, 4304418, 4305685, 4431182, 4473333, 4998770, 5927407
LOMBARDINI
107 6745 050
PIAGGIO
287887
(3)

FIAT
126, 127, 500, 600, PANDA, UNO
LANCIA
A 112
SEAT
FURA, IBIZA, MARBELLA, TERRA
(4)

Note: (2)

330002 - OIL PRESSURE SWITCH

ALFA ROMEO
510621, 60504190

ALFA ROMEO
33, ALFASUD

LEGENDA

(1) Foto * Picture * Photo * Bild

(2) Note * Notes * Notes * Bemerkungen

(3) Adattabile a * Suitable to * Adaptable à * Passend für

(4) Applicazioni principali * Main Applications * Applications principales * Hauptanwendungen

ERA S.p.A. - April 2012

OIL PRESSURE SWITCHES

page
481

Oil Pressure Switch
Interruttore a Pressione Olio
Pressostat d'huile
Öldruckschalter

ERA S.p.A. - April 2012

330000 - OIL PRESSURE SWITCH

ALFA ROMEO
60593847, 60805536, 60807764
FIAT
4133922, 4249594, 4298311, 4414583, 4414599, 4422049, 4459907, 5428649, 5556508, 98469129
LADA
2101-38103-00, 2101-38106-00
VW
062 919 081

ALFA ROMEO
155, 164
FIAT
124, 126, 127, 128, 131, 132, 242-SERIE, ARGENTA, CROMA, DUCATO, DUNA, FIORINO, FIORINO Pick up, PANDA, REGATA, RITMO, TALENTO, TEMPRA, TIPO, UNO, X 1/9
FSO
126P
IVECO
DAILY I
LADA
NIVA, SAMARA
LANCIA
BETA, DEDRA, DELTA, PRISMA, THEMA, Y10
SEAT
IBIZA, MALAGA, RONDA
VW
LT 28-35, LT 28-46
ZASTAVA
101, YUGO

Note:

330001 - OIL PRESSURE SWITCH

FIAT
4151243, 4151564, 4152127, 4304418, 4305685, 4431182, 4473333, 4998770, 5927407
LOMBARDINI
107 6745 050
PIAGGIO
287887

FIAT
126, 127, 500, 600, PANDA, UNO
LANCIA
A 112
SEAT
FURA, IBIZA, MARBELLA, TERRA

Note:

330002 - OIL PRESSURE SWITCH

ALFA ROMEO
510621, 60504190

ALFA ROMEO
33, ALFASUD

Note:

330003 - OIL PRESSURE SWITCH

CITROENPEUGEOT
1131 09
RENAULT
77 00 655 787, 77 00 761 254, 77 01 348 032, 77 01 348 033, 77 01 365 429
SAAB
75 22 402, 91 09 182, 91 12 459
VOLVO
3342004-3

CITROËN
CX
PEUGEOT
505
RENAULT
11, 18, 20, 25, 4, 5, 9, ESPACE, MASTER, RAPID, SUPER 5, TRAFIC
SAAB
9-3, 90, 900, 9000
VOLVO
340-360

Note:

330004 - OIL PRESSURE SWITCH

KHD
117 8933
VOLVO
1257137
VW
021 919 081 C, 056 919 081 B, 056 919 081 C

AUDI
100, 200
SEAT
TOLEDO
VOLVO
240, 740, 760, 940, 960
VW
DERBY, PASSAT, POLO, SANTANA, SCIROCCO, VENTO

Note:

330005 - OIL PRESSURE SWITCH

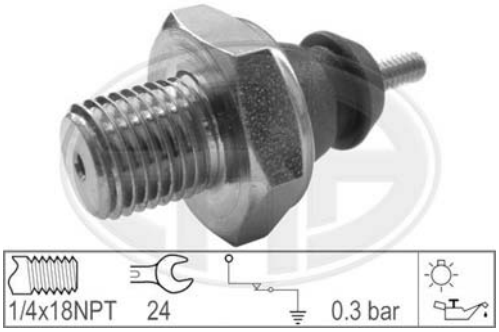

FORD
0409160, 1027970, 1066811, 1414897, 1647828, 3466716, 6080608, 6086163, 6170902, 6499475, 6513125, 6539971, 6716335, 81AB 9278 AA, 81AB 9278 BA, 86AB 9278 BA, 86AB 9278 BB
MAZDA
1 E00 18 501, 1 E00 18 501 A

FORD
CAPRI, CORTINA, ESCORT, ESCORT CLASSIC, FIESTA, FOCUS, FUSION, GALAXY, KA, MONDEO, ORION, P 100, PUMA, SCORPIO, SIERRA, TAUNUS, TRANSIT
FORD USA
EXPLORER, WINDSTAR
MAZDA
121

Note:

330006 - OIL PRESSURE SWITCH

HONDA
37240 657 003, 37240 657 013, 37240 657 305, 37240 P13 003, 37240 PA6 004, 37240 PCX 003
NISSAN
25240-T5500
SUZUKI
37820-82001
TOYOTA
83530-12040, 83530-14040, 83530-30080

ACURA
NSX
HONDA
ACCORD, JAZZ, LEGEND, NSX, PRELUDE, QUINTET
HYUNDAI
ATOS, ATOS PRIME, XG
MARUTI
800
MAZDA
626
ROVER
600, 800

Note:

330007 - OIL PRESSURE SWITCH

HONDA
37240 PD2 003, 37240 PD2 004, 37240 PLZ D00, 37240 PT0 004, 37240 PT0 014, 37240 PT0 023
ISUZU
5-86202-831-0, 8-94118-755-0, 8-94312-940-0
NISSAN
25240-89900, 25240-89901, 25240-89902, 25240-89910, 25240-D9700, 25240-Y9501, 25240-Y9700
OPEL
12 52 561, 12 52 565
ROVER
GPS128, GPS160, GPS182
SAAB
59 51 421

ACURA
INTEGRA
HONDA
ACCORD, CIVIC, CONCERTO, CR-V, CRX, HR-V, INTEGRA, LEGEND, LOGO, PRELUDE, SHUTTLE, STREAM
NISSAN
LAUREL, PRIMERA, URVAN
OPEL
ASTRA, COMBO, CORSA, FRONTERA, KADETT, MERIVA, MONTEREY, SIGNUM, VECTRA
RENAULT
VEL SATIS
ROVER
200, 400, 600, CABRIOLET
SAAB
9-5

Note:

Suitable to: Used on:

330008 - OIL PRESSURE SWITCH

DAIHATSU
83530-30060, 83530-60030, 83530-87102, 83530-87103, 83530-87201, 83530-87205, 83530-87702, 83530-87703
FIAT
553321200, 553321205, 6553306205, 6553321200, 6553321205
FORD
4132108, E53Z 9278 A, E7GZ 9278 A, XM34 9278 CA
ISUZU
9-82720-209-2
KHD
KK150 18501 C
KIA
KK150-18-501C, KK150-18-501D
MAZDA
0 866 18 501A, 2 691 18 501A, E 5D3 18 501, F EJK 18 501, KK150 18501 D, KK150-18501
OPEL
12 52 567, 94 021 127, 94 845 488, 94 847 544, 94 851 293
SUZUKI
37820-77E90
TOYOTA
83530-01040, 83530-30010, 83530-30040, 83530-30042, 83530-30050, 83530-30051, 83530-30060, 83530-36010, 83530-36011, 83530-60030, 83530-60050

DAIHATSU
APPLAUSE, CHARADE, CUORE, FEROZA Hard Top, FEROZA Soft Top, GRAN MOVE, MOVE, ROCKY Hard Top, ROCKY Soft Top, SIRION, TERIOS, YRV
FORD
RANGER
KIA
BESTA, PRIDE, RETONA, SPORTAGE
MAZDA
121, 323, 323 P, 323 S, 626, 929, E-SERIE
OPEL
CAMPO, MONTEREY
SUZUKI
GRAND VITARA, VITARA
TOYOTA
CARINA, CELICA, COROLLA, HIACE, HILUX, LAND CRUISER, LAND CRUISER 80, LITEACE
VW
TARO

Note:

330009 - OIL PRESSURE SWITCH

DAEWOO
37830A82010
DAIHATSU
83530-14030, 83530-87705
FORD
3024539, 3600688, E9BZ-9278-A
GENERAL MOTORS
10 179 510
HONDA
37240 634 671
HYUNDAI
94750-11010, 94750-11102, 94750-11110, 94750-21000, 94750-21010, 94750-21020, 94750-21030
MAZDA
1 345 18 501, B 366 18 501, B 367 18 501
MITSUBISHI
MD001482, MD001483, MD017430, MD021566, MD021567, MD138993
NISSAN
25240-89911
OPEL
91 112 377
SUZUKI
37820-73000, 37820-79600, 37820-82000
TOYOTA
83530-10010, 83530-10020, 83530-12010, 83530-12020, 83530-14010, 83530-14030, 83530-28030, 83530-30030

ACURA
INTEGRA
CHEVROLET
AVEO, KALOS, MATIZ
DAEWOO
KALOS, MATIZ
DAIHATSU
CHARADE
FORD
RANGER
HYUNDAI
ACCENT, ATOS, ATOS PRIME, COUPE, ELANTRA, GALLOPER, GETZ, H-1, H100, i30, LANTRA, MATRIX, PONY, PONY/EXCEL, S COUPE, SANTA Fx83 , SANTAMO, SONATA, STAREX, STELLAR, TERRACAN, TRAJET, TUCSON, XG
KIA
CARENS, CARNIVAL, CERATO, JOICE, K2500, K2700, MAGENTIS, PREGIO, RIO, SORENTO, SPORTAGE
MAZDA
121, 2, 3, 323, 323 C, 323 F, 323 P, 323 S, 5, 6, 626, B-SERIE, BT-50, DEMIO, MPV, MX-3, MX-5, MX-6, PREMACY, XEDOS 6, XEDOS 9
MITSUBISHI
COLT, LANCER, PAJERO, SPACE WAGON
OPEL
AGILA
SUZUKI
ALTO, BALENO, CARRY, GRAND VITARA, IGNIS, JIMNY, LIANA, SAMURAI, SJ 410, SJ 413, SUPER CARRY, SWIFT, SX4, VITARA, WAGON R, WAGON R+, X-90
TOYOTA
CAMRY, COROLLA, HIACE, HILUX, LAND CRUISER, LITEACE, MODELL F, STARLET
VW
TARO

Note:

330010 - OIL PRESSURE SWITCH

CITROENPEUGEOT
1131 14, 1131 45, 91 040 130, 91 521 113, 91 521 114
FORD
1646357, 86GB9278AB
ROVER
GPS 138, NUC 10008

CITROËN
AX, BERLINGO, BX, C15, SAXO, XM, XSARA, XSARA PICASSO, ZX
FORD
SCORPIO
PEUGEOT
106, 205, 206, 305, 306, 309, 405, 505, 604, 605, PARTNER
ROVER
200, 400

Note:

330011 - OIL PRESSURE SWITCH

OPEL
08 954 566, 12 52 506
PORSCHE
986 606 203 00

OPEL
ASCONA, CORSA, KADETT, MANTA, OMEGA, SENATOR
PORSCHE
BOXSTER, CAYMAN

Note:

330012 - OIL PRESSURE SWITCH

BMW
1 354 273, 61 31 1 243 414, 61 31 1 354 272, 61 31 1 354 274
MERCEDES-BENZ
004 545 26 14
VW
00A 919 081

BMW
3, 5, 7
MERCEDES-BENZ
G-CLASS, SPRINTER, SPRINTER 2-t, SPRINTER 3-t, V-CLASS, VITO
PUCH
G-MODELL
SMART
CABRIO, CITY-COUPE
VW
LT 28-35, LT 28-46

Note:

330013 - OIL PRESSURE SWITCH

FIAT
33331115, 633331115
JAGUAR
C42200
LAND ROVER
RTC3651
ROVER
GPS101, GPS126, GPS131, GPS133
SAAB
8350571

AUSTIN
MONTEGO
ROVER
800, MAESTRO, MINI, MONTEGO

Note:

330014 - OIL PRESSURE SWITCH

FORD
6090246, 6163243, 6703036, 92VB 9278 AA

FORD
TRANSIT, TRANSIT TOURNEO

Note:

330015 - OIL PRESSURE SWITCH

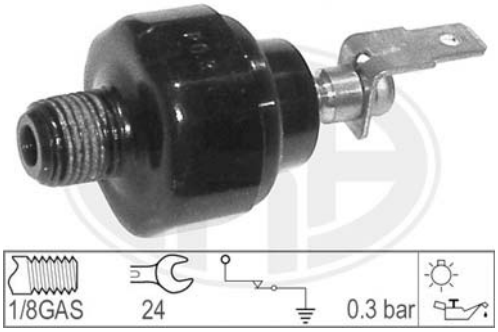

KIA
0K900-18-501C, 0K901-18-501
MAZDA
F S11 18 501 A, F S11 18 50X, J E48 18 501 A
MITSUBISHI
MD355645
SUBARU
25240-KA020, 25240-KA040, 25240-KA080
TOYOTA
83530-02030, 83530-12040, 83530-14020, 83530-14040, 83530-14050, 83530-30080, 83530-60040

FIAT
SEDICI
KIA
AVELLA, CARENS, CARNIVAL, CLARUS, K2700, PREGIO, RETONA, RIO, SEPHIA, SHUMA, SPORTAGE
LEXUS
ES, LS
MAZDA
626, MX-3, MX-6, XEDOS 6, XEDOS 9
MITSUBISHI
3000 GT, CARISMA, COLT, ECLIPSE, GALANT, GRANDIS, L 200, L 300, L 400, LANCER, OUTLANDER, PAJERO, PAJERO CLASSIC, PAJERO SPORT, SPACE GEAR, SPACE RUNNER, SPACE STAR
SUBARU
FORESTER, IMPREZA, LEGACY
TOYOTA
CAMRY, CARINA, CELICA, COROLLA, HIACE, LITEACE, MR 2, PREVIA, STARLET, TERCEL

Note:

330016 - OIL PRESSURE SWITCH

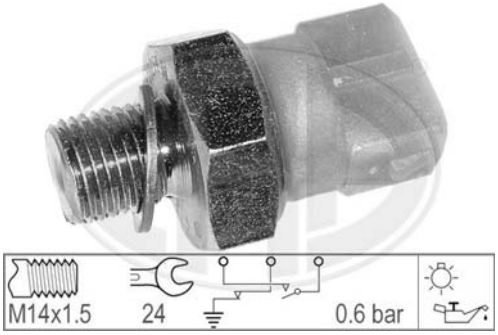

OPEL
12 52 560, 90 240 259

OPEL
ASCONA, CORSA, VECTRA

Note:

330017 - OIL PRESSURE SWITCH

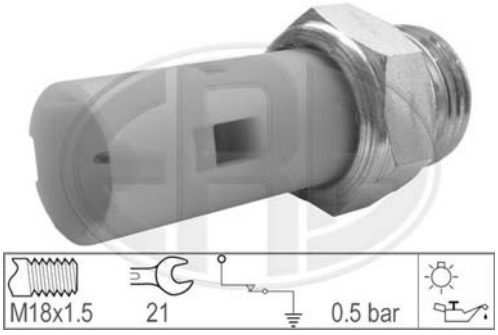

RENAULT
60 01 055 056, 77 00 771 828
VOLVO
3343237-8

RENAULT
21, 25, CLIO, ESPACE, LAGUNA, SAFRANE
VOLVO
440, 460, 480, S40, V40

Note:

330018 - OIL PRESSURE SWITCH

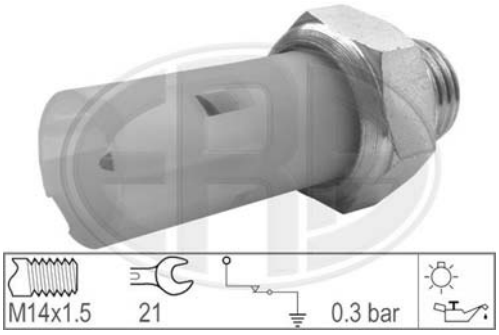

MITSUBISHI
M882369
OPEL
09 110 231, 44 02 231
RENAULT
77 00 771 825, 77 00 777 660, 77 01 039 667, 82 00 671 285
VOLVO
30882369, 3343427-5

MITSUBISHI
CARISMA, SPACE STAR
NISSAN
INTERSTAR, KUBISTAR, PRIMASTAR
OPEL
ARENA, MOVANO
RENAULT
19, 21, 25, CLIO, ESPACE, KANGOO, LAGUNA, MASTER, MEGANE, RAPID, SAFRANE, SUPER 5, TRAFIC, TWINGO
VOLVO
440, 460, 480, S40, V40

Note:

330019 - OIL PRESSURE SWITCH

HONDA
37240 P5T G00
LAND ROVER
NUC 10003
ROVER
GPS 135

HONDA
ACCORD
LAND ROVER
DEFENDER, DISCOVERY, FREELANDER
MG
MG TF, MG ZR, MGF
ROVER
100, 100 (METRO), 200, 25, 400, 45, 600, 800, CABRIOLET, COUPE, MINI

Note:

330020 - OIL PRESSURE SWITCH

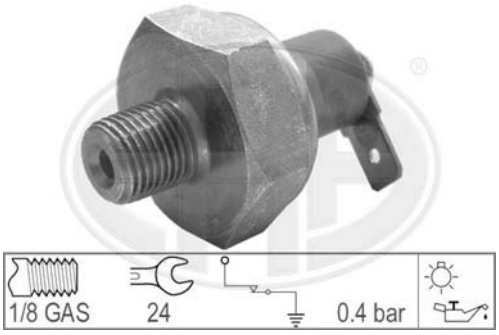

HYUNDAI
94750-31000, 94750-35010, 94750-35020, 94750-35030
MITSUBISHI
MD138994

MITSUBISHI
CARISMA, COLT, GALANT, GRANDIS, L 200, LANCER, PAJERO PININ, SPACE RUNNER, SPACE STAR, SPACE WAGON

Note:

330021 - OIL PRESSURE SWITCH

MITSUBISHI
M851148
RENAULT
77 00 834 918, 77 00 845 214

MITSUBISHI
CARISMA
RENAULT
19, 21, CLIO, ESPACE, KANGOO, LAGUNA, MEGANE, RAPID, SUPER 5, TRAFIC

Note:

330022 - OIL PRESSURE SWITCH

CITROENPEUGEOT
1131 J1
HONDA
37240 PHM 003
TOYOTA
83530-05010, 83530-14060, 83530-14070, 83530-28010, 83530-28020, 83530-30090, 83530-30100, 83530-60010, 83530-60020, 83530-AA011

CITROËN
C1
HOLDEN
APOLLO
HONDA
INSIGHT, JAZZ
LEXUS
ES, GS, IS, LS, RX
MAZDA
RX 8
MINI
MINI
PEUGEOT
107
TOYOTA
4 RUNNER, AVENSIS, AVENSIS VERSO, AYGO, CAMRY, CARINA, CELICA, COROLLA, HIACE, HILUX, LAND CRUISER, LAND CRUISER 90, LITEACE, MR 2, PASEO, PICNIC, PREVIA, PRIUS, RAV 4, STARLET, SUPRA, YARIS, YARIS VERSO
VOLVO S40, S80, V40, XC 90
VW TARO

Note: Number of ports : 1

330023 - OIL PRESSURE SWITCH

CITROENPEUGEOT
1131 61, 1131 82, 96 026 617
FIAT
9618305780
HYUNDAI
94750-29000
NISSAN
25240-6F900
SUZUKI
16582-66G00, 37820-86CA0

CITROËN
AX, BERLINGO, EVASION, JUMPER, JUMPY, SAXO, XANTIA, XM, XSARA, ZX
FIAT
DUCATO, SCUDO, ULYSSE
HYUNDAI
LANTRA
LANCIA
ZETA
NISSAN
MICRA
PEUGEOT
106, 306, 405, 406, 605, 806, BOXER, EXPERT, PARTNER
RENAULT LAGUNA
ROVER 100 (METRO)
SUZUKI BALENO, SAMURAI, VITARA

Note:

330024 - OIL PRESSURE SWITCH

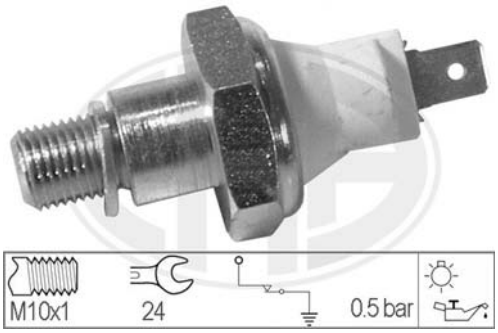

CHRYSLER
47 20 599
FORD
7072644
LAND ROVER
PRC 6387, PRC4044

FORD
SCORPIO
LAND ROVER
90/110, DEFENDER, DISCOVERY, RANGE ROVER

Note:

330025 - OIL PRESSURE SWITCH

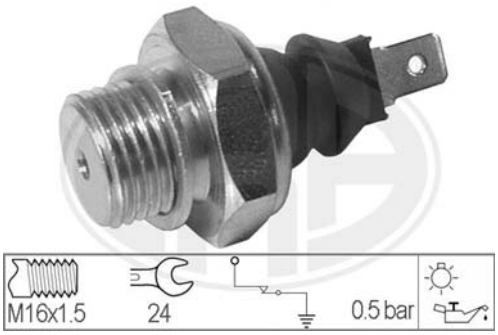

VW
047 919 081, 115 094 201, 115 094 202

SKODA
105,120, FAVORIT, FELICIA

Note:

Used on: Suitable to:

330026 - OIL PRESSURE SWITCH

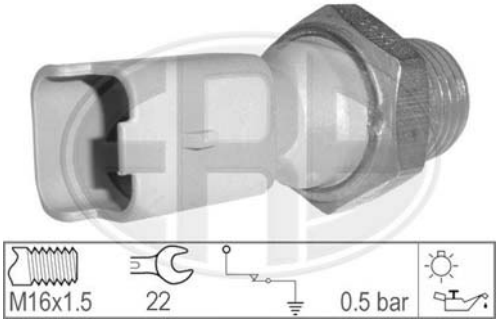

CITROENPEUGEOT
1131 C5, 1131 K5, 9661477580
FIAT
9631846480
FORD
1486742, 2S6Q 9278 AA, 2S6Q 9278 AB
NISSAN
25240-6F901
TOYOTA
83530 02040

CITROËN
BERLINGO, C-CROSSER, C1, C15, C2, C3, C4, C4 Grand Picasso, C4 Picasso, C5, C6, C8, EVASION, JUMPER, JUMPY, NEMO, SAXO, XANTIA, XM, XSARA, XSARA PICASSO
FIAT
DUCATO, SCUDO, ULYSSE
FORD
C-MAX, FIESTA, FOCUS, FOCUS C-MAX, FUSION, GALAXY, KUGA, MONDEO, S-MAX
LANCIA
PHEDRA, ZETA
MAZDA
2, 3
MINI
MINI
NISSAN
MICRA
PEUGEOT
1007, 106, 107, 206, 207, 207 CC, 207 SW, 306, 307, 308, 308 SW, 4007, 406, 407, 607, 806, 807, BIPPER, BOXER, EXPERT, EXPERT Tepee, PARTNER, PARTNER Tepee
RENAULT
ESPACE, LAGUNA
SUZUKI
GRAND VITARA, LIANA
TOYOTA
AYGO, COROLLA
VOLVO
C30, C70, S40, S80, V50, V70, XC70

Note: Number of ports : 1

330027 - OIL PRESSURE SWITCH

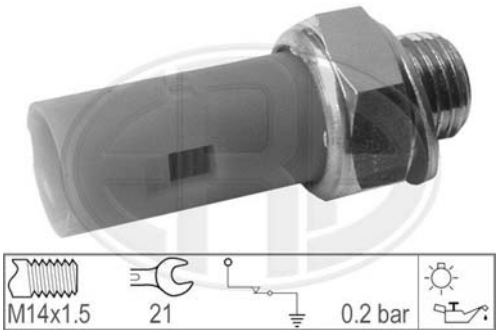

NISSAN
25240-00QAA, 25240-00QAD, 25240-BN700
OPEL
44 00 194, 91 08 194
RENAULT
77 00 417 970, 82 00 671 286

NISSAN
ALMERA, KUBISTAR, MICRA
OPEL
ARENA, MOVANO, VIVARO
RENAULT
CLIO, ESPACE, KANGOO, LAGUNA, MASTER, MEGANE, RAPID, SCENIC, TRAFIC, TRAFIC II

Note:

330028 - OIL PRESSURE SWITCH

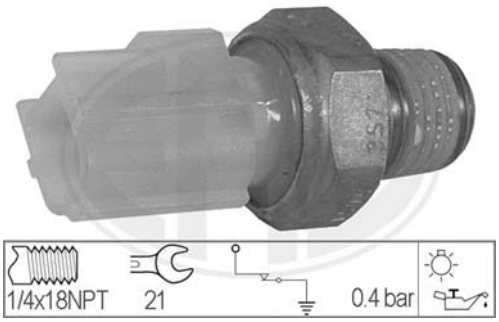

CITROENPEUGEOT
1131 J2
FIAT
9659173880
FORD
1053881, 1053882, 1084764, 1095149, 1309298, 1363198, 3S71 9278 AB, 98AB 9278 AA, 98AB 9278 CA
MAZDA
Y F09 18 501

CITROËN
JUMPER
FORD
COUGAR, ESCORT, ESCORT CLASSIC, FIESTA, FOCUS, FUSION, KA, MAVERICK, MONDEO, STREET KA, TOURNEO CONNECT, TRANSIT, TRANSIT CONNECT, TRANSIT TOURNEO
MAZDA
TRIBUTE
PEUGEOT
BOXER

Note:

	Suitable to:	Used on:
330029 - OIL PRESSURE SWITCH 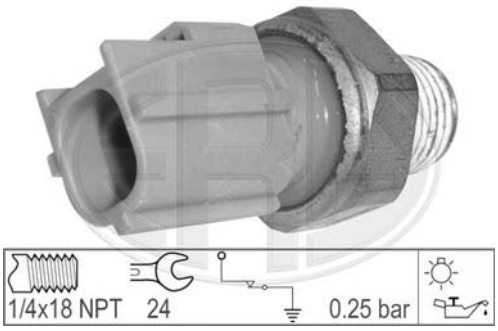	**FORD** 1116647, 1226188, 1363512, 1S7A 9278 AA, 3M51 9278 AA, 3M51 9278 AB	**FORD** C-MAX, FIESTA, FOCUS, FOCUS C-MAX, GALAXY, MAVERICK, MONDEO, S-MAX, TOURNEO CONNECT, TRANSIT, TRANSIT CONNECT **MAZDA** 3, 5, 6, CX-7, MPV, MX-5, TRIBUTE **VOLVO** C30, S40, S80, V50, V70
Note:		
330030 - OIL PRESSURE SWITCH	**FORD** 1096320, 98AB 9278 BA	**FORD** TRANSIT
Note:		
330317 - OIL PRESSURE SWITCH 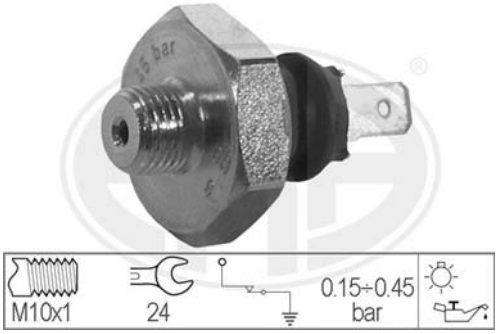	**ALFA ROMEO** 60506902 **BMW** 61 31 1 351 799 **ROVER** GPS137 **VW** 021 919 081, 021 919 081 A, 021 919 081 B	**ALFA ROMEO** 155, 164, 166, 33, 75, 90, ALFETTA, GIULIETTA, GTV, SPIDER, SZ **ROVER** 800
Note:		
330318 - OIL PRESSURE SWITCH	**FORD** 1094738, 95VW 9278 DA **VW** 028 919 081 E, 028 919 081 G, 028 919 081 J	**AUDI** CABRIOLET **FORD** GALAXY **SEAT** ALHAMBRA, CORDOBA, IBIZA, INCA, LEON **VW** BORA, CADDY, GOLF, LT 28-35, LT 28-46, NEW BEETLE, POLO, SHARAN, TRANSPORTER
Note:		

330319 - OIL PRESSURE SWITCH

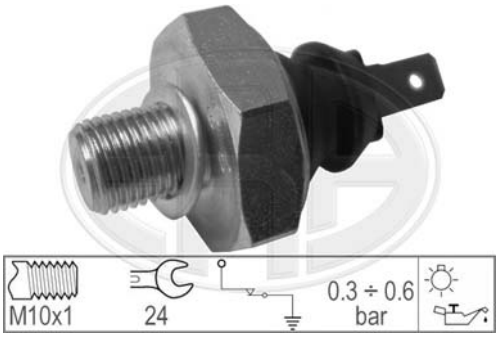

VW
030 919 081 B

SEAT
AROSA
SKODA
OCTAVIA
VW
GOLF, LUPO, POLO

Note:

330320 - OIL PRESSURE SWITCH

VW
036 919 081 A, 036 919 081 B, 036 919 081 C, 06A 919 081 C

AUDI
A2, A3
SEAT
ALTEA, ALTEA XL, AROSA, CORDOBA, IBIZA, INCA, LEON, TOLEDO
SKODA
FABIA, OCTAVIA, ROOMSTER, ROOMSTER Praktik, SUPERB
VW
BORA, CADDY, EOS, FOX, GOLF, JETTA, LUPO, NEW BEETLE, PASSAT, POLO, SCIROCCO, SPACEFOX, TIGUAN, TOURAN

Note:

330321 - OIL PRESSURE SWITCH

VW
038 919 081 B, 038 919 081 F, 06A 919 081

AUDI
A3, A4, A5, A6, A8, ALLROAD, CABRIOLET, Q7, TT
FORD
GALAXY
SEAT
CORDOBA, IBIZA, INCA, TOLEDO
SKODA
SUPERB
VW
BORA, CADDY, EOS, GOLF, MULTIVAN, PASSAT, PHAETON, POLO, SHARAN, TOUAREG, TRANSPORTER

Note:

330322 - OIL PRESSURE SWITCH

FORD
1669989, 95VW 9278 CA
MERCEDES-BENZ
013 542 05 17
VW
068 919 081

AUDI
100, 80, 90, A3, A4, A6, CABRIOLET
FORD
GALAXY
MERCEDES-BENZ
V-CLASS
SEAT
CORDOBA, IBIZA, TOLEDO
SKODA
OCTAVIA
VW
CADDY, CORRADO, DERBY, GOLF, JETTA, LT 28-35, LT 40-55, PASSAT, POLO, SANTANA, SHARAN, TRANSPORTER, VENTO

Note:

330323 - OIL PRESSURE SWITCH

VW
171919829A

VW
GOLF, JETTA, SANTANA, SCIROCCO

Note:

330324 - OIL PRESSURE SWITCH

FORD
1094739, 95VW 9278 EA
VW
06A 919 081 A, 06A 919 081 D, 06A 919 081 E, 06A 919 081 J

AUDI
A3, A4, A6, A6 Allroad, A8, ALLROAD, CABRIOLET, Q7, TT
FORD
GALAXY
PORSCHE
CAYENNE
SEAT
ALHAMBRA, ALTEA, ALTEA XL, CORDOBA, IBIZA, LEON, TOLEDO
SKODA
FABIA, OCTAVIA, SUPERB
VW
BORA, CADDY, GOLF, JETTA, NEW BEETLE, PASSAT, PASSAT CC, PHAETON, POLO, SCIROCCO, SHARAN, TIGUAN, TOUAREG, TOURAN, TRANSPORTER

Note:

330325 - OIL PRESSURE SWITCH

VW
038 919 081, 038 919 081 C, 038 919 081 D

AUDI
A2, A3, A4, A5, A6, TT
FORD
GALAXY
MITSUBISHI
GRANDIS, OUTLANDER
PORSCHE
CAYENNE
SEAT
ALHAMBRA, ALTEA, ALTEA XL, AROSA, CORDOBA, IBIZA, INCA, LEON, TOLEDO
SKODA
FABIA, OCTAVIA, ROOMSTER, ROOMSTER Praktik, SUPERB
VW
BORA, CADDY, CRAFTER 30-35, CRAFTER 30-50, EOS, FOX, GOLF, JETTA, LUPO, MULTIVAN, NEW BEETLE, PASSAT, PASSAT CC, POLO, SCIROCCO, SHARAN, TIGUAN, TOUAREG, TOURAN, TRANSPORTER

Note:

330326 - OIL PRESSURE SWITCH

VW
037 919 081 B, 037 919 081 C, 037 919 081 E, 06A 919 081 B

AUDI
CABRIOLET
SEAT
ALHAMBRA, CORDOBA, IBIZA
VW
GOLF, POLO, SHARAN, TRANSPORTER

Note: Number of ports : 1

Used on: Suitable to:

330337 - OIL PRESSURE SWITCH

VW
056 919 081 E

AUDI
100, 200, 80, 90, A4, A6, A8, CABRIOLET, COUPE
SEAT
ALHAMBRA, CORDOBA, IBIZA, TOLEDO
VW
CADDY, CORRADO, DERBY, GOLF, JETTA, LT 28-35, LT 40-55, PASSAT, POLO, POLO PLAYA, SANTANA, SCIROCCO, SHARAN, TRANSPORTER, VENTO

Note:

330340 - OIL PRESSURE SWITCH

CITROENPEUGEOT
1131 98, 1131 C7
FIAT
50008757, 55202374, 60593844, 60807244, 60808371, 7681395, 7705830, 7706596
FORD
1535416, 9S51 9278 AA
IVECO
4859914
OPEL
55 202 374

MITSUBISHI
CARISMA, SPACE STAR
NISSAN
INTERSTAR, KUBISTAR, PRIMASTAR
OPEL
MOVANO, VIVARO
RENAULT
19, 21, AVANTIME, CLIO, ESPACE, KANGOO, LAGUNA, MASTER, MEGANE, MODUS, RAPID, SAFRANE, SCENIC, SUPER 5, TRAFIC II, TWINGO
VOLVO
440, 460, 480, S40, V40

Note:

330341 - OIL PRESSURE SWITCH

FORD
1669964, 95VW 9278 CA
VW
038 919 081 A, 068 919 081 A

AUDI
100, 80, 90, A3, A4, A6, CABRIOLET
FORD
GALAXY
SEAT
ALHAMBRA, CORDOBA, IBIZA, TOLEDO
SKODA
OCTAVIA
VW
CADDY, CORRADO, GOLF, JETTA, NEW BEETLE, PASSAT, POLO, SHARAN, TRANSPORTER, VENTO

Note:

330342 - OIL PRESSURE SWITCH

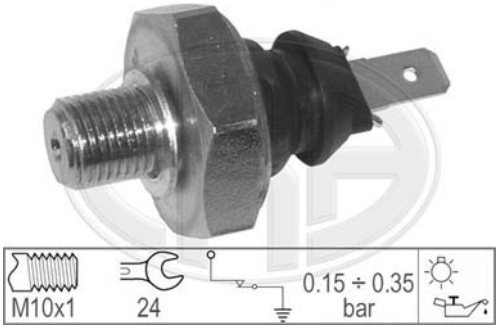

FORD
1669963, 95VW 9278 BA
MERCEDES-BENZ
013 542 06 17
VOLVO
9186134
VW
028 919 081 D

AUDI
100, 80, 90, A4, A6, A8, CABRIOLET, COUPE, V8
FORD
GALAXY
MERCEDES-BENZ
V-CLASS
SEAT
ALHAMBRA, CORDOBA, IBIZA, INCA, TOLEDO
SKODA
FELICIA
VOLVO
850, S70, S80, V70
VW
CADDY, CORRADO, GOLF, JETTA, LT 28-35, LT 28-46, LT 40-55, PASSAT, POLO, POLO PLAYA, SCIROCCO, SHARAN, TRANSPORTER, VENTO

Note:

330344 - OIL PRESSURE SWITCH

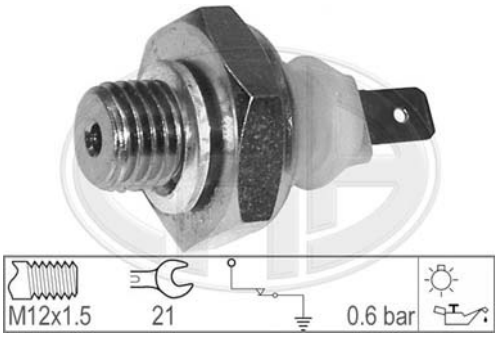

CITROENPEUGEOT
1131 44, 91 521 111
FIAT
4151246
SAME
2 7099 360 0

CITROËN
C15
PEUGEOT
205, 309

Note:

330345 - OIL PRESSURE SWITCH

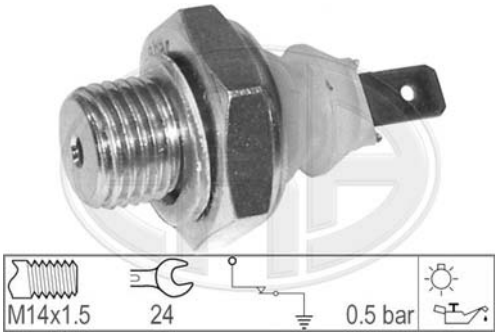

CITROENPEUGEOT
54 646 65, 54 908 01, 95 495 159
FIAT
5495159

CITROËN
CX
FIAT
DUCATO

Note:

330348 - OIL PRESSURE SWITCH

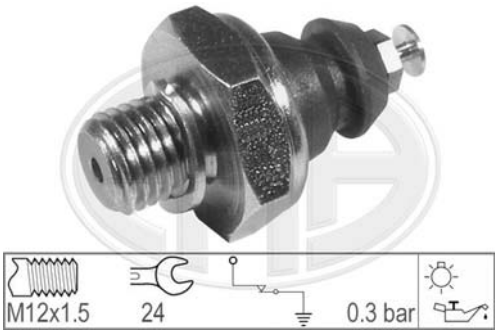

BMW
12 61 1 277 642, 61 31 1 243 414, 61 31 1 354 272, 61 31 1 354 274

BMW
3, 5

Note:

330349 - OIL PRESSURE SWITCH

BMW
12 61 1 277 591

BMW
3, 5

Note:

330350 - OIL PRESSURE SWITCH

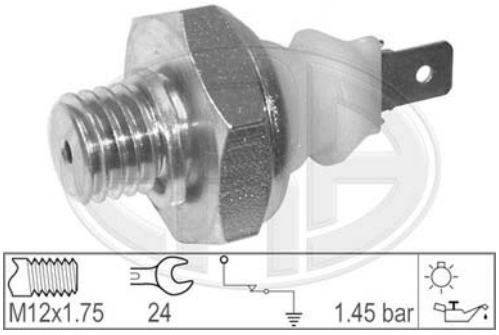

SAME
2 7099 400 10, FM 11717

TRACTORS

Note:

330351 - OIL PRESSURE SWITCH

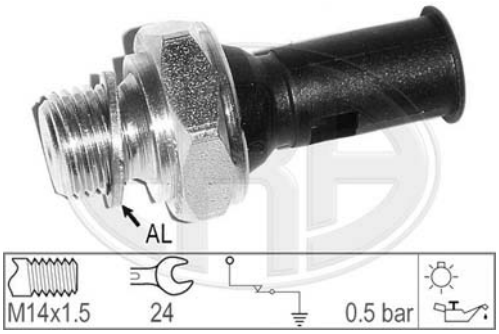

FORD
1371947, 6M5G 9278 AA
VOLVO
1347003, 1347003-4, 272484, 3545316-6, 3545696-1

FORD
FOCUS
VOLVO
240, 340-360, 740, 760, 850, 940, 960, C30, C70, S40, S60, S70, S80, S90, V40, V50, V70, V90, XC 90, XC70, XC70 CROSS COUNTRY

Note:

330352 - OIL PRESSURE SWITCH

MASSEY FERGUSON
1877721 M92
VOLVO
1266085, 1266085-8, 1324750, 1324750-7, 1606877, 1606877-7

VOLVO
240, 760

Note:

330354 - OIL PRESSURE SWITCH

KHD
1179547

TRACTORS

Note:

330355 - OIL PRESSURE SWITCH

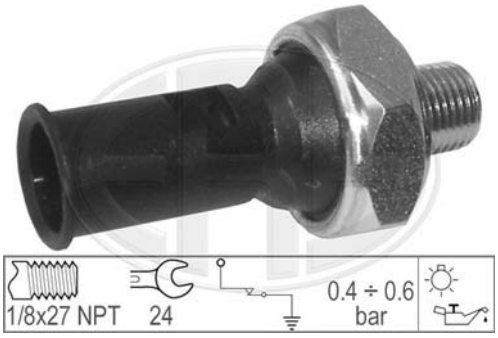

VOLVO
1609395

VOLVO
B 12, F 10, F 12, F 16, FL 4, FL 6, N 10

Note:

330356 - OIL PRESSURE SWITCH

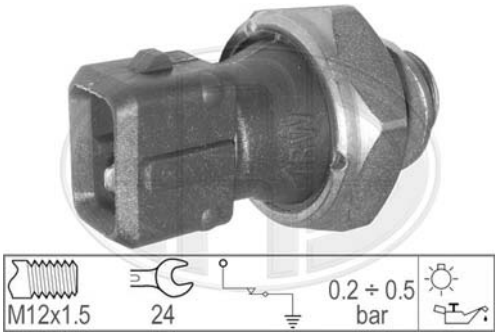

BMW
12 61 1 710 509, 12 61 1 730 160, 756848001
HONDA
37240 P5T G01
LAND ROVER
NUC000040, NUC100280L, STC2252
OPEL
12 52 552, 12 52 569
ROVER
NUC100350

BMW
1, 3, 5, 6, 7, 8, X3, X5, Z1, Z3, Z4, Z8
HONDA
ACCORD
LAND ROVER
DEFENDER, DISCOVERY, FREELANDER, RANGE ROVER
MG
MG TF, MG ZR, MG ZS, MG ZT, MG ZT-T, MGF
OPEL
OMEGA
ROVER
200, 25, 400, 45, 75

Note:

330358 - OIL PRESSURE SWITCH

PORSCHE
911 606 230 00, 911 613 571 01

PORSCHE
911, 914

Note:

330359 - OIL PRESSURE SWITCH

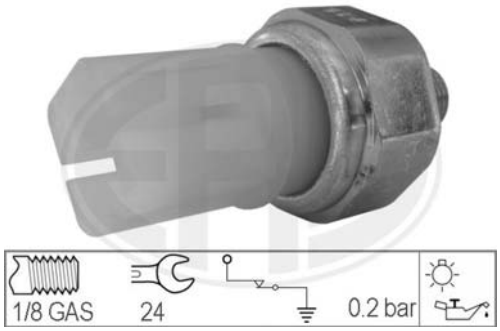

FORD
1953653, 1953654
NISSAN
25240-70J00, 25240-89915, 25240-89920, 25240-89960, 25240-G2400
SUBARU
25240-89915, 25240-89920, 25240-89960

FORD
MAVERICK
INFINITI
G20, J30, M30, Q45
NISSAN
100 NX, 200 SX, ALMERA, ALMERA TINO, BLUEBIRD, CABSTAR, MAXIMA, MAXIMA QX, MICRA, MICRA C+C, MURANO, NAVARA, NOTE, PATHFINDER, PATROL GR, PICK UP, PRAIRIE PRO, PRIMERA, QASHQAI, SERENA, SUNNY, TERRANO, VANETTE
RENAULT
ESPACE, VEL SATIS

Note:

Used on: Suitable to:

330360 - OIL PRESSURE SWITCH

ISUZU
8-90336-039-0
OPEL
12 52 566, 90 337 836

OPEL
OMEGA

Note:

330361 - OIL PRESSURE SWITCH

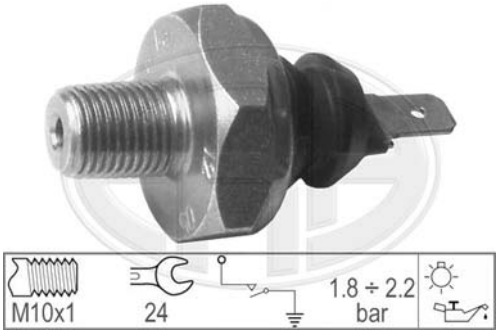

Note:

330362 - OIL PRESSURE SWITCH

MAN
51 27430 00 07

MAN
STEYR

Note:

330363 - OIL PRESSURE SWITCH

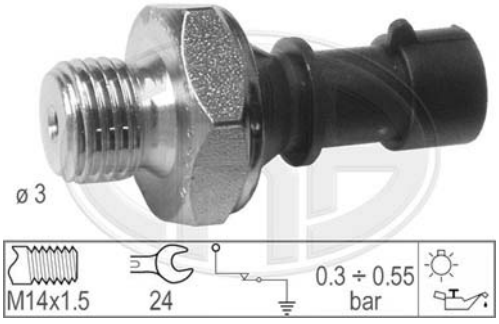

OPEL
12 52 570, 90 507 539

OPEL
ASTRA, ASTRA F CLASSIC, CALIBRA, COMBO, CORSA, FRONTERA, KADETT, MERIVA, OMEGA, SENATOR, SIGNUM, SINTRA, SPEEDSTER, TIGRA, VECTRA, ZAFIRA
VAUXHALL
ASTRA, ASTRAVAN, CALIBRA, CAVALIER, CORSA, CORSAVAN, FRONTERA, MERIVA, NOVA, VECTRA

Note: Number of ports : 1

330364 - OIL PRESSURE SWITCH

OPEL
12 52 562, 90 336 039

CHEVROLET
AVEO, EPICA, EVANDA, KALOS, LACETTI, NUBIRA, REZZO
DAEWOO
EVANDA, KALOS, LACETTI, LANOS, LEGANZA, NUBIRA, REZZO
HOLDEN
ASTRA, BARINA
OPEL
ANTARA, ASTRA, ASTRA F CLASSIC, CALIBRA, COMBO, CORSA, FRONTERA, KADETT, MERIVA, OMEGA, SENATOR, SIGNUM, SINTRA, SPEEDSTER, TIGRA, VECTRA, ZAFIRA
SAAB
9-3, 9-5, 900, 9000

Note:

330365 - OIL PRESSURE SWITCH

OPEL
12 52 572, 90 569 684
SAAB
90569684
VAUXHALL
90569684

OPEL
ASTRA, FRONTERA, OMEGA, SIGNUM, SINTRA, VECTRA, ZAFIRA
SAAB
9-3

Note: Number of ports : 1

330366 - OIL PRESSURE SWITCH

FIAT
55354325
OPEL
12 52 555, 12 52 573, 55 354 325, 90 534 902

OPEL
AGILA, ASTRA, COMBO, CORSA, MERIVA, SIGNUM, VECTRA, ZAFIRA

Note:

330367 - OIL PRESSURE SWITCH

VW
047 919 081 A

SEAT
AROSA
SKODA
OCTAVIA
VW
LUPO

Note:

Used on:	Suitable to:	
330368 - OIL PRESSURE SWITCH 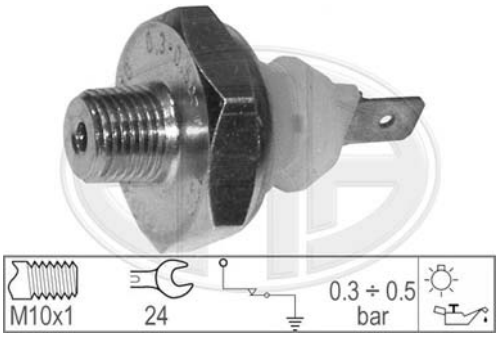	**VW** 028 919 081 A, 110 094 203, 115 094 200	**VW** GOLF, PASSAT, SANTANA, SCIROCCO, TRANSPORTER
Note:		
330370 - OIL PRESSURE SWITCH 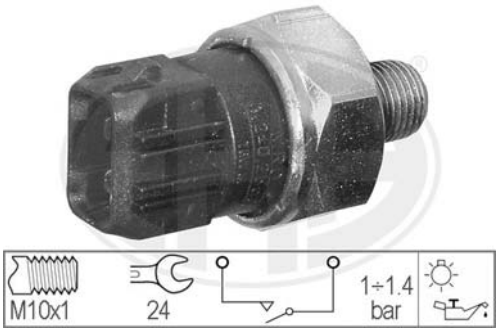	**VW** 357 919 081	**SEAT** CORDOBA, IBIZA, TOLEDO **VW** CORRADO, GOLF, PASSAT, VENTO
Note:		
330535 - OIL PRESSURE SWITCH	**ALFA ROMEO** 60513055	**ALFA ROMEO** 155, 164
Note:		
330537 - OIL PRESSURE SWITCH 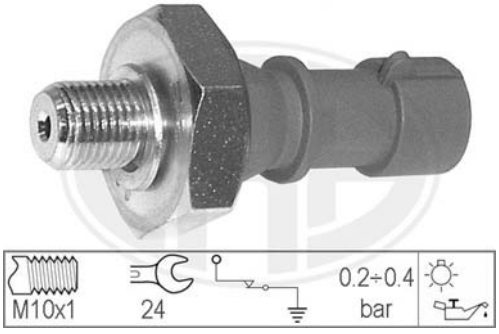	**OPEL** 24 461 314, 62 40 261	**OPEL** ASTRA
Note:		

330538 - OIL PRESSURE SWITCH

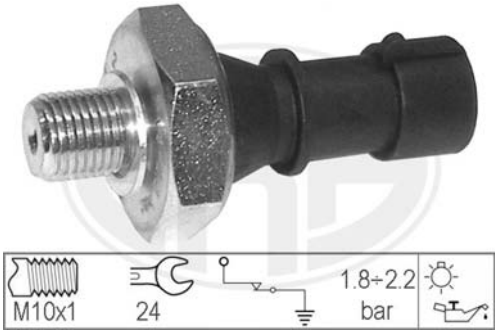

OPEL
24 461 315, 62 40 262

OPEL
ASTRA

Note:

330539 - OIL PRESSURE SWITCH

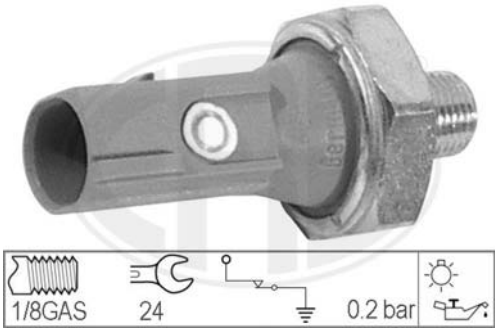

MITSUBISHI
MN163743

MITSUBISHI
COLT, GRANDIS, OUTLANDER, PAJERO, PAJERO CLASSIC
PEUGEOT
4007

Note:

330541 - OIL PRESSURE SWITCH

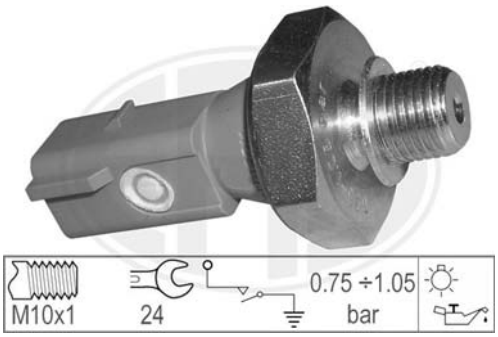

VW
038 919 081 G

AUDI
A3, A4, A5, A6, A6 Allroad, A8, Q7, TT
SKODA
SUPERB
VW
PASSAT, PASSAT CC

Note:

330564 - OIL PRESSURE SWITCH

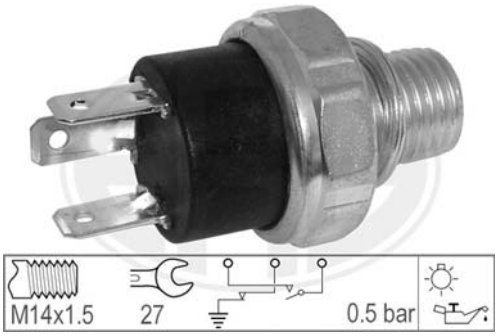

DAEWOO
25 036 834

DAEWOO
ESPERO, LEMANS, NEXIA

Note: Number of ports : 3

Used on: Suitable to:

330566 - OIL PRESSURE SWITCH

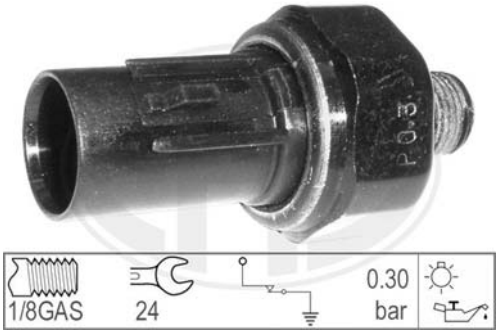

GENERAL MOTORS
10 106 210
HYUNDAI
94750-37000
KIA
94750 37000

HYUNDAI
ACCENT, ATOS, ATOS PRIME, COUPE, ELANTRA, GETZ, H-1, H100, MATRIX, SANTA Fx83 , SONATA, TERRACAN, TRAJET, TUCSON, XG

Note: Number of ports : 1

330567 - OIL PRESSURE SWITCH

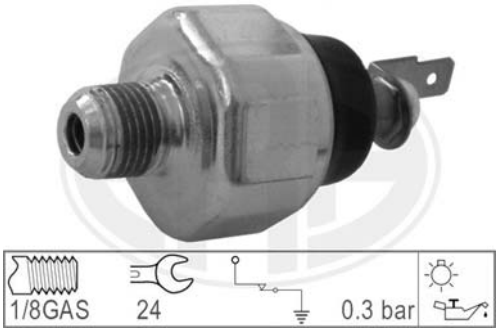

CHEVROLET
96 408 134
DAEWOO
96 408 134

CHEVROLET
AVEO, KALOS, MATIZ
DAEWOO
KALOS, MATIZ
DAIHATSU
CHARADE
FORD
RANGER
HYUNDAI
ACCENT, ATOS, ATOS PRIME, COUPE, ELANTRA, GALLOPER, GETZ, H-1, H100, i30, LANTRA, MATRIX, PONY, PONY/EXCEL, S COUPE, SANTA FE' , SANTAMO, SONATA, STAREX, STELLAR, TERRACAN, TRAJET, TUCSON, XG
KIA
CARENS, CARNIVAL, CERATO, JOICE, K2500, K2700, MAGENTIS, PREGIO, RIO, SORENTO, SPORTAGE
MAZDA
121, 2, 3, 323, 323 C, 323 F, 323 P, 323 S, 5, 6, 626, B-SERIE, BT-50, DEMIO, MPV, MX-3, MX-5, MX-6, PREMACY, XEDOS 6, XEDOS 9
MITSUBISHI
COLT, LANCER, PAJERO, SPACE WAGON
OPEL
AGILA
SUZUKI
ALTO, BALENO, CARRY, GRAND VITARA, IGNIS, JIMNY, LIANA, SAMURAI, SJ 410, SJ 413, SUPER CARRY, SWIFT, SX4, VITARA, WAGON R, WAGON R+, X-90
TOYOTA
CAMRY, COROLLA, HIACE, HILUX, LAND CRUISER, LITEACE, MODELL F, STARLET
VW
TARO

Note:

330577 - OIL PRESSURE SWITCH

RENAULT
82 00 671 274

DACIA
LOGAN, LOGAN MCV, SANDERO
RENAULT
LOGAN

Note: Number of ports : 1

330578 - OIL PRESSURE SWITCH

RENAULT
82 00 671 271

RENAULT
CLIO, MODUS, TWINGO

Note: Number of ports : 1

330595 - OIL PRESSURE SWITCH

FORD
1625687, 3696907, D2AF 9278 AA, F8DF 12A650 NDMR

FORD
COUGAR, MONDEO

Note:

330623 - OIL PRESSURE SWITCH

FORD
1U5T 9278 AA, 3553091, 4176807, F8AF 9278 AA
MAZDA
A J03 18 501, Z ZT1 18 501

FORD
MAVERICK, MONDEO
FORD USA
WINDSTAR
MAZDA
MPV

Note: Number of ports : 1

330630 - OIL PRESSURE SWITCH

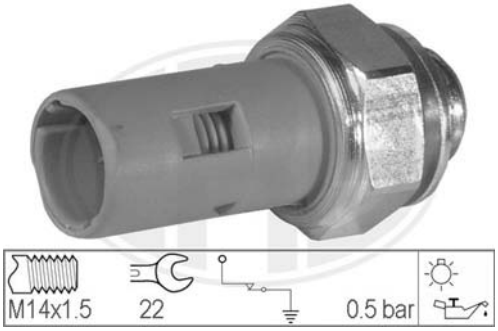

GENERAL MOTORS
93 160 284, 93 198 196
NISSAN
22630-00Q1D, 25240-00Q0B, 25240-00QAB, 25240-AW300
OPEL
44 10 676, 44 33 880
RENAULT
82 00 026 650, 82 00 670 483, 82 00 671 279
SUZUKI
37820-84A00-000
VOLVO
9128771-4

DACIA
DUSTER
NISSAN
INTERSTAR, KUBISTAR, MICRA, PRIMASTAR, PRIMERA
OPEL
MOVANO, VIVARO
RENAULT
AVANTIME, CLIO, ESPACE, GRAND SCENIC, KANGOO, LAGUNA, MASTER, MEGANE, MODUS, SCENIC, THALIA, TRAFIC II, VEL SATIS
SUZUKI
GRAND VITARA, JIMNY
VOLVO
S40, V40

Note: Number of ports : 1

330672 - OIL PRESSURE SWITCH

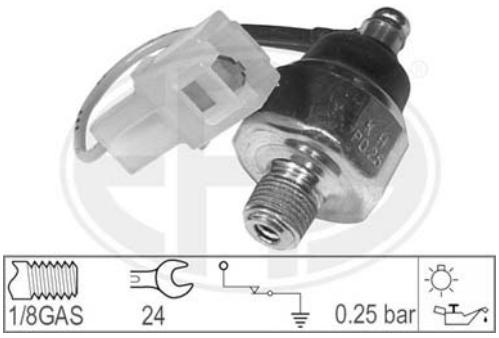

HYUNDAI
94750-32800
KIA
AA100-18-501B

HYUNDAI
SONATA

Note:

330673 - OIL PRESSURE SWITCH

HYUNDAI
94750-39800
KIA
94750-39800

HYUNDAI
TERRACAN, XG
KIA
CARNIVAL, OPIRUS, SORENTO

Note:

330684 - OIL PRESSURE SWITCH

FIAT
504026706, 504310254, 98442879

FIAT
DUCATO
IVECO
EuroCargo, EuroStar

Note:

330685 - OIL PRESSURE SWITCH

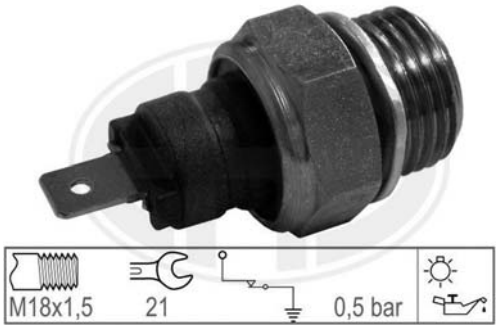

FIAT
7910248333
VOLVO
1218360

LANCIA
THEMA
VOLVO
760, 780, 960

Note:

330690 - OIL PRESSURE SWITCH

IVECO
4746909

IVECO
TurboStar

Note:

330695 - OIL PRESSURE SWITCH

VW
027 919 081 1, 030 919 081 1

FORD
FIESTA

Note:

330696 - OIL PRESSURE SWITCH

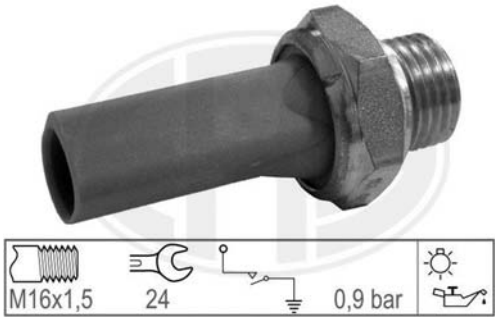

SKODA
047 919 081 B

SKODA
FABIA, OCTAVIA

Note:

330697 - OIL PRESSURE SWITCH

GENERAL MOTORS
93 180 245
NISSAN
25240-00QAG, 25240-4M400, 25240-4M40E
OPEL
44 15 207
RENAULT
25 24 04M 40E, 77 01 059 974

INFINITI
FX, M35, M45
NISSAN
370 Z, 370 Z Roadster, CUBE, INTERSTAR, MICRA, MICRA C+C, MURANO, NOTE, NV200, NV200 EVALIA, PATHFINDER, PATROL GR, PICK UP, PRIMERA, QASHQAI, TEANA, TERRANO, TIIDA, X-TRAIL
OPEL
MOVANO
RENAULT
LAGUNA, MASTER
VAUXHALL
MOVANO

Note:

330698 - OIL PRESSURE SWITCH

GENERAL MOTORS
93 198 166
NISSAN
25240-00Q0A, 25240-00Q0H, 25240-00QAH
OPEL
44 31 212, 44 33 805
RENAULT
82 00 359 627, 82 00 670 467, 82 00 671 272
SUZUKI
37820-67J01-000

NISSAN
CUBE, INTERSTAR, JUKE, KUBISTAR, MICRA, NOTE, NV200, NV200 EVALIA, PATHFINDER, PRIMASTAR, QASHQAI, TIIDA, X-TRAIL
OPEL
MOVANO, VIVARO
RENAULT
CLIO, CLIO Grandtour, ESPACE, FLUENCE, GRAND SCENIC, KANGOO, KANGOO BE BOP, KOLEOS, LAGUNA, MASTER, MEGANE, MEGANE CC, MODUS, SCENIC, THALIA, TRAFIC II, TWINGO, VEL SATIS
SUZUKI
GRAND VITARA
VAUXHALL
MOVANO, VIVARO

Note:

330699 - OIL PRESSURE SWITCH

RENAULT
82 00 359 633, 82 00 671 275

DACIA
DUSTER, LOGAN, LOGAN MCV, SANDERO
RENAULT
CLIO, KANGOO, KANGOO BE BOP, LOGAN, MEGANE, SANDERO, THALIA, TWINGO

Note:

330700 - OIL PRESSURE SWITCH

HYUNDAI
94750-02000

HYUNDAI
i10
KIA
PICANTO

Note:

BRAKE LIGHT SWITCHES

page
507

Brake Light Switch
Interruttore Luce Freno
Interrupteur des feux de freins
Bremslichtschalter

ERA S.p.A. - April 2012

330032 - BRAKE LIGHT SWTCH

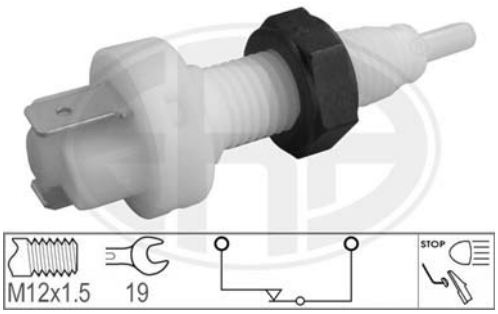

ALFA ROMEO
60701852
CITROENPEUGEOT
4534 06
FIAT
3900908, 3904637, 3917315, 3921883, 4035421, 4067916, 4124209, 4177122, 4177124, 4177172, 4220470, 4220471, 4345643, 4345645, 4356090, 4381973, 82304822, 82416969
IVECO
4067916, 504156184
VW
6U0 945 515, SE 127952.000A

ALFA ROMEO
6, ALFETTA, GIULIETTA, SPIDER
FIAT
124, 126, 127, 128, 131, 132, 850, ARGENTA, CINQUECENTO, DUCATO, DUNA, FIORINO, FIORINO Pick up, PANDA, REGATA, RITMO, TALENTO, UNO, X 1/9
FSO
126P, POLONEZ
IVECO
DAILY I
LADA
NIVA, SAMARA
LANCIA
A 112, BETA, PRISMA
SEAT
FURA, MARBELLA, RONDA, TERRA
SKODA
FAVORIT, FELICIA
ZASTAVA
101, YUGO

Note: Number of ports : 2

330033 - BRAKE LIGHT SWTCH

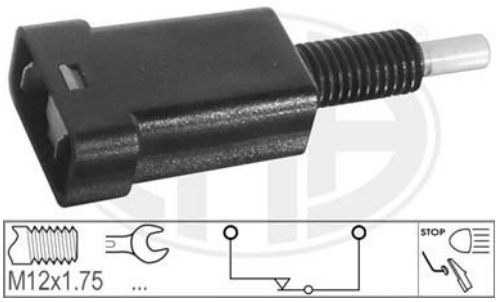

FORD
1478163, 1572591, 6088639, 71BB 13480 AC, 71BB 13480 AD, E0RZ 13480 A

FORD
CAPRI, CORTINA, ESCORT, FIESTA, ORION, TAUNUS

Note: Number of ports : 2

330034 - BRAKE LIGHT SWTCH

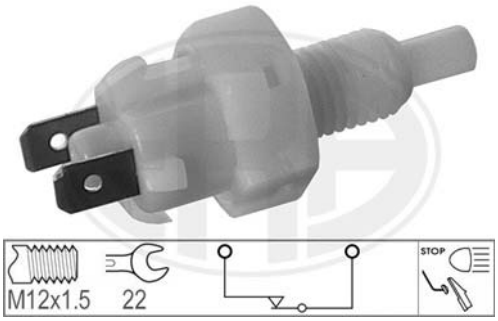

OPEL
12 40 590
SAAB
8577702, 8577736

OPEL
ASCONA, COMBO, CORSA, MANTA, OMEGA, SENATOR, TIGRA
SAAB
900

Note: Number of ports : 2

330035 - BRAKE LIGHT SWTCH

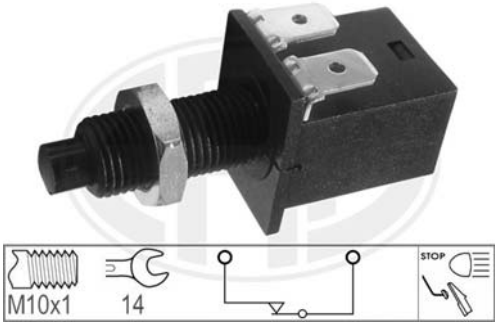

RENAULT
77 00 511 899, 77 00 544 807, 77 00 562 527, 77 01 348 722

RENAULT
18, 20, 4, 5

Note: Number of ports : 2

330036 - BRAKE LIGHT SWTCH

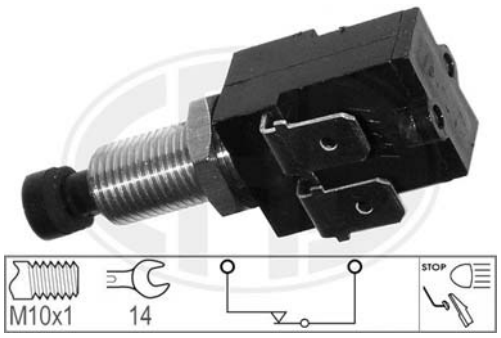

CITROENPEUGEOT
4534 04, 4534 13, 91 500 881, 96 001 647, 96 005 949
MASSEY FERGUSON
3380073 M01

CITROËN
AX, SAXO
PEUGEOT
106, 205, 305

Note:

330037 - BRAKE LIGHT SWTCH

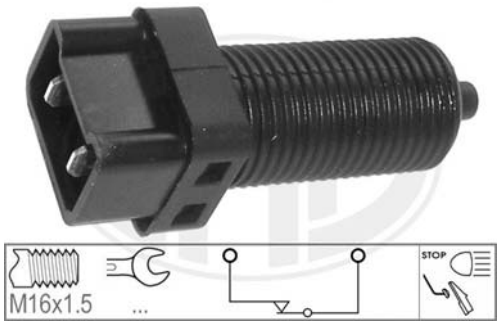

OPEL
09 109 724, 44 01 724
RENAULT
77 00 700 414, 77 00 732 503, 77 01 349 273

ALPINE
V6
OPEL
ARENA
RENAULT
11, 14, 21, 25, 4, 9, SUPER 5

Note: Number of ports : 2

330038 - BRAKE LIGHT SWTCH

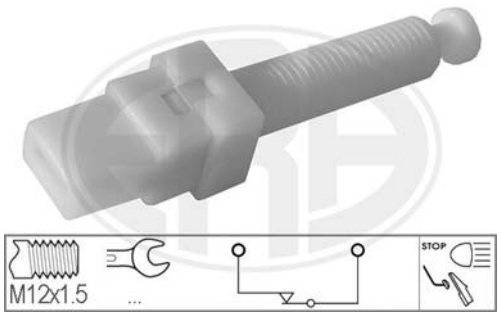

VW
811 945 513, 857 945 515, 857 945 515 A

AUDI
100

Note: Number of ports : 2

330039 - BRAKE LIGHT SWTCH

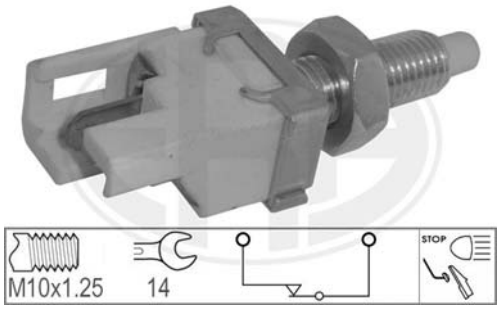

KIA
0B001-66-490B, DX5066490, KKY01-66-490, MDX50-66-490
MAZDA
B 001 66 490, B 002 66 490, U H71 66 490
MITSUBISHI
MB435457
TOYOTA
84340 01010, 84340 32030

DAIHATSU
CUORE, MOVE, SIRION, TERIOS, YRV
KIA
AVELLA, BESTA, CARENS, CARNIVAL, CLARUS, K2500, K2700, PREGIO, PRIDE, RETONA, RIO, SEPHIA, SHUMA, SPORTAGE
MAZDA
121, 323, 323 C, 323 F, 323 P, 323 S, 626, 929, B-SERIE, BT-50, DEMIO, E-SERIE, MPV, MX-3, MX-5, MX-6, PREMACY, RX 7, XEDOS 6
MITSUBISHI
3000 GT, COLT, ECLIPSE, GALANT, GRANDIS, L 200, LANCER, OUTLANDER, PAJERO, PAJERO SPORT, SPACE RUNNER, SPACE STAR, STARION
TOYOTA
4 RUNNER, CAMRY, CARINA, CELICA, COROLLA, HILUX, LAND CRUISER, LAND CRUISER 80, PREVIA, STARLET, TERCEL
VW
TARO

Note: Number of ports : 2

330040 - BRAKE LIGHT SWTCH

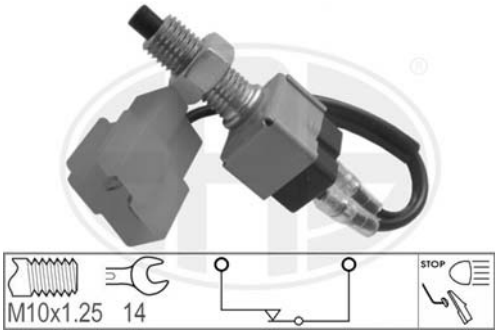

TOYOTA
84340 12020, 84340 20011, 84340 22040, 84340 22060, 84340 22071, 84340 22072, 84340 35010, 84340 36030

HYUNDAI
H100
TOYOTA
COROLLA, HIACE, LAND CRUISER, LITEACE, MODELL F

Note: Number of ports : 2

330041 - BRAKE LIGHT SWTCH

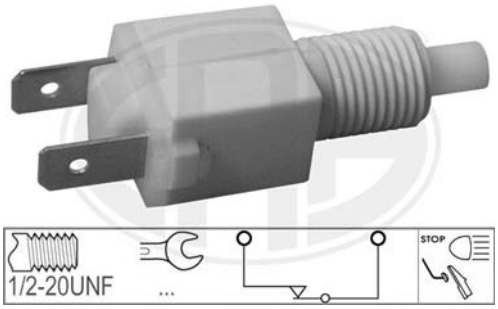

LAND ROVER
13H 3735L, 560864

AUSTIN
MONTEGO
LAND ROVER
DISCOVERY, RANGE ROVER
ROVER
100, 100 (METRO), 200, MAESTRO, MINI, MONTEGO

Note:

330042 - BRAKE LIGHT SWTCH

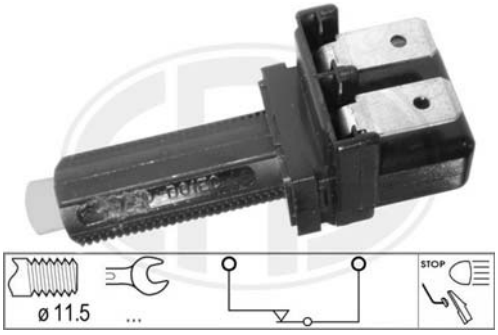

FORD
1604918, 6089985, 82GB 13480 AA, E5RY 13480 A
MAZDA
1 E03 66 490
MERCEDES-BENZ
001 545 07 09
VOLVO
3412682
VW
547 945 515 A

HYUNDAI
H100
TOYOTA
COROLLA, HIACE, LAND CRUISER, LITEACE, MODELL F

Note:

330043 - BRAKE LIGHT SWTCH

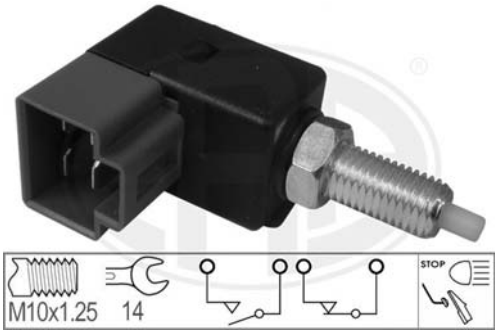

HYUNDAI
93810-32000, 93810-32001, 93810-38100, 93810-38110, 93810-3K000

HYUNDAI
COUPE, LANTRA, S COUPE, SONATA, TERRACAN

Note: Number of ports : 4

330044 - BRAKE LIGHT SWTCH

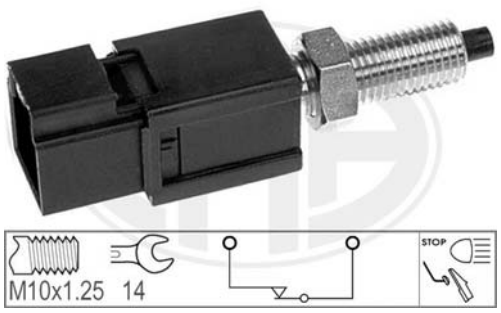

FORD
1953659
NISSAN
25320-01B00, 25320-0B000, 25320-0T000, 25320-21P00, 25320-75A00
OPEL
12 40 552, 94 118 754, 94 362 930
SUBARU
83311-AA010, 83311-AA011

FORD
MAVERICK
INFINITI
G20, J30, M30, Q45
NISSAN
100 NX, 200 SX, 300 ZX, ALMERA, BLUEBIRD, CABSTAR, LAUREL, MAXIMA, PATHFINDER, PATROL GR, PICK UP, PRAIRIE PRO, PRIMERA, SERENA, SUNNY, TERRANO, URVAN
OPEL
CAMPO, MONTEREY
SUBARU
FORESTER, IMPREZA, LEGACY

Note:

330045 - BRAKE LIGHT SWTCH

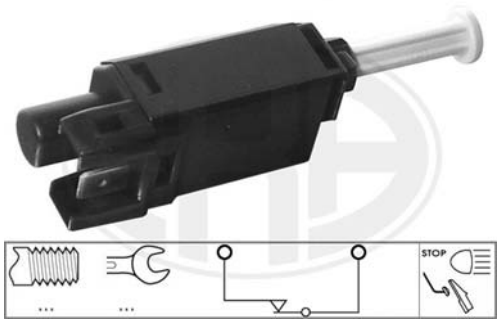

VW
322 945 515

SEAT
TOLEDO
VW
DERBY, GOLF, JETTA, PASSAT, POLO, SANTANA, SCIROCCO

Note: Number of ports : 2

330046 - BRAKE LIGHT SWTCH

BMW
61 31 1 378 207, 61 31 1 378 208, 61 31 8 360 420

BMW
3, 5, 7, Z1

Note: Number of ports : 2

330047 - BRAKE LIGHT SWTCH

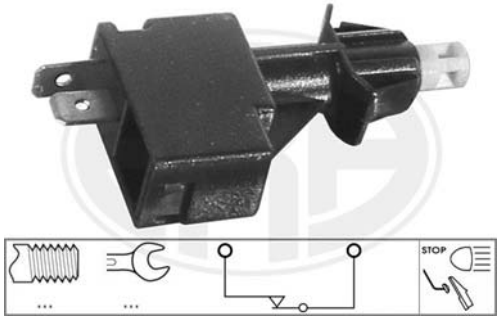

SAAB
9505462

SAAB
9000

Note: Number of ports : 2

330048 - BRAKE LIGHT SWTCH

CITROENPEUGEOT
6552 CZ
FIAT
7619027

CITROËN
JUMPER
FIAT
DUCATO, DUNA, ELBA, FIORINO, FIORINO Pick up, REGATA, RITMO, UNO
INNOCENTI
ELBA
LANCIA
DELTA, PRISMA
PEUGEOT
BOXER

Note: Number of ports : 2

330049 - BRAKE LIGHT SWTCH

ALFA ROMEO
60531609
FIAT
7619028, 7619084, 82419960, 82444120

ALFA ROMEO
33, 75, SZ
FIAT
CROMA, DUNA, REGATA, UNO
LANCIA
DELTA, PRISMA, THEMA

Note: Number of ports : 3

330050 - BRAKE LIGHT SWTCH

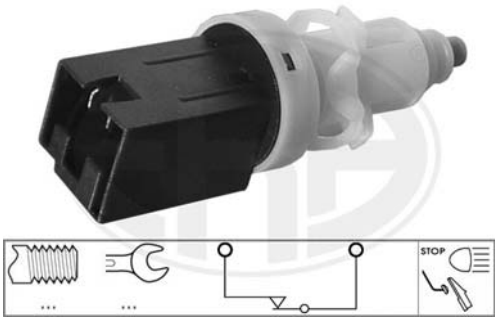

CITROENPEUGEOT
4534 17
FIAT
7627639, 7682537

ALFA ROMEO
166, GTV, SPIDER
CITROËN
JUMPER
FIAT
BRAVA, BRAVO, COUPE, DUCATO, FIORINO, MAREA, TEMPRA, TIPO, UNO
LANCIA
DEDRA, DELTA, KAPPA, LYBRA
PEUGEOT
BOXER

Note: Number of ports : 2

330051 - BRAKE LIGHT SWTCH

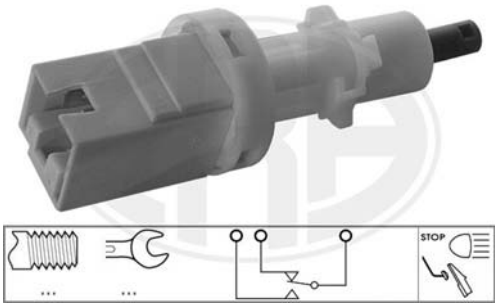

ALFA ROMEO
60805125
CITROENPEUGEOT
4534 32
FIAT
46543839, 46742766, 500319244, 7627401, 7682536

ALFA ROMEO
155, 166, GTV, SPIDER
CITROËN
JUMPER
FIAT
COUPE, DUCATO, FIORINO, MAREA, TEMPRA, TIPO, UNO
IVECO
DAILY II
LANCIA
DEDRA, DELTA, KAPPA, LYBRA
PEUGEOT
BOXER

Note: Number of ports : 3

330052 - BRAKE LIGHT SWTCH

CITROENPEUGEOT
4534 09, 4534 15

PEUGEOT
405, 505, 605

Note:

330053 - BRAKE LIGHT SWTCH

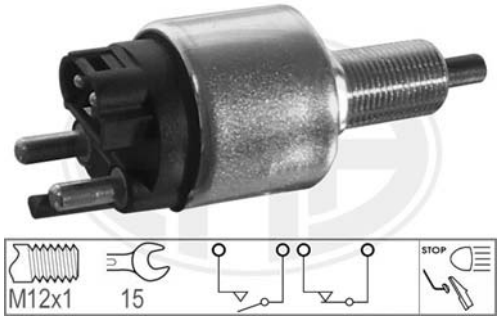

MERCEDES-BENZ
000 545 35 09, 000 545 87 09

MERCEDES-BENZ
190, G-CLASS, KOMBI, S-CLASS, SL
PUCH
G-MODELL

Note: Number of ports : 4

330054 - BRAKE LIGHT SWTCH

RENAULT
77 00 759 990

RENAULT
ESPACE

Note:

330055 - BRAKE LIGHT SWTCH

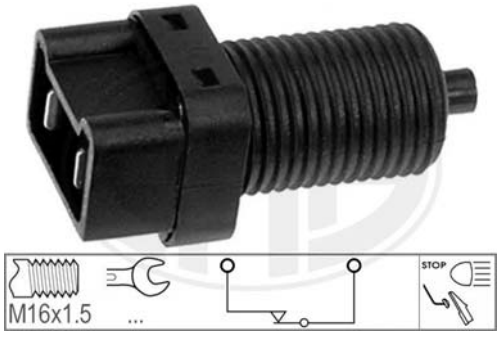

MITSUBISHI
MB953385
OPEL
44 05 731
RENAULT
77 00 785 258
VOLVO
30870941-9

MITSUBISHI
CARISMA, SPACE STAR
OPEL
ARENA
RENAULT
19, 21, CLIO, ESPACE, LAGUNA, RAPID, SAFRANE, TRAFIC, TWINGO
VOLVO
S40, V40

Note:

330056 - BRAKE LIGHT SWTCH

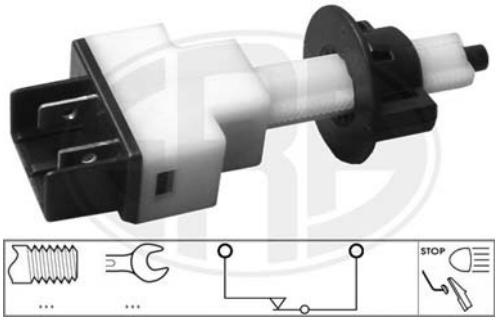

VW
0003954674, SE 023952.510B

SEAT
IBIZA, MALAGA

Note: Number of ports : 2

330057 - BRAKE LIGHT SWTCH

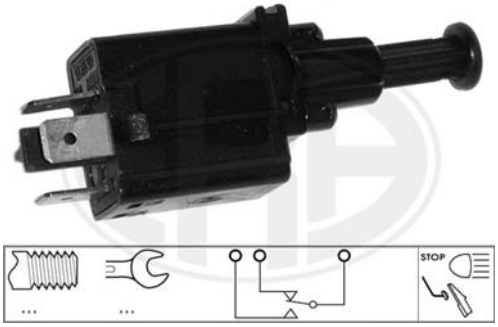

OPEL
12 40 594, 12 40 595, 90 355 907

OPEL
ASTRA, ASTRA F CLASSIC, CALIBRA, VECTRA

Note:

330058 - BRAKE LIGHT SWTCH

MERCEDES-BENZ
000 545 77 09, 000 545 86 09, 000 545 99 09, 001 545 01 09

MERCEDES-BENZ
190, C-CLASS, CABRIOLET, CLK, COUPE, E-CLASS, G-CLASS, KOMBI, S-CLASS, SL, SLK, V-CLASS
PUCH
G-MODELL

Note: Number of ports : 4

330059 - BRAKE LIGHT SWTCH

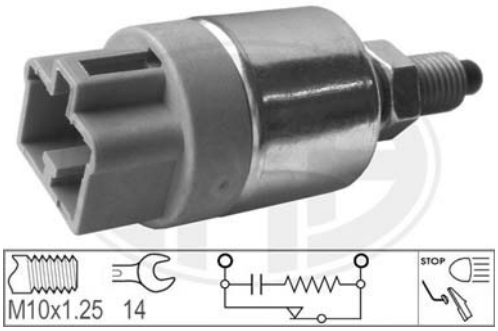

HONDA
35350 S04 003
TOYOTA
84340 32050, 84340 32090, 84340 35020, 84340 42010
VW
J84 340 320 50

HOLDEN
APOLLO
HONDA
CIVIC, CR-V, PRELUDE
LEXUS
IS, RX
TOYOTA
4 RUNNER, AVENSIS, AVENSIS VERSO, CAMRY, CARINA, CELICA, COROLLA, HIACE, HILUX, LAND CRUISER, LAND CRUISER 80, LAND CRUISER 90, MR 2, PASEO, PICNIC, PREVIA, PRIUS, RAV 4, STARLET, YARIS, YARIS VERSO
VW
TARO

Note:

330060 - BRAKE LIGHT SWTCH

CITROENPEUGEOT
4534 11, 4534 51, 96 040 821
FIAT
9619403780, 9653868380

CITROËN
BERLINGO, C3, EVASION, JUMPY, XSARA
FIAT
SCUDO, ULYSSE
LANCIA
ZETA
PEUGEOT
106, 306, 405, 406, 806, EXPERT, PARTNER

Note: Number of ports : 2

330061 - BRAKE LIGHT SWTCH

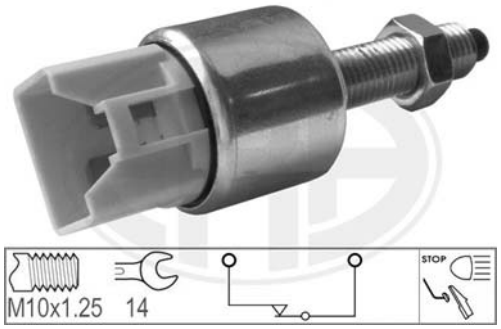

HONDA
35350 SK4 E00, 35350 SK4 E01
ROVER
XKB10001, XKB10003

HONDA
ACCORD, CIVIC, CONCERTO
MG
MG TF, MG ZR, MG ZS, MGF
ROVER
200, 25, 400, 45, 600, 800, CABRIOLET, COUPE

Note:

330062 - BRAKE LIGHT SWTCH

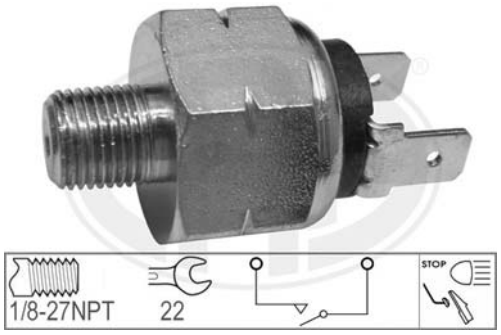

FIAT
31331116, 4022865, 631331116
IVECO
4165210

FIAT
500, 600

Note: Operating Mode : Hydraulic

330063 - BRAKE LIGHT SWTCH

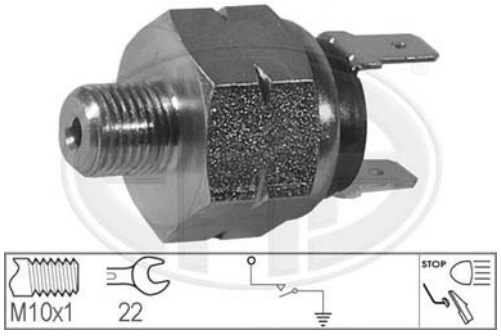

VW
113 945 515 H

VW
CADDY, DERBY, GOLF, LT 28-35, LT 40-55, PASSAT, POLO, SCIROCCO

Note: Operating Mode : Hydraulic

330064 - BRAKE LIGHT SWTCH

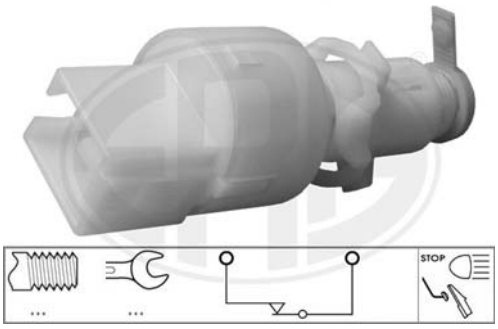

ALFA ROMEO
60812838, 60813513
CITROENPEUGEOT
4534 29
FIAT
46433243, 46519703, 82483048

ALFA ROMEO
145, 146, 155, 156, 166, GTV, SPIDER
CITROËN
JUMPER
FIAT
BARCHETTA, BRAVA, BRAVO, COUPE, DUCATO, MULTIPLA, PALIO, PANDA, PUNTO, SEICENTO, SIENA, STRADA
LANCIA
KAPPA, THEMA, Y
PEUGEOT
BOXER

Note: Number of ports : 2

330065 - BRAKE LIGHT SWTCH

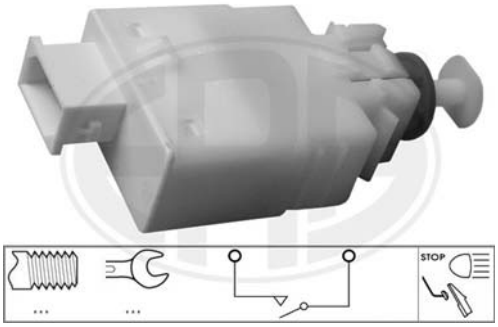

BMW
61 31 8 360 421
OPEL
12 39 435, 12 39 443, 90 494 519, 90 569 685

BMW
3, 5, 7, 8, Z3
OPEL
OMEGA, VECTRA

Note: Number of ports : 2

330066 - BRAKE LIGHT SWTCH

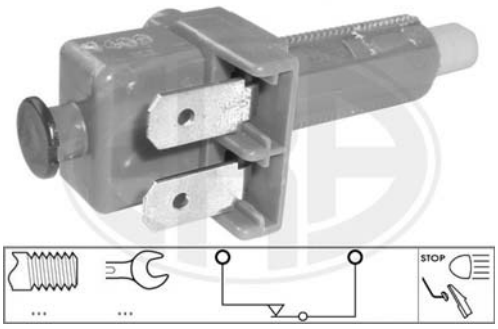

FORD
1374390, 6800511, 92AB 13480 AA, 92AB 13480 AB
OPEL
48 00 391, 9 197 391

FORD
ESCORT, ESCORT CLASSIC, FIESTA, KA, ORION, PUMA, STREET KA
OPEL
SPEEDSTER

Note: Number of ports : 2

330067 - BRAKE LIGHT SWTCH

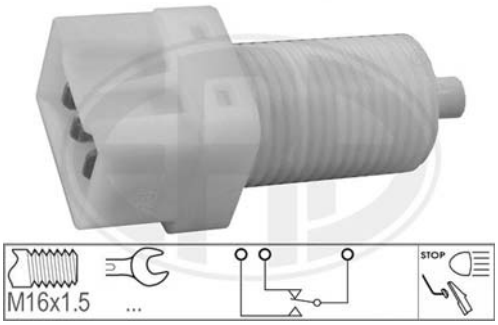

RENAULT
77 00 791 178

RENAULT
19, 21, 25, AVANTIME, CLIO, ESPACE, LAGUNA, SAFRANE

Note:

330068 - BRAKE LIGHT SWTCH

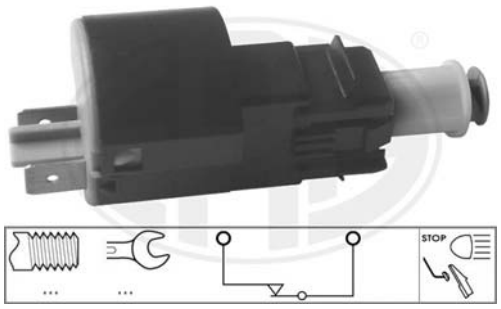

OPEL
09149765, 12 40 597, 62 40 156

OPEL
OMEGA

Note: Number of ports : 2

330069 - BRAKE LIGHT SWTCH

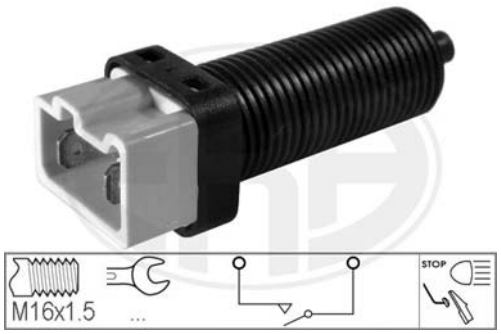

RENAULT
77 00 410 418, 77 00 811 340

RENAULT
MEGANE, SCENIC

Note: Number of ports : 2

330070 - BRAKE LIGHT SWTCH

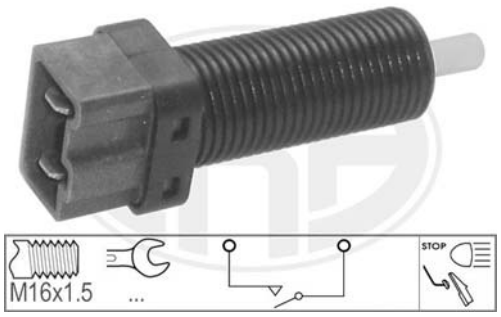

RENAULT
77 00 762 217

RENAULT
19

Note: Number of ports : 2

330071 - BRAKE LIGHT SWTCH

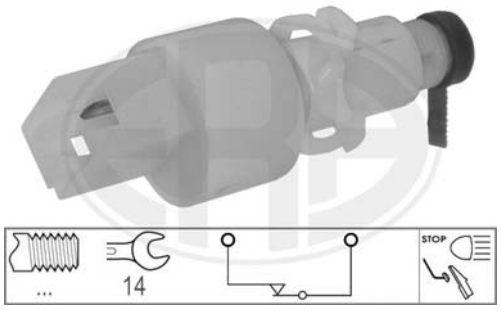

ALFA ROMEO
60615819, 60622385, 60810083, 60810536

ALFA ROMEO
145, 146

Note: Number of ports : 2

330072 - BRAKE LIGHT SWTCH

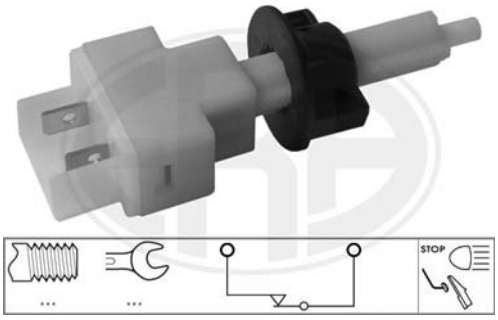

VW
6K0 945 515 A

SEAT
CORDOBA, IBIZA, INCA
VW
CADDY, POLO

Note: Number of ports : 2

330073 - BRAKE LIGHT SWTCH

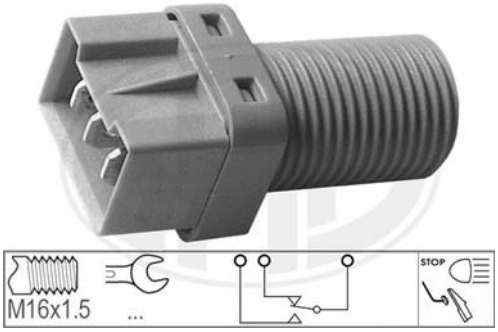

RENAULT
77 00 849 783

RENAULT
MEGANE, SCENIC

Note: Number of ports : 3

330074 - BRAKE LIGHT SWTCH

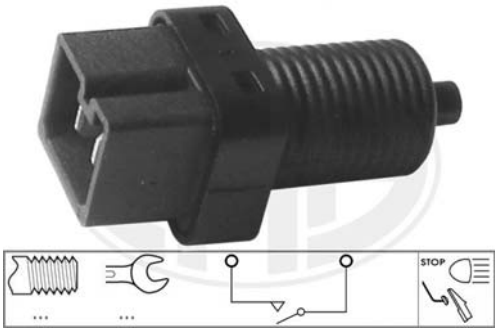

CITROENPEUGEOT
4534 26, 6552 W5
FIAT
9606177280, 9619403980

CITROËN
EVASION, JUMPY
FIAT
SCUDO, ULYSSE
LANCIA
ZETA
PEUGEOT
206, 306, 406, 806, EXPERT

Note: Number of ports : 2

330075 - BRAKE LIGHT SWTCH

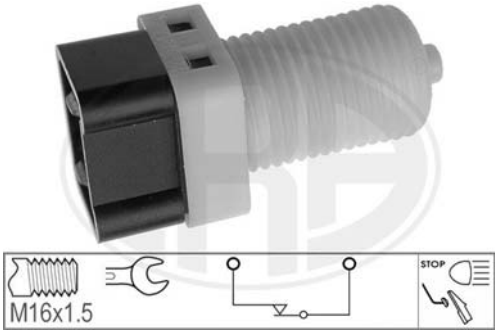

RENAULT
77 00 849 824

RENAULT
MEGANE, SCENIC

Note: Number of ports : 2

330076 - BRAKE LIGHT SWTCH

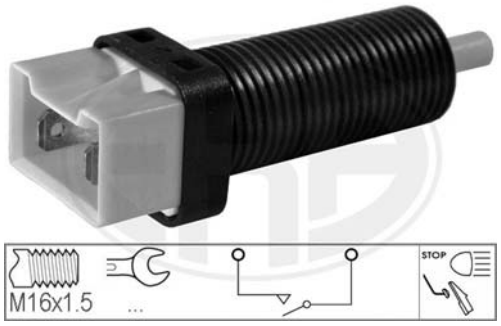

RENAULT
77 00 844 331

RENAULT
AVANTIME, ESPACE, LAGUNA

Note: Number of ports : 2

330077 - BRAKE LIGHT SWTCH

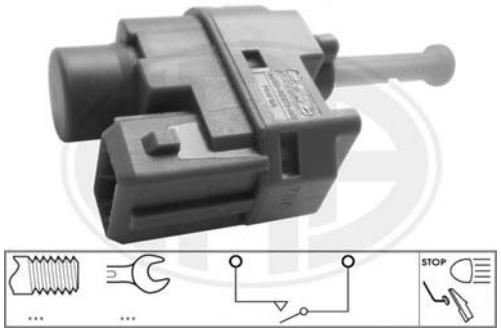

FORD
7029406, 94BB 9C872 AC

FORD
COUGAR, FIESTA, FOCUS, FUSION, MONDEO, SCORPIO
MAZDA
2

Note:

330078 - BRAKE LIGHT SWTCH

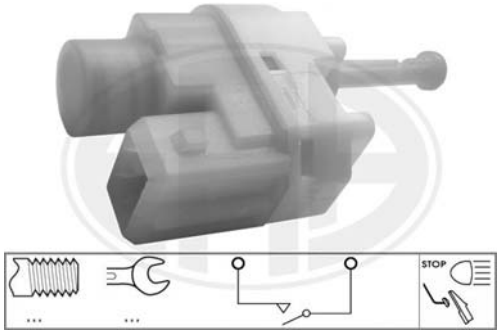

FORD
7029404, 93BB 9C872 AD

FORD
MONDEO

Note:

330079 - BRAKE LIGHT SWTCH

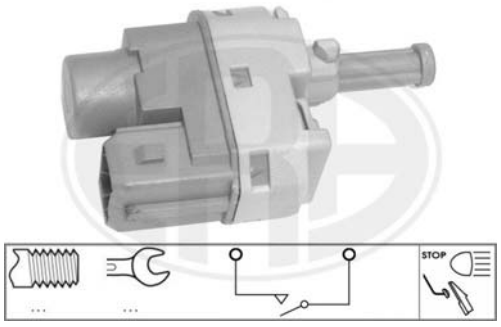

FORD
7029405, 93BB-9C872-BC

FORD
MONDEO

Note:

330080 - BRAKE LIGHT SWTCH

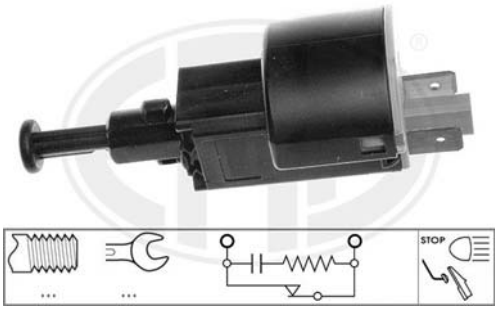

OPEL
12 40 008, 9 132 299

OPEL
ASTRA, VECTRA, ZAFIRA

Note:

330081 - BRAKE LIGHT SWTCH

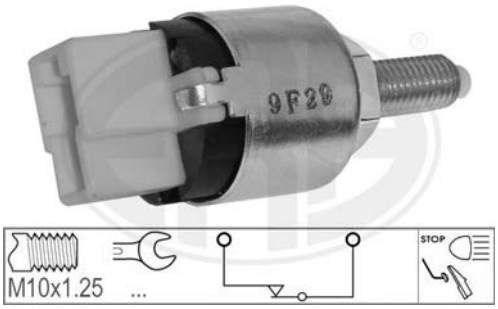

FORD
3922097, XM34 13480 BA
HYUNDAI
93810-22100
MITSUBISHI
MB229024
SUZUKI
37740-60A00, 37740-60D00, 37740-60D01, 37740-60D10
TOYOTA
84340 32030

ALFA ROMEO
147, 156, 159, 166, BRERA, GT, GTV, SPIDER
CITROËN
C-CROSSER, JUMPER
FIAT
500, BRAVO, CROMA, DOBLO, DUCATO, IDEA, LINEA, MULTIPLA, PALIO, PANDA, PUNTO, STILO
FORD
RANGER
HOLDEN
APOLLO, BARINA
HYUNDAI
ACCENT, ATOS, ATOS PRIME, COUPE, GALLOPER, GETZ, H-1, H100, LANTRA, S COUPE, SANTA FE', STAREX
KIA
JOICE, PICANTO
LANCIA
LYBRA, MUSA, THESIS, YPSILON
MITSUBISHI
COLT, L 200, LANCER, PAJERO, PAJERO SPORT, SPACE WAGON
PEUGEOT
4007, BOXER
SUZUKI
ALTO, BALENO, CARRY, GRAND VITARA, JIMNY, SAMURAI, SJ 413, SWIFT, VITARA, WAGON R+, X-90
TOYOTA
CAMRY, CELICA, MR 2

Note: Number of ports : 2

330327 - BRAKE LIGHT SWTCH

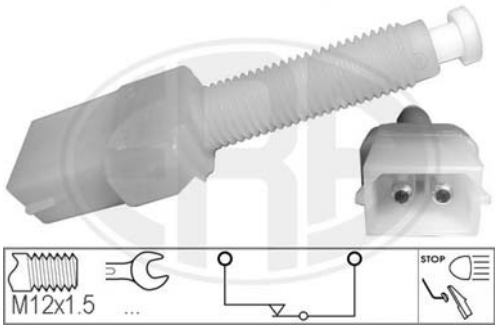

VW
443 945 515

AUDI
100, 200, 80, 90, A4, A6, A8, CABRIOLET, COUPE, V8
VW
PASSAT

Note: Number of ports : 2

330328 - BRAKE LIGHT SWTCH

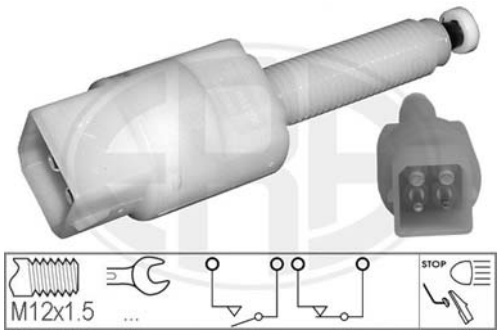

VW
4A0 945 515, 4A0 945 515 A

AUDI
A4, A6, A8, ALLROAD, CABRIOLET
SKODA
SUPERB
VW
PASSAT

Note: Number of ports : 4

330329 - BRAKE LIGHT SWTCH

KHD
1175755

KHD
TRACTORS, UNIVERSAL

Note: Number of ports : 2

330332 - BRAKE LIGHT SWTCH

KHD
TRACTORS, UNIVERSAL

Note: Colour : Red,Number of ports : 2

330336 - BRAKE LIGHT SWTCH

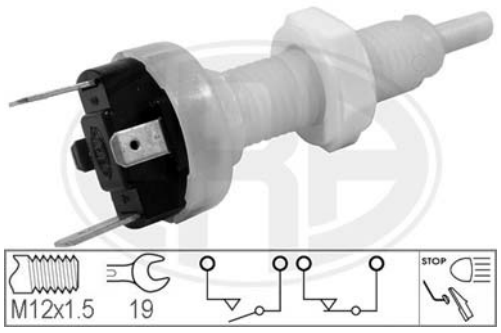

ALFA ROMEO
60515008
FIAT
5954516, 5964877, 82416970, 9459005

ALFA ROMEO
33, 90, GIULIETTA
FIAT
ARGENTA, CROMA, DUNA, REGATA, RITMO, UNO
SEAT
RONDA

Note: Number of ports : 4

330346 - BRAKE LIGHT SWTCH

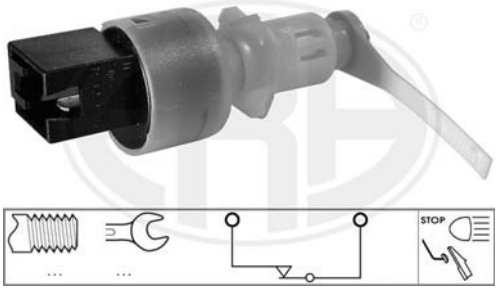

ALFA ROMEO
46760767

FIAT
DOBLO, PUNTO

Note: Number of ports : 2

330414 - BRAKE LIGHT SWTCH

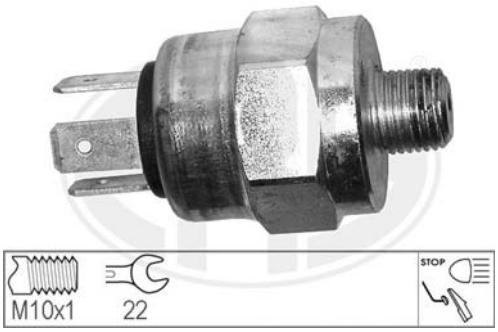

VW
113 945 515 G

AUDI
100, 80
PORSCHE
911, 912
VW
GOLF, JETTA, KAEFER, PASSAT, SCIROCCO

Note: Number of ports : 3,Operating Mode : Hydraulic

330415 - BRAKE LIGHT SWTCH

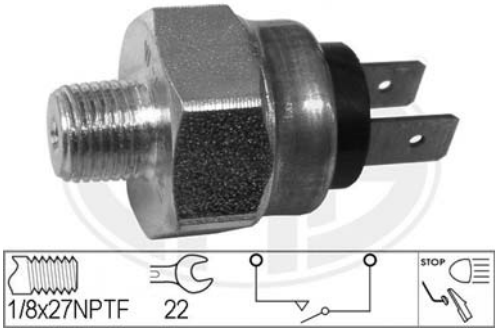

VOLVO
1501091

VOLVO
140, 144

Note: Number of ports : 2,Operating Mode : Hydraulic

330416 - BRAKE LIGHT SWTCH

BMW
34 35 1 182 270, 61 31 1 362 977

BMW
5, 6, 7, 8

Note: Operating Mode : Hydraulic

330418 - BRAKE LIGHT SWTCH

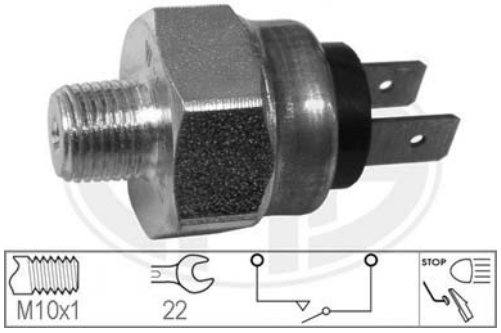

MAN
79 10071 00 36

TRACTORS
Case, Steyr, I.H.C., MAN

Note: Operating Mode : Hydraulic

330419 - BRAKE LIGHT SWTCH

BMW
34 33 1 150 922
VW
857 919 457 A, 857 919 457 B

BMW
5, 6, 7, 8

Note: Number of ports : 2,Operating Mode : Hydraulic

330426 - BRAKE LIGHT SWTCH

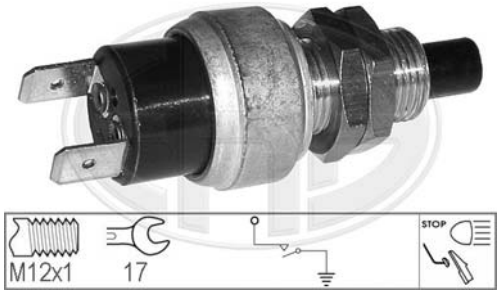

BMW
61 31 1 350 645, 61 31 1 368 786, 61 31 1 379 830
MERCESDES-BENZ
000 545 53 09, 000 545 68 09
SAAB
7334642
VOLVO
3544691-3, 679364-0
VW
481 945 515

BMW
3, 5, 6, 7
MERCEDES-BENZ
T1
VOLVO
240, 260, 740, 760, 780, 850, 940, 960

Note:

330429 - BRAKE LIGHT SWTCH

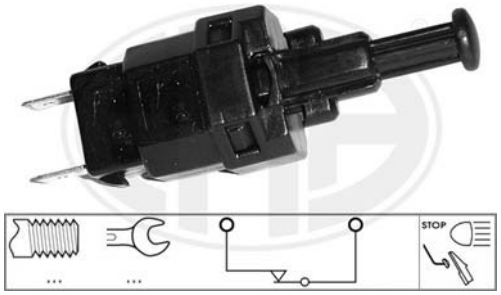

DAEWOO
90 196 375, 94 580 647, 96 567 247
LAND ROVER
XKB100080
OPEL
12 39 433, 12 40 591, 90 196 375, 90 504 499

DAEWOO
ESPERO, MATIZ, NEXIA
LAND ROVER
FREELANDER
MG
MG TF, MGF
OPEL
ASTRA, ASTRA F CLASSIC, CALIBRA, FRONTERA, KADETT, VECTRA, ZAFIRA

Note:

330430 - BRAKE LIGHT SWTCH

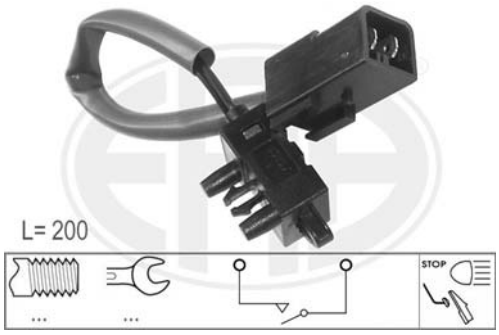

CITROENPEUGEOT
2127 C7

CITROËN
C3, C5, XANTIA, XM, XSARA PICASSO
PEUGEOT
PARTNER

Note: Number of ports : 2

330431 - BRAKE LIGHT SWTCH

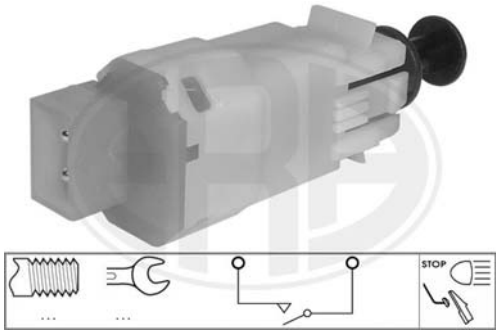

BMW
61 31 1 378 210
OPEL
12 39 427, 12 39 431, 90 458 543, 90 492 444

OPEL
ASTRA, COMBO, CORSA, OMEGA, ZAFIRA

Note: Number of ports : 2

330433 - BRAKE LIGHT SWTCH

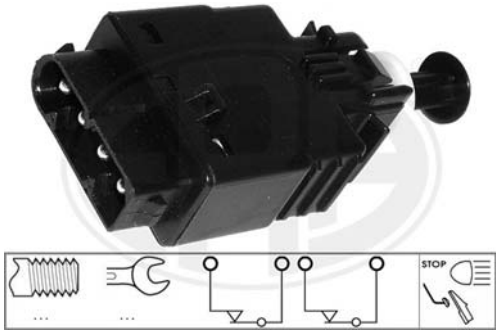

BMW
1 382 385, 61 31 1 382 385, 61 31 8 360 417, 8 360 417
GENERAL MOTORS
90 458 542
LAND ROVER
AMR 2010, PRC 9915
OPEL
12 40 598, 90 458 542

BMW
3, 5, 7, 8, Z3
LAND ROVER
DISCOVERY, RANGE ROVER
OPEL
OMEGA

Note: Number of ports : 4

330434 - BRAKE LIGHT SWTCH

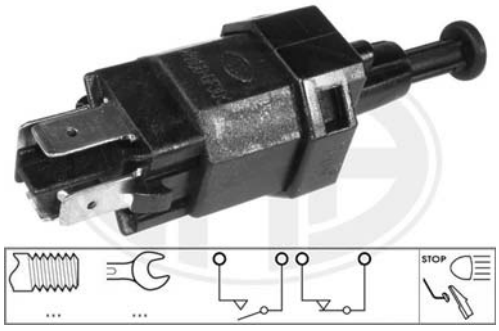

ALFA ROMEO
60585583
DAEWOO
96 312 343
OPEL
12 40 592, 90 243 815, 90 244 648
SAAB
4233342

ALFA ROMEO
164
DAEWOO
LEGANZA, MATIZ, NUBIRA
OPEL
VECTRA
PORSCHE
911, BOXSTER, CAYMAN
SAAB
9-5, 900

Note: Number of ports : 4

330435 - BRAKE LIGHT SWTCH

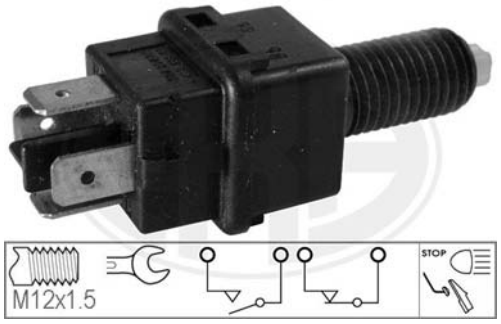

OPEL
12 40 593, 90 337 607

OPEL
OMEGA, SENATOR

Note: Number of ports : 4

330436 - BRAKE LIGHT SWTCH

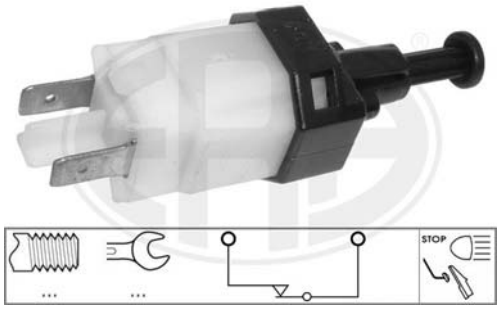

DAEWOO
96 212 027
OPEL
12 40 596, 90 307 473

DAEWOO
LANOS, LEGANZA, NUBIRA
OPEL
CALIBRA, VECTRA

Note: Number of ports : 2

330438 - BRAKE LIGHT SWTCH

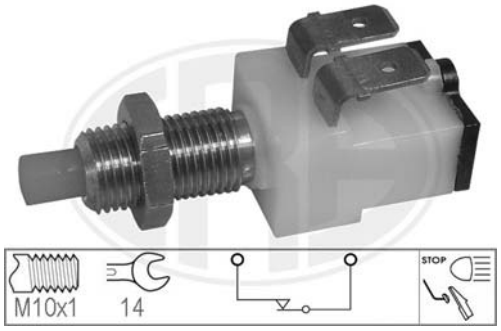

CITROENPEUGEOT
4534 02, 79 100 339 31

CITROËN
AX, BX, C15
PEUGEOT
104, 205, 305, 309, 504, 505, 604
TALBOT
SAMBA

Note: Number of ports : 2

330440 - BRAKE LIGHT SWTCH

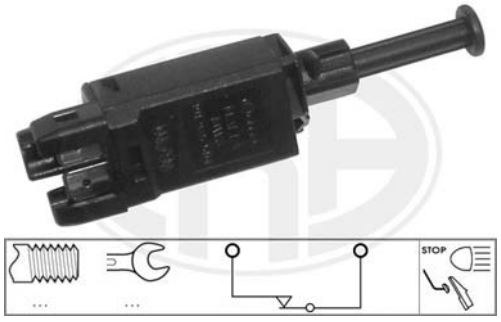

FORD
1044350, 7215734, 95VW 13480 AA, 95VW 13480 BB
VW
191 945 515, 191 945 515 A, 191 945 515 B, 6K0 945 515

AUDI
A3
FORD
GALAXY
SEAT
ALHAMBRA, AROSA, CORDOBA, IBIZA, LEON, TOLEDO
SKODA
OCTAVIA
VW
BORA, CORRADO, DERBY, GOLF, JETTA, LUPO, MULTIVAN, NEW BEETLE, PASSAT, POLO, SANTANA, SCIROCCO, SHARAN, TRANSPORTER, VENTO

Note: Number of ports : 2

330491 - BRAKE LIGHT SWTCH

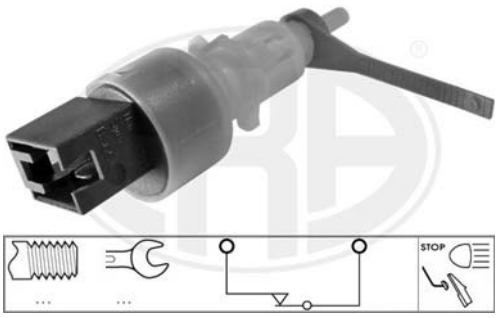

FIAT
46752843

ALFA ROMEO
166, GTV, SPIDER
FIAT
DOBLO, PUNTO

Note: Number of ports : 2

330492 - BRAKE LIGHT SWTCH

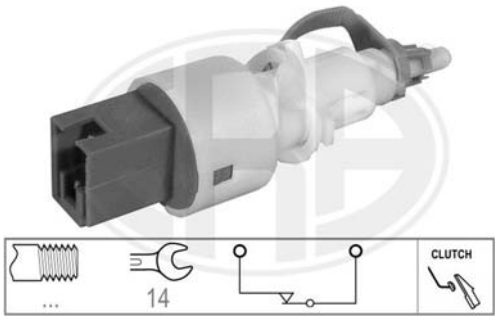

FIAT
46837391

CITROËN
NEMO
FIAT
LINEA, PALIO, SIENA, STRADA
PEUGEOT
BIPPER

Note:

330494 - BRAKE LIGHT SWTCH

FIAT
7628231

LANCIA
Y10

Note:

330503 - BRAKE LIGHT SWTCH

PORSCHE
955 613 110 31, 955 613 110 32
VW
1J0 945 511, 1J0 945 511 A,
1J0 945 511 B, 1J0 945 511 C, 1J0 945 511 D,
1J0 945 511 E, 1J0 945 511 F, 6Q0 945 511

AUDI
A3, R8
SEAT
ALTEA, ALTEA XL, CORDOBA, IBIZA, LEON, TOLEDO
SKODA
FABIA, OCTAVIA, ROOMSTER, ROOMSTER Praktik
VW
CADDY, FOX, GOLF, JETTA, POLO, TOURAN

Note: Number of ports : 4

330510 - BRAKE LIGHT SWTCH

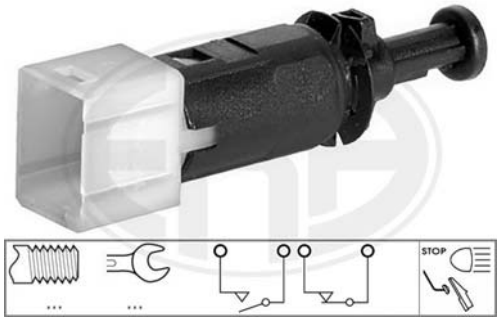

NISSAN
25320-00QAA
OPEL
44 15 882
RENAULT
77 00 414 988

MITSUBISHI
COLT
NISSAN
KUBISTAR, PRIMASTAR
RENAULT
CLIO, ESPACE, KANGOO, LAGUNA, MASTER, TRAFIC II, TWINGO, VEL SATIS

Note:

330512 - BRAKE LIGHT SWTCH

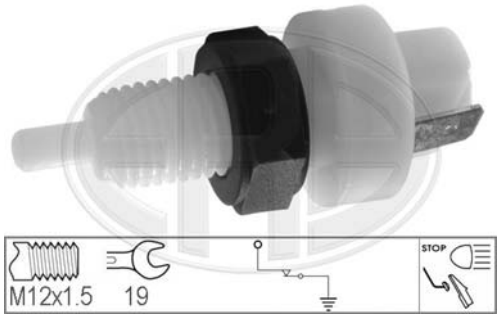

ALFA ROMEO
60501195

ALFA ROMEO
33, ALFASUD

Note:

330514 - BRAKE LIGHT SWTCH

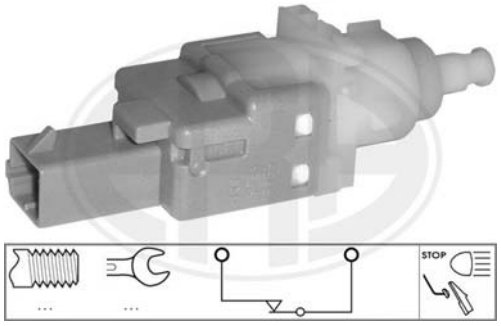

FIAT
51742745

FIAT
PUNTO

Note: Number of ports : 2

330517 - BRAKE LIGHT SWTCH

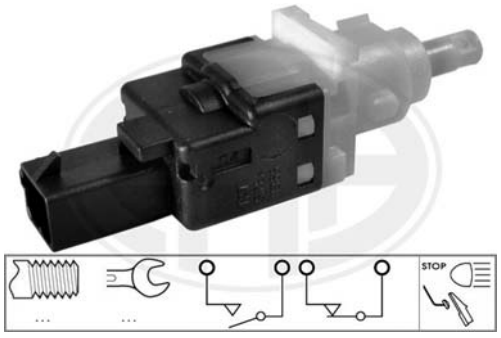

CITROENPEUGEOT
4534 50
FIAT
46840510, 60816501
FORD
1543231, 9S51 13480 AA

ALFA ROMEO
147, 156, 159, 166, BRERA, GT, GTV, SPIDER
CITROËN
JUMPER
FIAT
500, 500 C, BRAVO, CROMA, DOBLO, DUCATO, IDEA, LINEA, MULTIPLA, PALIO, PANDA, PUNTO, SIENA, STILO
FORD
KA
LANCIA
DELTA, LYBRA, MUSA, THESIS, YPSILON
PEUGEOT
BOXER

Note:

330519 - BRAKE LIGHT SWTCH

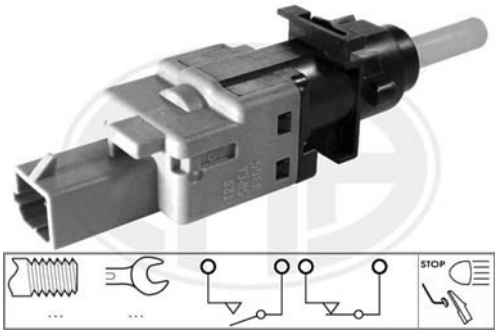

CITROENPEUGEOT
4534 43
FIAT
60668847

CITROËN
JUMPER
FIAT
DUCATO
LANCIA
THESIS
PEUGEOT
BOXER

Note: Number of ports : 4

330520 - BRAKE LIGHT SWTCH

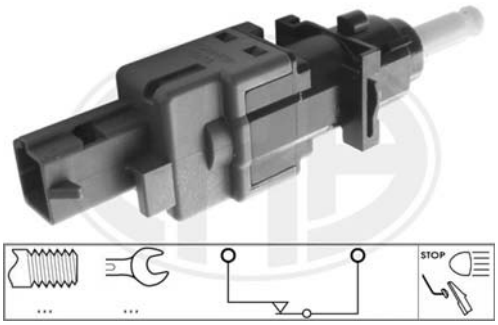

CITROENPEUGEOT
4534 38
FIAT
46742976, 46834703, 46840511, 60685431, 60816500

FIAT
MULTIPLA, PANDA
IVECO
DAILY II
LANCIA
Y

Note: Number of ports : 2

330521 - BRAKE LIGHT SWTCH

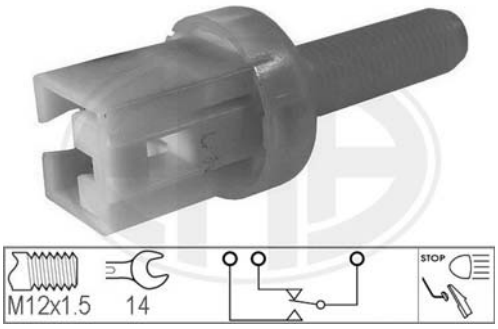

FIAT
82444707

FIAT
CROMA
LANCIA
THEMA

Note: Number of ports : 3

330523 - BRAKE LIGHT SWTCH

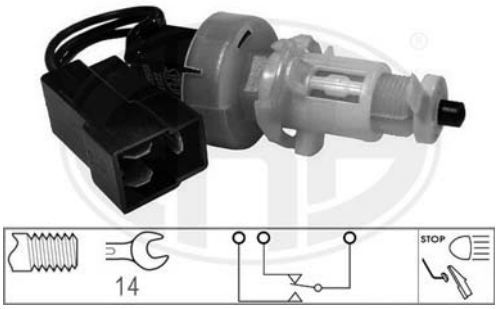

ALFA ROMEO
60569340

ALFA ROMEO
164

Note: Number of ports : 3

330529 - BRAKE LIGHT SWTCH

OPEL
09175185, 12 39 449, 12 40 017, 12 40 701

OPEL
ASTRA, SPEEDSTER, ZAFIRA

Note: Number of ports : 4

330545 - BRAKE LIGHT SWTCH

VW
1K2 945 511

AUDI
A3, A4, A6, A6 Allroad, A8, ALLROAD, Q7, R8
SEAT
ALTEA, ALTEA XL, AROSA, LEON, TOLEDO
SKODA
OCTAVIA, SUPERB
VW
CADDY, FOX, GOLF, JETTA, LUPO, PASSAT, PHAETON, POLO, SPACEFOX, TOUAREG, TOURAN

Note: Number of ports : 4

330547 - BRAKE LIGHT SWTCH

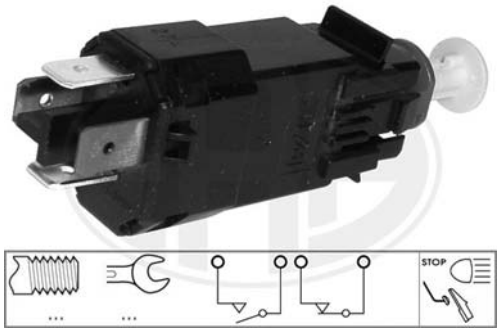

GENERAL MOTORS
13 173 407

OPEL
COMBO, CORSA, MERIVA, TIGRA
SUZUKI
IGNIS

Note: Number of ports : 4

330548 - BRAKE LIGHT SWTCH

GENERAL MOTORS
91 49 766
OPEL
62 40 058, 62 40 157

OPEL
COMBO, CORSA, MERIVA, OMEGA, TIGRA

Note: Number of ports : 4

330549 - BRAKE LIGHT SWTCH

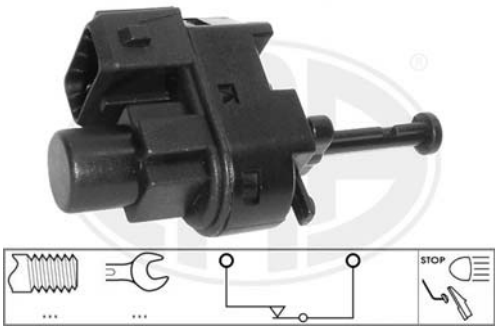

FORD
1062670, 93BB 13480 BB, 93BB 13480 BC
VW
8A0 266 490 A

FORD
COUGAR, FIESTA, FOCUS, FUSION, MONDEO, TOURNEO CONNECT, TRANSIT CONNECT
MAZDA
2

Note: Number of ports : 2

330596 - BRAKE LIGHT SWTCH

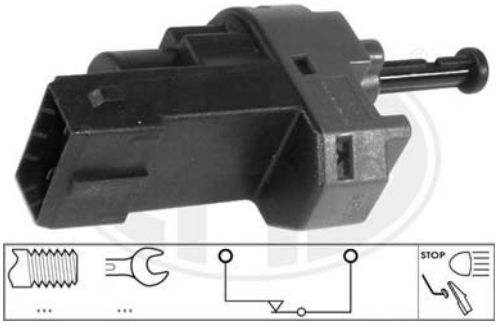

FORD
1071478, 7128327, 95GB 13480 AA, 95GB 13480 AB

FORD
SCORPIO

Note: Number of ports : 2

330597 - BRAKE LIGHT SWTCH

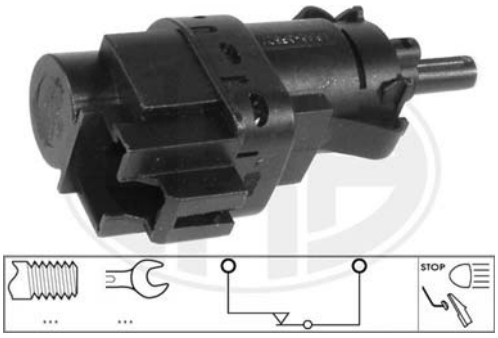

FORD
3M5T 13480 AC, 4832217
JAGUAR
C2S 44974
MAZDA
B R1A 66 490
VOLVO
30773935

FORD
C-MAX, FIESTA, FOCUS, FOCUS C-MAX, FUSION, GALAXY, KUGA, MONDEO, S-MAX, TOURNEO CONNECT, TRANSIT, TRANSIT CONNECT, TRANSIT TOURNEO
JAGUAR
X-TYPE
MAZDA
2, 3
VOLVO
C30, C70, S40, S80, V50, V70, XC70

Note: Number of ports : 2

330617 - BRAKE LIGHT SWTCH

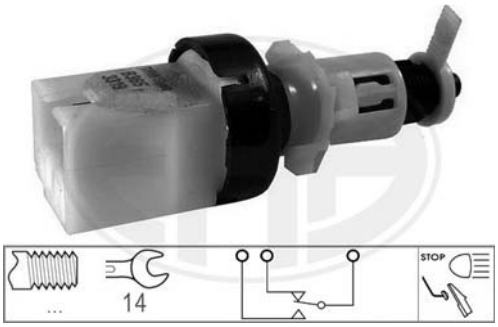

FIAT
46530958

LANCIA
DEDRA

Note: Number of ports : 3

330618 - BRAKE LIGHT SWTCH

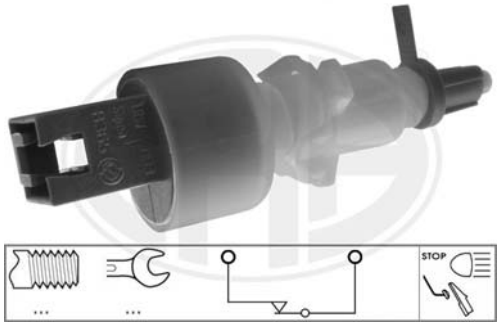

FIAT
46512059
IVECO
500365771

FIAT
MULTIPLA
IVECO
DAILY II
LANCIA
Y

Note: Number of ports : 2

330621 - BRAKE LIGHT SWTCH

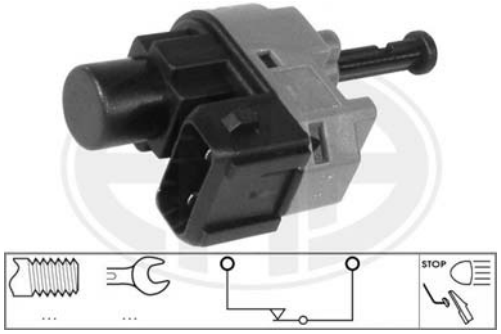

FORD
1119830, 1S7T 13480 AA

FORD
MONDEO

Note: Number of ports : 2

330629 - BRAKE LIGHT SWTCH

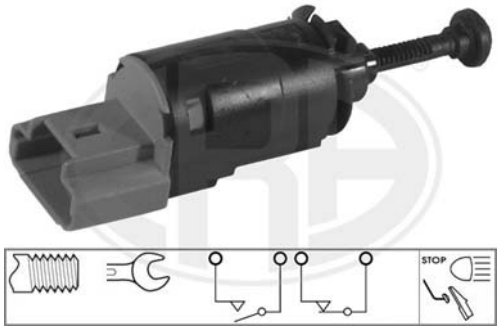

CITROENPEUGEOT
4534 48, 4534 63, 96 506 884 80, 96 656 023 80
FIAT
9650688480, 9665602380

CITROËN
BERLINGO, C2, C3, C4, C4 Grand Picasso, C4 Picasso, C5, C6, C8, JUMPY
FIAT
SCUDO, ULYSSE
LANCIA
PHEDRA
PEUGEOT
1007, 207, 207 CC, 207 SW, 307, 308, 308 SW, 407, 607, 807, EXPERT, EXPERT Tepee, PARTNER, PARTNER Tepee

Note: Number of ports : 4

330686 - BRAKE LIGHT SWTCH

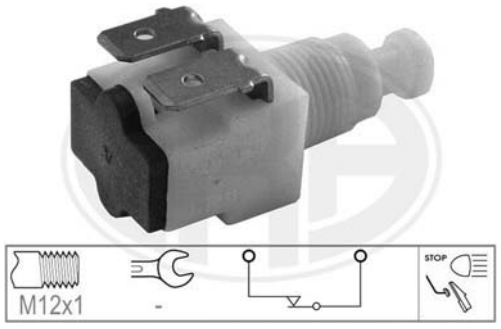

CITROENPEUGEOT
54 224 83, 95 494 332
VOLVO
3292319-5

CITROËN
2 CV, ACADIANE, CX, DYANE, GS, MEHARI
VOLVO
340-360

Note: Number of ports : 2

330701 - BRAKE LIGHT SWTCH

DAEWOO
8571005020X, 8571005030X
GENERAL MOTORS
94 109 863
HOLDEN
8941098630
HONDA
36750 SE0 003, 36750 SE0 013
ISUZU
8-94109-863-0
KIA
0K20C-66-490A, 93810 3E000
MITSUBISHI
MB487644, MB596608
OPEL
12 40 554
SSANGYONG
8571005020X

ACURA
INTEGRA, LEGEND, NSX, VIGOR
DAEWOO
KORANDO, MUSSO
HONDA
ACCORD, LEGEND, NSX, PRELUDE
ISUZU
TROOPER
KIA
CARENS, CARNIVAL, SEPHIA, SORENTO, SPORTAGE
MITSUBISHI
3000 GT, CARISMA, ECLIPSE, GALANT, PAJERO, PAJERO CLASSIC, PAJERO SPORT, SPACE STAR, STARION
OPEL
CAMPO, FRONTERA, MONTEREY
SSANGYONG
KORANDO
VAUXHALL
FRONTERA, MONTEREY

Note: Number of ports : 4

330702 - BRAKE LIGHT SWTCH

FIAT
7628232

LANCIA
Y10

Note: Number of ports : 3

330703 - BRAKE LIGHT SWTCH

TOYOTA
84340-06010, 84340-20060, 84340-32070, 84340-32110, 84340-35030, 84340-42020, 84340-47020, 84340-50020

HOLDEN
APOLLO
LEXUS
ES, GS, IS, LS, RX
TOYOTA
4 RUNNER, AVENSIS, CAMRY, CAMRY SOLARA, CELICA, COROLLA, CRESSIDA, ESTIMA, HIACE, LAND CRUISER 100, LAND CRUISER 80, LAND CRUISER 90, MR 2, PREVIA, PRIUS, RAV 4, SUPRA, YARIS, YARIS VERSO

Note: Number of ports : 4

330704 - BRAKE LIGHT SWTCH

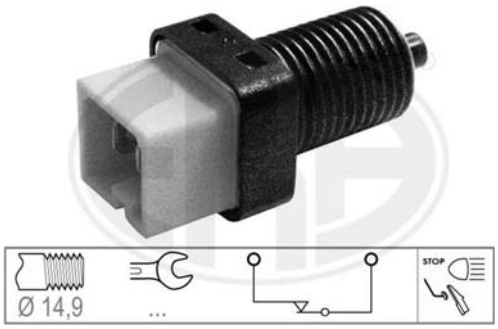

CITROENPEUGEOT
4534 35, 4534.21, 4534.52, 96 040 821
FIAT
9604082180, 9653868480

CITROËN
AX, BERLINGO, C3, C5, C8, JUMPY, SAXO, XSARA PICASSO, ZX
FIAT
ULYSSE
FORD
MONDEO
LANCIA
PHEDRA
PEUGEOT
106, 206, 307, 406, 607, 807, EXPERT, PARTNER

Note: Number of ports : 2

330705 - BRAKE LIGHT SWTCH

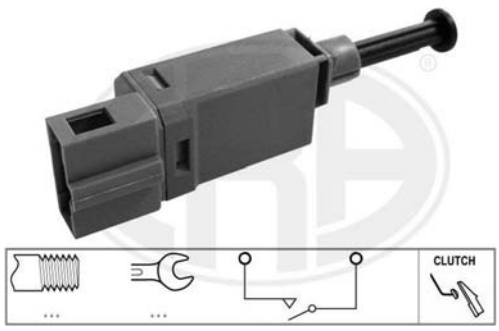

FORD
1044902, 7262702, 95VW-9E740-AB
SEAT
1H0 927 189 C
VW
1H0 927 189 C

FORD
GALAXY
SEAT
ALHAMBRA
VW
GOLF, LUPO, PASSAT, POLO, SHARAN, TRANSPORTER, VENTO

Note: Number of ports : 2

330706 - BRAKE LIGHT SWTCH

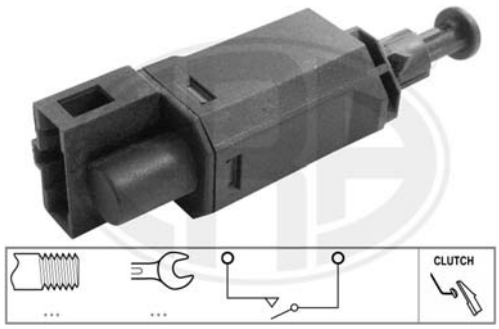

FORD
1044903, 7291993, 95VW-9E740-BA
SEAT
1H0 927 189 D
VW
1H0 927 189 A, 1H0 927 189 D

AUDI
A2, A3, TT
FORD
GALAXY
SEAT
ALHAMBRA, AROSA, LEON, TOLEDO
SKODA
OCTAVIA
VW
BORA, GOLF, LUPO, NEW BEETLE, PASSAT, POLO, SHARAN, TRANSPORTER

Note: Number of ports : 2

330707 - BRAKE LIGHT SWTCH

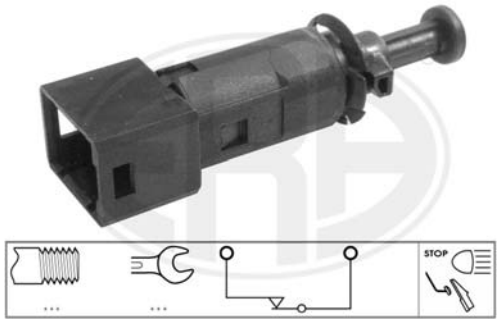

GENERAL MOTORS
9 160 984
NISSAN
25320-00QAB
OPEL
44 14 063, 45 00 684
RENAULT
77 00 414 986

DACIA
LOGAN, LOGAN MCV, SANDERO
NISSAN
INTERSTAR, KUBISTAR, PRIMASTAR
OPEL
MOVANO, VIVARO
RENAULT
CLIO, KANGOO, LOGAN, MASTER, SANDERO, THALIA, TRAFIC II, TWINGO
VAUXHALL
MOVANO, VIVARO

Note: Number of ports : 2

330708 - BRAKE LIGHT SWTCH

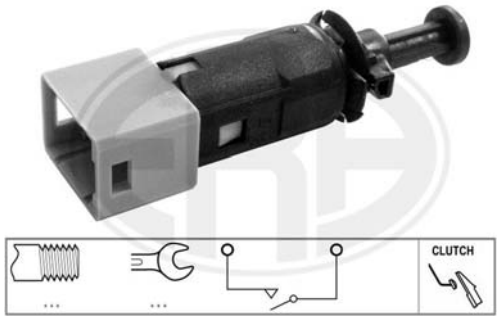

GENERAL MOTORS
91 166 991
NISSAN
25320-00QAC
OPEL
44 08 512
RENAULT
77 00 431 512, 82 00 110 894

NISSAN
INTERSTAR, KUBISTAR, PRIMASTAR
OPEL
MOVANO, VIVARO
RENAULT
CLIO, ESPACE, KANGOO, LAGUNA, MASTER, MEGANE, SCENIC, TRAFIC II
VAUXHALL
MOVANO, VIVARO

Note: Number of ports : 2

330710 - BRAKE LIGHT SWTCH

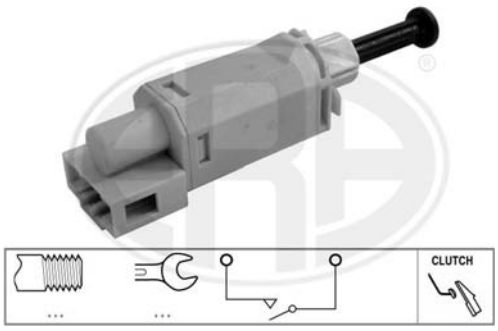

VW
1J0 927 189 B, 1J0 927 189 C

AUDI
TT
VW
BORA, GOLF, NEW BEETLE

Note: Number of ports : 2

330711 - BRAKE LIGHT SWTCH

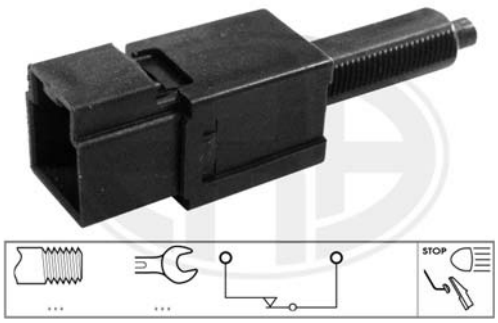

NISSAN
25320-4M400, 25320-4M40A
RENAULT
25 32 04M 400

INFINITI
FX
NISSAN
350 Z, ALMERA, ALMERA TINO, CUBE, JUKE, MAXIMA QX, MICRA, MICRA C+C, MURANO, NAVARA, NOTE, NV200, NV200 EVALIA, PATHFINDER, PRIMERA, QASHQAI, TIIDA, X-TRAIL
RENAULT
KOLEOS

Note: Number of ports : 2

330712 - BRAKE LIGHT SWTCH

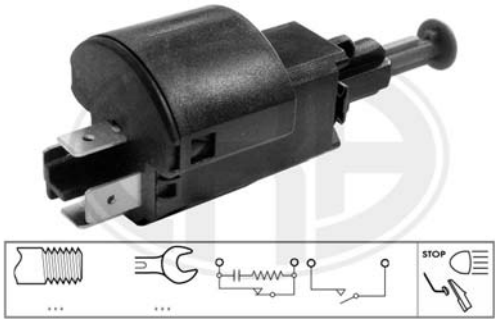

GENERAL MOTORS
9 175 172
OPEL
12 39 448

OPEL
VECTRA
VAUXHALL
VECTRA

Note: Number of ports : 4

330713 - BRAKE LIGHT SWTCH

CITROENPEUGEOT
4534 37
FIAT
9643184680

CITROËN
C3, C5, C8, JUMPY
FIAT
ULYSSE
LANCIA
PHEDRA
PEUGEOT
206, 307, 607, 807, EXPERT

Note: Number of ports : 2

330714 - BRAKE LIGHT SWTCH

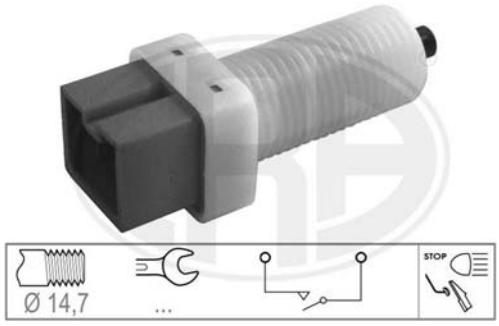

CITROENPEUGEOT
1628 7P

PEUGEOT
406

Note: Number of ports : 2

330715 - BRAKE LIGHT SWTCH

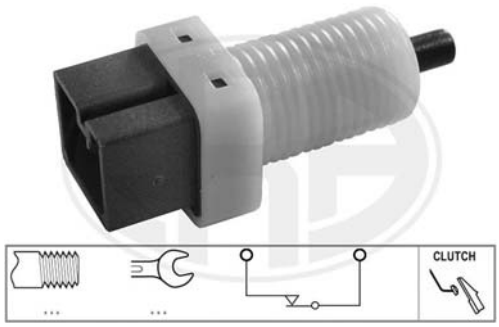

CITROENPEUGEOT
4534 28
FIAT
9639888380

CITROËN
C8, EVASION, JUMPY
FIAT
SCUDO, ULYSSE
LANCIA
PHEDRA
PEUGEOT
206, 206+, 406, 607, 806, 807, EXPERT, EXPERT Tepee

Note: Number of ports : 2

330716 - BRAKE LIGHT SWTCH

CITROENPEUGEOT
4534 44, 96 346 679 80

CITROËN
BERLINGO, XSARA
PEUGEOT
206, 206+, PARTNER

Note: Number of ports : 2

330717 - BRAKE LIGHT SWTCH

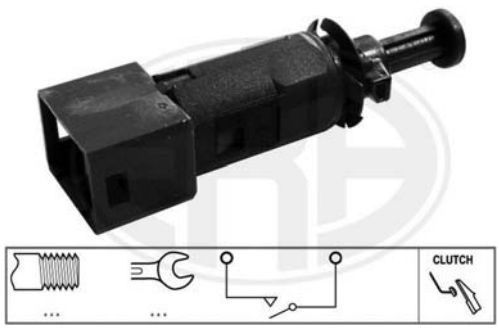

MITSUBISHI
MR977585
NISSAN
25320-00QAD
RENAULT
77 00 434 561, 82 00 110 895
SMART
454 545 03 14

MITSUBISHI
COLT, COLT CZC
NISSAN
KUBISTAR
RENAULT
CLIO, ESPACE, KANGOO, LAGUNA, MEGANE, SCENIC
SMART
FORFOUR

Note: Number of ports : 2

	Suitable to:	Used on:
330718 - BRAKE LIGHT SWTCH 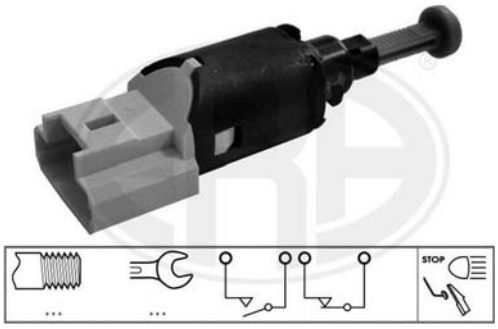	**CITROENPEUGEOT** 4534 40, 96 434 788 80	**CITROËN** BERLINGO, C2, C3, C5, XSARA, XSARA PICASSO **PEUGEOT** 1007, 206, 206+, 307, 607, PARTNER
Note: Number of ports : 4		
330719 - BRAKE LIGHT SWTCH	**NISSAN** 25320-AX000, 25320-AX00A, 25320-AX00B, 25320-AX00C, 25320-AX00E, 25320-JN00A, 25320-WL000	**INFINITI** FX, M35, M45 **NISSAN** 350 Z, 370 Z, 370 Z Roadster, CUBE, GT-R, JUKE, MICRA, MICRA C+C, MURANO, NAVARA, NOTE, PATHFINDER, QASHQAI, TEANA, TERRANO, TIIDA, X-TRAIL **RENAULT** KOLEOS
Note: Number of ports : 4		
330720 - BRAKE LIGHT SWTCH 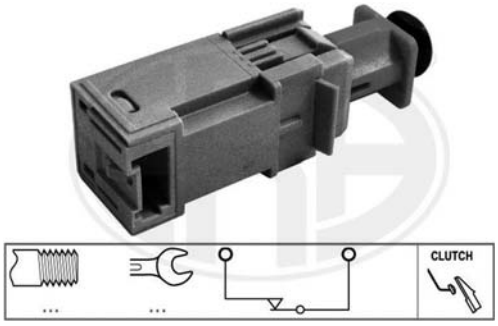	**FIAT** 55701396, 71746722 **GENERAL MOTORS** 09 185 907, 55 701 396, 9 185 907 **OPEL** 62 39 120, 62 40 187 **SAAB** 55 701 396, 91 85 907 **SUZUKI** 37740-83E00-000	**FIAT** GRANDE PUNTO, SEDICI **OPEL** AGILA, ASTRA, ASTRA F CLASSIC, ASTRA H, COMBO, CORSA, MERIVA, SIGNUM, TIGRA, VECTRA, ZAFIRA **SAAB** 9-3 **SUZUKI** IGNIS, SPLASH, SWIFT, SX4, WAGON R, WAGON R+ **VAUXHALL** AGILA, ASTRA, ASTRA TwinTop, ASTRAVAN, COMBO, CORSA, CORSAVAN, MERIVA, SIGNUM, TIGRA, VECTRA, ZAFIRA
Note: Number of ports : 2		
330721 - BRAKE LIGHT SWTCH 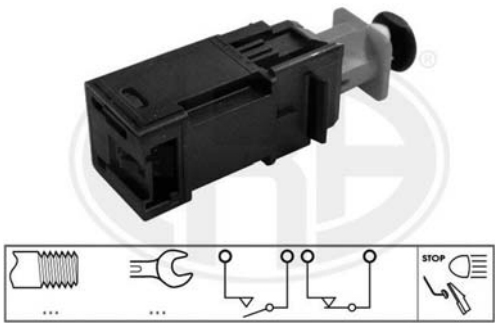	**CITROENPEUGEOT** 6366 F1 **FIAT** 55701395 **GENERAL MOTORS** 09 185 906, 13 178 792, 55 701 395 **OPEL** 62 40 180, 62 40 328, 62 40 462 **SAAB** 91 85 906	**CITROËN** NEMO **FIAT** FIORINO, GRANDE PUNTO, QUBO **OPEL** ASTRA, ASTRA H, CORSA, MERIVA, SIGNUM, VECTRA, ZAFIRA **PEUGEOT** BIPPER, BIPPER Tepee **SAAB** 9-3 **VAUXHALL** ASTRA, ASTRA TwinTop, ASTRAVAN, CORSA, CORSAVAN, MERIVA, SIGNUM, VECTRA, ZAFIRA
Note: Number of ports : 4		

330722 - BRAKE LIGHT SWTCH

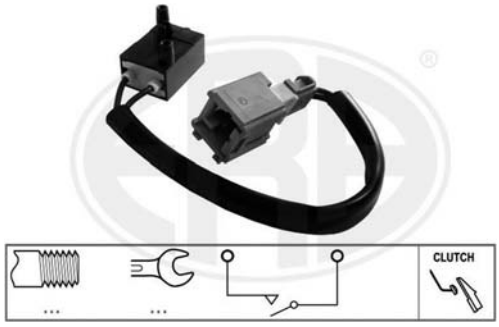

CITROENPEUGEOT
2189 20, 2189 24, 96 528 434 80, 96 639 283 80

CITROËN
BERLINGO, C2, C3, C3 Picasso, C4, C4 Grand Picasso, C4 Picasso, C5, C6, DS3, XSARA PICASSO
PEUGEOT
1007, 207, 207 CC, 207 SW, 3008, 307, 308, 308 CC, 308 SW, 407, 5008, PARTNER, PARTNER Tepee, RCZ

Note: Number of ports : 2

330723 - BRAKE LIGHT SWTCH

CITROENPEUGEOT
4534 54
FIAT
71742588
GENERAL MOTORS
93 194 931
OPEL
47 10 280
SUZUKI
37740-73H10-000, 37740-75H10-000
TOYOTA
84340-09020, 84340-09040, 84340-19025, 84340-49025, 84340-49045, 84340-69015, 84340-69025

CITROËN
C1
FIAT
SEDICI
OPEL
AGILA
PEUGEOT
107
SUZUKI
CARRY, GRAND VITARA, IGNIS, JIMNY, LIANA, SPLASH, SWIFT, SX4
TOYOTA
ALTIS, AURIS, AVENSIS, AVENSIS VERSO, AYGO, CAMRY, CELICA, COROLLA, ESTIMA, HILUX, IQ, LAND CRUISER, LAND CRUISER 150, PICNIC, PREVIA, RAV 4, URBAN CRUISER, YARIS
VAUXHALL
AGILA

Note: Number of ports : 4

330724 - BRAKE LIGHT SWTCH

BMW
6 908 786, 6 908 787, 6 928 031, 6 967 601, 61 31 0 141 214, 61 31 0 150 354, 61 31 0 300 846, 61 31 0 392 294, 61 31 0 398 202, 61 31 0 398 221, 61 31 0 406 809, 61 31 0 412 415, 61 31 4 105 242, 61 31 4 114 226, 61 31 4 114 227, 61 31 6 908 786, 61 31 6 928 031, 61 31 6 957 151, 61 31 6 967 601, 61 31 8 372 646, 61 31 8 372 647, 8 372 647
MERCEDES-BENZ
001 545 63 09

BMW
1, 3, 5, 6, 7, X3, X5, X6, Z4, Z8
MERCEDES-BENZ
C-CLASS, E-CLASS, GLK-CLASS, S-CLASS, SLS AMG
MINI
MINI, MINI CLUBMAN

Note: Number of ports : 4

330725 - BRAKE LIGHT SWTCH

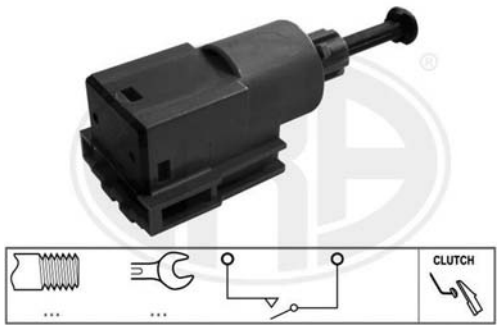

FORD
1108770, 1209514, 1457399, 6M21-9E740-AA, YM21-9E740-AA
VW
1J0 927 189, 1J0 927 189 E, 1J0 927 189 F, 6Q0 927 189, 7H0 927 189, 8E0 927 189 B

AUDI
A3, A4, A6, A6 Allroad, ALLROAD, TT
FORD
GALAXY
SEAT
ALHAMBRA, ALTEA, ALTEA XL, AROSA, CORDOBA, EXEO, IBIZA, LEON, TOLEDO
SKODA
FABIA, OCTAVIA, ROOMSTER, ROOMSTER Praktik, SUPERB
VW
BORA, FOX, GOLF, LUPO, MULTIVAN, NEW BEETLE, PASSAT, PHAETON, POLO, SHARAN, SPACEFOX, TOURAN, TRANSPORTER

Note: Number of ports : 2

330726 - BRAKE LIGHT SWTCH

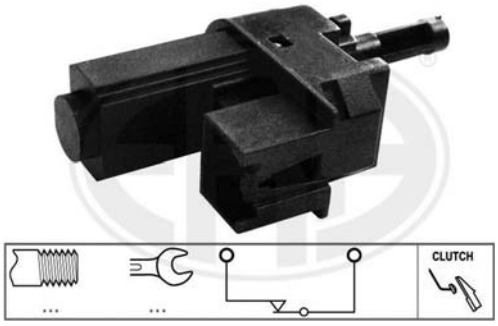

FORD
1230986, 1343269, 4M5T-7C534-AA
VOLVO
30752408, 8691593

FORD
C-MAX, FIESTA, FOCUS, FOCUS C-MAX, GALAXY, KUGA, MONDEO, S-MAX, TOURNEO CONNECT, TRANSIT CONNECT
VOLVO
C30, C70, S40, S80, V50, V70, XC70

Note: Number of ports : 2

330727 - BRAKE LIGHT SWTCH

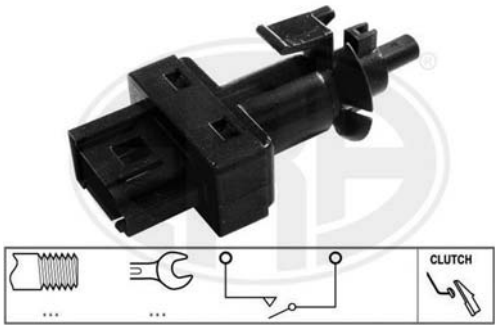

MERCEDES-BENZ
004 545 21 14, 006 545 10 14
VW
2E0 907 457, 2E0 907 457 A

MERCEDES-BENZ
A-CLASS, B-CLASS, C-CLASS, CLC-CLASS, CLK, E-CLASS, GLK-CLASS, M-CLASS, SLK, SPRINTER, SPRINTER 2-t, SPRINTER 3-t, V-CLASS, VANEO, VIANO, VITO, VITO / MIXTO
VW
CRAFTER 30-35, CRAFTER 30-50

Note: Number of ports : 2

330728 - BRAKE LIGHT SWTCH

GENERAL MOTORS
93 851 952
NISSAN
25320-00QAE
OPEL
44 14 818
RENAULT
25 32 500 07R, 82 00 168 240, 82 00 276 360

NISSAN
KUBISTAR, PRIMASTAR
OPEL
VIVARO
RENAULT
CLIO, CLIO Grandtour, ESPACE, FLUENCE, GRAND SCENIC, LAGUNA, MEGANE, SCENIC, THALIA, TRAFIC II, TWINGO, VEL SATIS
VAUXHALL
VIVARO

Note: Number of ports : 2

330729 - BRAKE LIGHT SWTCH

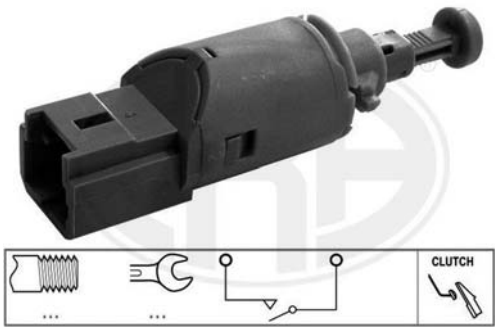

GENERAL MOTORS
93 197 677
OPEL
44 19 589
RENAULT
25 32 500 06R, 82 00 168 239, 82 00 276 359

RENAULT
CLIO, CLIO Grandtour, ESPACE, GRAND SCENIC, KANGOO, KANGOO BE BOP, LAGUNA, MASTER, MEGANE, MODUS, SCENIC, TWINGO, VEL SATIS
VAUXHALL
MOVANO

Note: Number of ports : 2

330730 - BRAKE LIGHT SWTCH

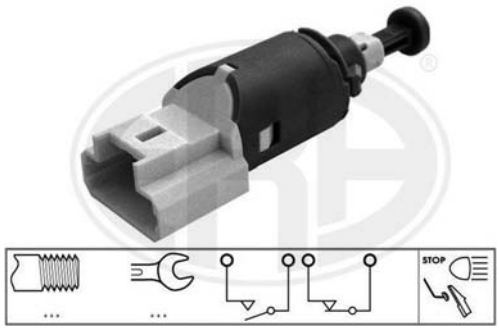

GENERAL MOTORS
93 197 675
OPEL
44 19 587
RENAULT
82 00 168 238

RENAULT
GRAND SCENIC, KANGOO, KANGOO BE BOP, MASTER, MEGANE, MODUS, SCENIC, TWINGO
VAUXHALL
MOVANO

Note: Number of ports : 4

330731 - BRAKE LIGHT SWTCH

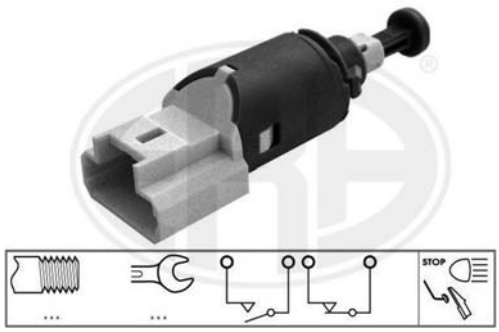

RENAULT
82 00 276 361

DACIA
DUSTER, LOGAN, LOGAN MCV, SANDERO
RENAULT
CLIO, CLIO Grandtour, ESPACE, LAGUNA, LOGAN, MODUS, SANDERO, TWINGO, VEL SATIS

Note: Number of ports : 4

330733 - BRAKE LIGHT SWTCH

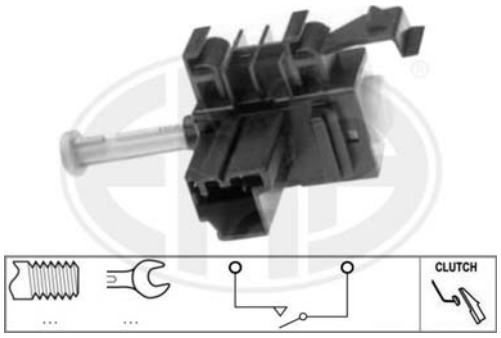

FORD
1439868, 6G9T-11A152-AA
VOLVO
30773748

FORD
C-MAX, FOCUS, GALAXY, KUGA, MONDEO, S-MAX
VOLVO
S80, V70, XC70

Note: Number of ports : 2

330734 - BRAKE LIGHT SWTCH

FORD
1224326, 1227340, 1677533, 3M5T-9C872-AB, 3M5T-9C872-AC, 4832219, AA6T-9C872-AA
JAGUAR
C2C 18352, C2S 46706
MAZDA
B R1A 66 470
VOLVO
30773936

FORD
C-MAX, FIESTA, FOCUS, FOCUS C-MAX, FUSION, GALAXY, KUGA, MONDEO, S-MAX, TOURNEO CONNECT, TRANSIT, TRANSIT CONNECT, TRANSIT TOURNEO
JAGUAR
S-TYPE, X-TYPE, XJ
MAZDA
2, 3
VOLVO
S80, V70, XC70

Note: Number of ports : 2

330735 - BRAKE LIGHT SWTCH

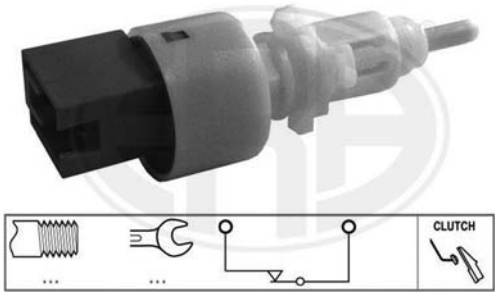

FIAT
51831054

FIAT
500, 500 C, PANDA

Note: Number of ports : 2

330736 - BRAKE LIGHT SWTCH

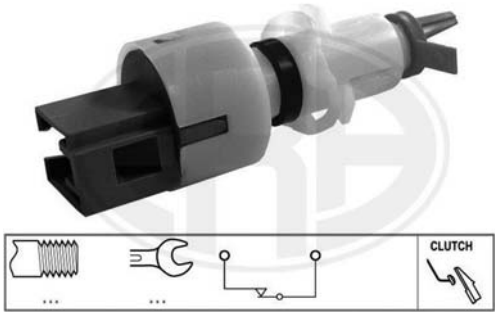

CITROENPEUGEOT
2189 25
FIAT
51824727

CITROËN
NEMO
FIAT
FIORINO, QUBO
PEUGEOT
BIPPER, BIPPER Tepee

Note: Number of ports : 2

330737 - BRAKE LIGHT SWTCH

MERCEDES-BENZ
001 545 44 09, 001 545 67 09
VW
2E0 945 515 A

MERCEDES-BENZ
A-CLASS, B-CLASS, CLS, E-CLASS, SPRINTER, VIANO, VITO, VITO / MIXTO
VW
CRAFTER 30-35, CRAFTER 30-50

Note: Number of ports : 4

330738 - BRAKE LIGHT SWTCH

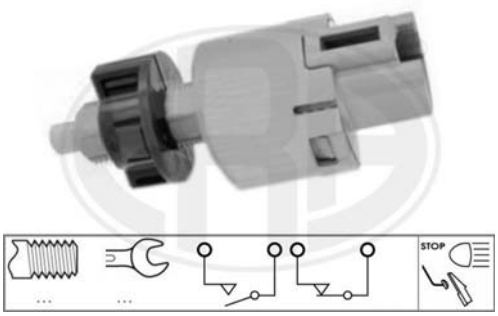

CITROENPEUGEOT
4534 68
MITSUBISHI
8614A111
TOYOTA
84340-69075

CITROËN
C-CROSSER
MITSUBISHI
ASX, OUTLANDER
PEUGEOT
4007
TOYOTA
AVENSIS, COROLLA, ESTIMA, LAND CRUISER, LAND CRUISER 150, PREVIA, PRIUS, RAV 4, VERSO, YARIS

Note: Number of ports : 4

330739 - BRAKE LIGHT SWTCH

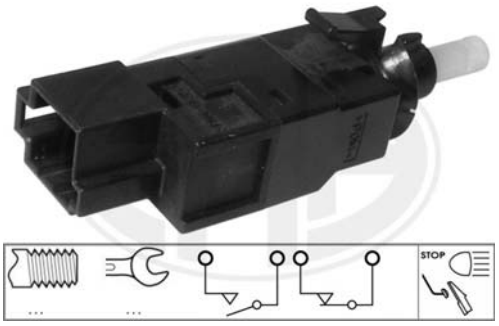

MERCEDES-BENZ
001 545 20 09, 001 545 38 09, 001 545 87 09

MERCEDES-BENZ
A-CLASS, B-CLASS, C-CLASS, M-CLASS, SPRINTER, SPRINTER 2-t, SPRINTER 3-t, V-CLASS, VANEO, VIANO, VITO, VITO / MIXTO

Note: Number of ports : 4

330740 - BRAKE LIGHT SWTCH

FORD
1223089, 1227338, 3M5T-11A152-AB
VOLVO
8691591

FORD
C-MAX, FIESTA, FOCUS, FOCUS C-MAX, GALAXY, S-MAX
VOLVO
C30, C70, S40, V50

Note: Number of ports : 2

330741 - BRAKE LIGHT SWTCH

OPEL
47 06 296
SUZUKI
37740-80G10-000

OPEL
AGILA
SUZUKI
ALTO, CARRY, IGNIS, JIMNY, LIANA, WAGON R, WAGON R+
VAUXHALL
AGILA

Note: Number of ports : 4

TEMPERATURE TRANSMITTERS AND RADIATOR FAN SWITCHES

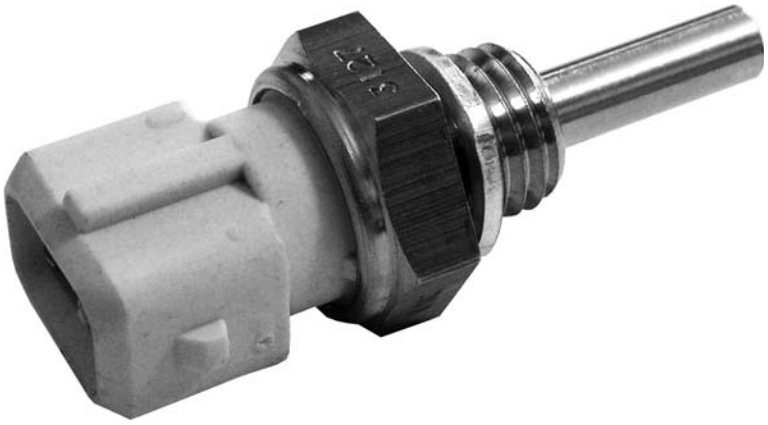

	page
Sender Unit, Oil Temperature	543
Sender Unit, Coolant Temperature	545
Temperature Switch, Coolant Warning Lamp	593
Temperature Switch, Radiator Fan	595

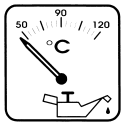

Sender Unit, Oil Temperature

Sensore Temperatura Olio

Capteur, température d'huile

Sensor, Öltemperatur

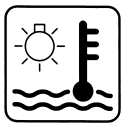

Sender Unit, Coolant Temperature

Sensore, Temperatura Refrigerante

Sonde de température, liquide de refroidissement

Sensor, Kühlmitteltemperatur

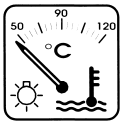

Temperature Switch, Coolant Warning Lamp

Termocontatto, Spia Segnalazione Refrigerante

Contact thermique, voyant avertisseur de l'agent réfrigérant

Temperaturschalter, Kühlmittelwarnlampe

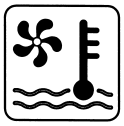

Temperature Switch, Radiator Fan

Termocontatto, Ventola Radiatore

Interrupteur de température, ventilateur de radiateur

Temperaturschalter, Kühlerlüfter

ERA S.p.A. - April 2012

330123 - SENDER UNIT, OIL TEMPERATURE

FORD
7203359, 95VW-10A998-AA
VW
1H0 919 563

FORD
GALAXY
SEAT
ALHAMBRA, CORDOBA, IBIZA, INCA, LEON, TOLEDO
SKODA
OCTAVIA
VW
BORA, CADDY, CORRADO, GOLF, PASSAT, POLO, SHARAN, TRANSPORTER, VENTO

Note:

330137 - SENDER UNIT, OIL TEMPERATURE

CITROENPEUGEOT
1338 C7, 1338 F9
FIAT
46469865, 46472179, 60814715, 99455420
HONDA
37870 PLZ D00, 37870 RBD E01
IVECO
500 382 599
OPEL
12 566 778, 13 38 467, 13 38 511, 62 38 266, 90 541 937, 93 174 208
RENAULT
50 10 412 450

ALFA ROMEO
145, 146, 156, 159, 166, BRERA, SPIDER
CITROËN
JUMPER
FIAT
BRAVA, BRAVO, DUCATO, MAREA, MULTIPLA
HONDA
ACCORD, CIVIC, CR-V, FR-V
IVECO
DAILY II, DAILY III
IVECO
EuroStar, Trakker
LANCIA
KAPPA, LYBRA
OPEL
AGILA, ANTARA, ASTRA, ASTRA F CLASSIC, COMBO, CORSA, FRONTERA, MERIVA, OMEGA, SIGNUM, SINTRA, SPEEDSTER, TIGRA, VECTRA, ZAFIRA
PEUGEOT BOXER
RENAULT TRUCKS Kerax, Midlum, Premium
SAAB 9-3, 9-5, 900, 9000

Note: Number of ports : 2

330316 - SENDER UNIT, OIL TEMPERATURE

RENAULT
77 00 808 951
VOLVO
70808951-1

RENAULT
ESPACE, LAGUNA, SAFRANE
VOLVO
S40, V40

Note:

330644 - SENDER UNIT, OIL TEMPERATURE

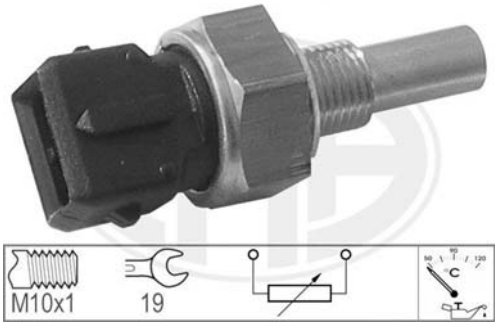

VW
059 919 563

AUDI
A4, A6, A8, ALLROAD, Q7
SKODA
SUPERB
VW
PASSAT

Note: Number of ports : 2

330666 - SENDER UNIT, OIL TEMPERATURE

HYUNDAI
46386-22600
KIA
46386-22600

HYUNDAI
ACCENT, GETZ, MATRIX, SANTAMO, SONATA

Note: Number of ports : 2

330687 - SENDER UNIT, OIL TEMPERATURE

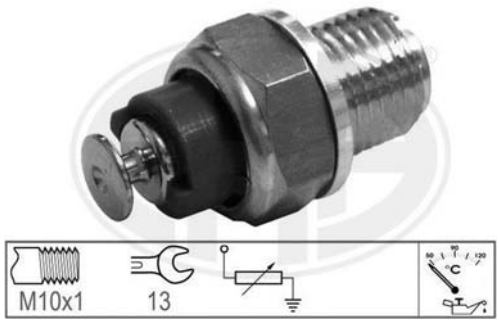

VW
049 919 563 B

AUDI
100, 80, A4, A6, A8, COUPE
VW
PASSAT

Note:

330082 - SENDER UNIT, COOLANT TEMPERATURE

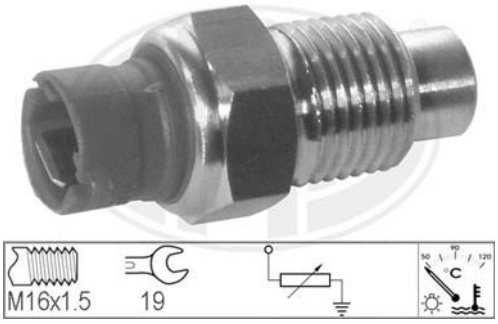

ALFA ROMEO
60813687
FIAT
4067872, 4108672, 4276954, 4349082, 4407984, 4409505, 4414600, 4448131, 7588802, 7588882
LADA
2101-3808600

ALFA ROMEO
156
FIAT
124, 126, 127, 131, 132, ARGENTA, BARCHETTA, BRAVA, BRAVO, CINQUECENTO, COUPE, DUCATO, DUNA, ELBA, FIORINO, FIORINO Pick up, MAREA, PALIO, PANDA, PUNTO, REGATA, RITMO, SEICENTO, SIENA, TEMPRA, TIPO, UNO, X 1/9
FSO
126P, POLONEZ
INNOCENTI
ELBA
IVECO
DAILY I
LADA
NIVA, SAMARA
LANCIA
A 112, BETA, PRISMA
SEAT
FURA, RONDA
ZASTAVA
101

Note:

330083 - SENDER UNIT, COOLANT TEMPERATURE

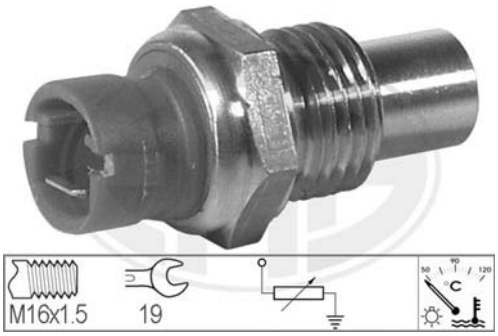

ALFA ROMEO
60515838, 60515839
FIAT
34362106, 4171667
VW
3949879

ALFA ROMEO
6, 75, 90, ALFETTA, GIULIETTA, SPIDER
SEAT
IBIZA, MALAGA

Note:

330084 - SENDER UNIT, COOLANT TEMPERATURE

CITROENPEUGEOT
0242 20
FIAT
7910247507
RENAULT
77 01 348 143, 79 10 245 551, 79 10 245 553

FIAT
DUCATO
PEUGEOT
305
RENAULT
11, 18, 20, 9

Note:

330085 - SENDER UNIT, COOLANT TEMPERATURE

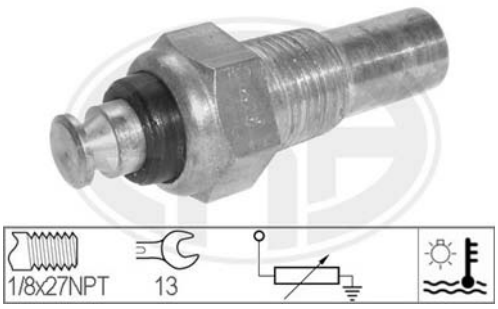

DAEWOO
3439088
OPEL
03 439 088, 12 42 569, 13 38 448, 13 42 561, 13 42 568, 90 246 852, 93 203 244, 94 472 002

DAEWOO
ESPERO
HOLDEN
BARINA
OPEL
AGILA, ASCONA, ASTRA, ASTRA F CLASSIC, CALIBRA, COMBO, CORSA, FRONTERA, KADETT, MANTA, OMEGA, SENATOR, TIGRA, VECTRA

Note: Number of ports : 1

330086 - SENDER UNIT, COOLANT TEMPERATURE

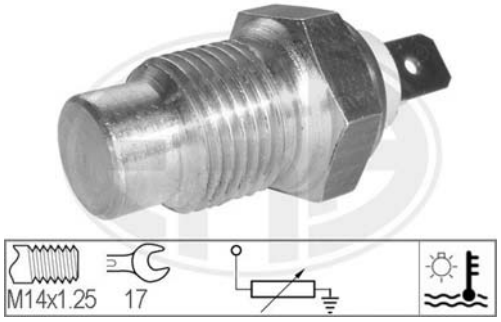

CITROENPEUGEOT
0242 63, 1337 72, 1338 02, 97 509 510, 97 519 138
VOLVO
29 90 857

CITROËN
AX, BX, C15, ZX
FIAT
DUCATO, TALENTO
PEUGEOT
205, 305, 309, 405, 504, 505, 604, J5
TALBOT
SIMCA 1100, SOLARA

Note:

330087 - SENDER UNIT, COOLANT TEMPERATURE

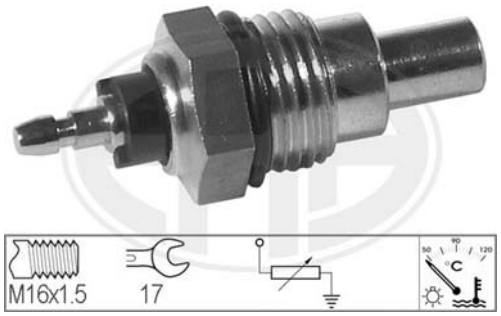

DAIHATSU
83420-87201, 83420-87701
HONDA
37750 611 154
MAZDA
0 118 18 510, 0 118 89 181, 0 27Z 108 84A
MITSUBISHI
MC850107
SUZUKI
34850-65011, 34850-65020, 34850-65021, 34850-78E21

SUZUKI
GRAND VITARA, SJ 410, VITARA

Note:

330088 - SENDER UNIT, COOLANT TEMPERATURE

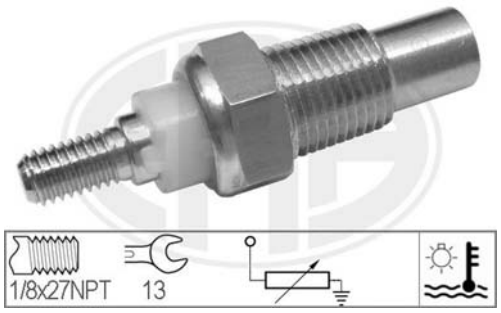

FORD
1591388, 1701341, 6098273, 6122039, 81EB 10884 AA, 84V8 10884 AA, C5EH 10884 B, D1FZ 10884 B

FORD
CAPRI, CORTINA, ESCORT, FIESTA, ORION, P 100, TAUNUS, TRANSIT

Note:

330089 - SENDER UNIT, COOLANT TEMPERATURE

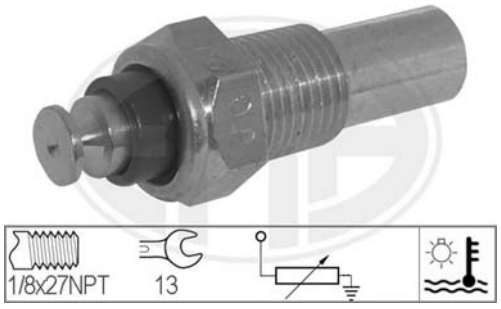

CHEVROLET
96 177 604
DAEWOO
96 177 604
SAAB
88 00 914, 88 59 233, 91 08 291

CHEVROLET
EVANDA, LACETTI, NUBIRA, REZZO
DAEWOO
EVANDA, LACETTI, LANOS, LEGANZA, MATIZ, NEXIA, NUBIRA, REZZO
OPEL
ANTARA
SAAB
90, 900, 9000

Note:

330090 - SENDER UNIT, COOLANT TEMPERATURE

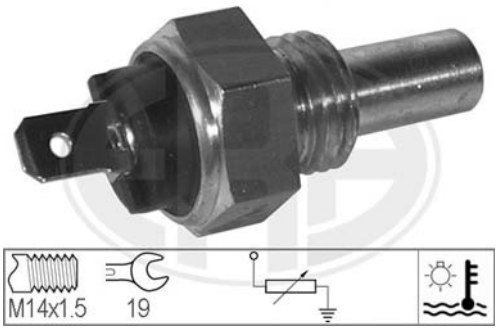

BMW
62 11 0 788 115

BMW
3, 5, 7

Note:

330091 - SENDER UNIT, COOLANT TEMPERATURE

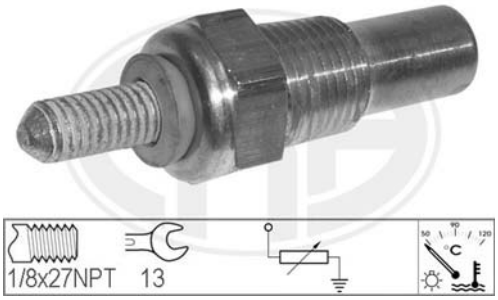

FORD
1583836, 6058836, 6098273, 77FB 10884 AA, 81EB 10884 AA

FORD
ESCORT, FIESTA, ORION

Note:

330092 - SENDER UNIT, COOLANT TEMPERATURE

VOLVO
460191

VOLVO
240, 340-360, 740, 760

Note:

330093 - SENDER UNIT, COOLANT TEMPERATURE

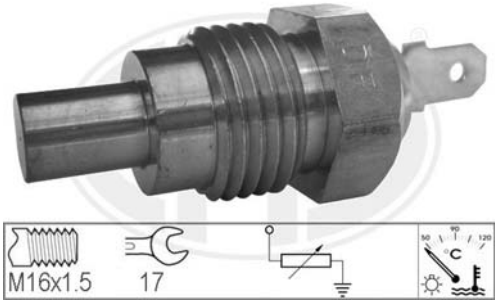

DAIHATSU
83420-16010, 83420-20020
HINO
83420-1060
MITSUBISHI
MA603427, MD001380, MD603427
TOYOTA
83420-16010, 83420-20010, 83420-20020

LEXUS
ES
TOYOTA
4 RUNNER, AVENSIS, CAMRY, CARINA, CELICA, COROLLA, HIACE, HILUX, LAND CRUISER, LAND CRUISER 80, LITEACE, MODELL F, MR 2, PREVIA, SUPRA, TERCEL

Note:

330094 - SENDER UNIT, COOLANT TEMPERATURE

ROVER
623050, GTR101

ROVER
MAESTRO, MINI

Note:

330095 - SENDER UNIT, COOLANT TEMPERATURE

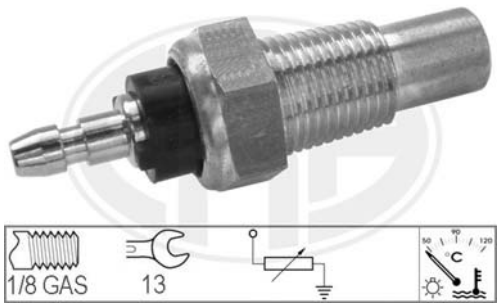

HONDA
37750 PH2 014
KIA
KK150-18-510A, KK150-18-510B
ROVER
EDU1256, GTR184, PEL100230

ACURA
NSX
DAIHATSU
APPLAUSE, CHARADE, CUORE, FEROZA Hard Top, FEROZA Soft Top
HONDA
ACCORD, CIVIC, CONCERTO, CR-V, CRX, HR-V, INTEGRA, LEGEND, NSX, PRELUDE, SHUTTLE
ROVER
400, 600, 800
SUZUKI
ALTO

Note: Number of ports : 1

330096 - SENDER UNIT, COOLANT TEMPERATURE

FORD
1640040, 1784077, 6076967, 81AB 10884 AA, 84AB 10884 BA
ROVER
GTR120, GTR199

AUSTIN
MONTEGO
FORD
ESCORT, FIESTA, ORION
ROVER
200, 400, MAESTRO, MONTEGO

Note:

330097 - SENDER UNIT, COOLANT TEMPERATURE

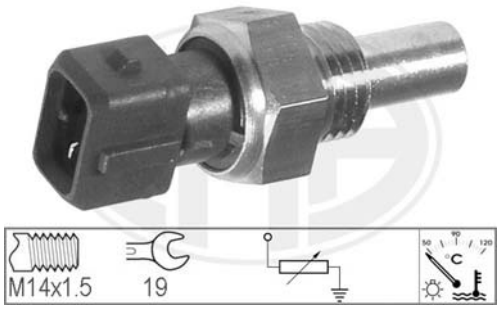

BMW
12 62 1 710 511, 12 62 1 710 512
LAND ROVER
STC2253

BMW
3, 5, 7, Z1
LAND ROVER
RANGE ROVER

Note:

Suitable to: Used on:

330098 - SENDER UNIT, COOLANT TEMPERATURE

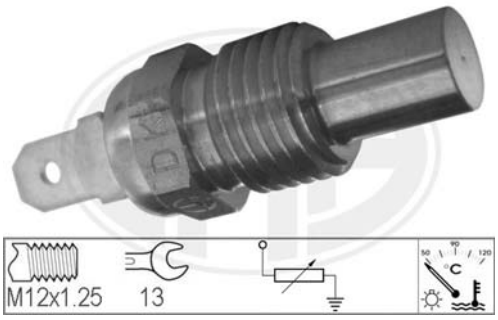

NISSAN
25080-89903, 25080-F3900
SUBARU
25080-89903

INFINITI
G20, J30, M30, Q45
NISSAN
100 NX, 200 SX, 300 ZX, BLUEBIRD, CABSTAR, MAXIMA, PATROL GR, PRAIRIE PRO, PRIMERA, SUNNY, TERRANO, URVAN, VANETTE

Note:

330099 - SENDER UNIT, COOLANT TEMPERATURE

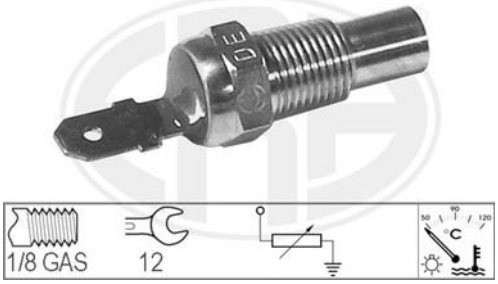

SUZUKI
34850-50A00, 34850-82000, 34850-82001, 34850-82002

MARUTI
800
SUZUKI
ALTO, SJ 413, SUPER CARRY, SWIFT, VITARA

Note:

330100 - SENDER UNIT, COOLANT TEMPERATURE

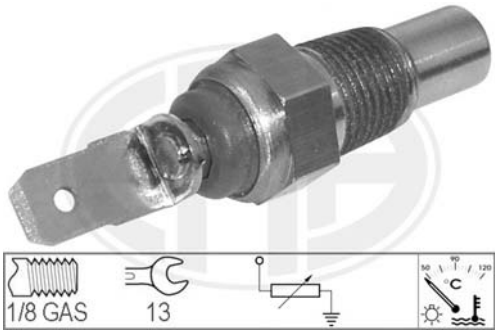

DAIHATSU
83420-87703
HYUNDAI
94650-32500, 94650-32510, 94650-32520
ISUZU
8-94247-437-1
KIA
KK370 18510
MAZDA
B 541 18 51X, K L01 18 51X
MITSUBISHI
MD091056
SUZUKI
34850-82011, 34850-82012
TOYOTA
83420-16020, 83420-16030

DAIHATSU
APPLAUSE, CHARADE, CUORE, FEROZA Hard Top, FEROZA Soft Top, MOVE, ROCKY Hard Top, ROCKY Soft Top
HOLDEN
APOLLO
HYUNDAI
ACCENT, COUPE, GALLOPER, LANTRA, PONY, PONY/EXCEL, S COUPE, SANTAMO, SONATA, XG
KIA
AVELLA, BESTA, CARENS, CARNIVAL, CLARUS, JOICE, K2700, PREGIO, RETONA, SEPHIA, SHUMA, SPORTAGE
LEXUS
ES, LS
MAZDA
323 C, 323 F, 323 P, 323 S, BT-50, E-SERIE, MX-3, MX-6, RX 7, XEDOS 9
MITSUBISHI
3000 GT, CARISMA, COLT, ECLIPSE, GALANT, GRANDIS, L 200, L 300, L 400, LANCER, OUTLANDER, PAJERO, PAJERO CLASSIC, PAJERO PININ, PAJERO SPORT, SPACE GEAR, SPACE RUNNER, SPACE STAR, SPACE WAGON
OPEL
CAMPO, FRONTERA, MONTEREY
PIAGGIO
PORTER
SUBARU
FORESTER, IMPREZA, LEGACY
SUZUKI
SUPER CARRY, SWIFT, VITARA, X-90
TOYOTA
4 RUNNER, CAMRY, CARINA, CELICA, COROLLA, LAND CRUISER 90, MR 2, PASEO, STARLET

Note:

	Suitable to:	Used on:
330101 - SENDER UNIT, COOLANT TEMPERATURE 	**FORD** 6108298, 6113258, 6136366, 6141932, 6146864, 84DA 10884 AA, 85FB 10884 AA, 86AB 10884 AA	**FORD** ESCORT, FIESTA, ORION, SIERRA, TRANSIT
Note:		
330102 - SENDER UNIT, COOLANT TEMPERATURE 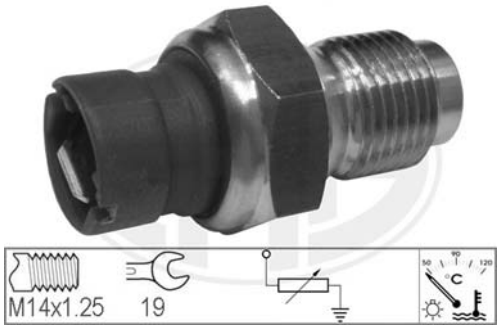 	**FIAT** 7548005, 7588883	**FIAT** FIORINO, PANDA, TIPO, UNO
Note:		
330103 - SENDER UNIT, COOLANT TEMPERATURE 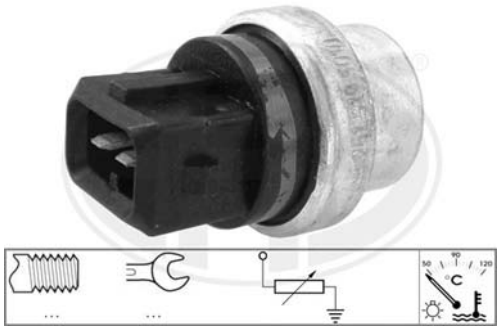	**FORD** 1669949, 95VW 10884 BA **VW** 251 919 501 A, 251 919 501 D	**AUDI** 80, 90 **FORD** GALAXY **SEAT** ALHAMBRA, CORDOBA, IBIZA, TOLEDO **VW** CADDY, CORRADO, DERBY, GOLF, JETTA, LT 28-35, LT 40-55, PASSAT, POLO, SCIROCCO, SHARAN, TRANSPORTER, VENTO
Note:		
330104 - SENDER UNIT, COOLANT TEMPERATURE 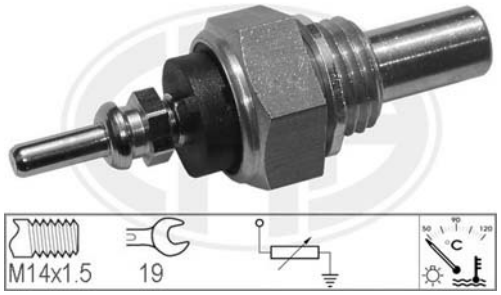 	**MERCEDES-BENZ** 002 542 25 17, 005 542 10 17, 005 542 26 17, 661 542 30 17 **VW** 2D0 919 501 C	**DAEWOO** KORANDO, MUSSO **MERCEDES-BENZ** 100, 190, C-CLASS, CABRIOLET, COUPE, E-CLASS, G-CLASS, KOMBI, S-CLASS, SL, SPRINTER, SPRINTER 2-t, SPRINTER 3-t, T1, V-CLASS, VITO **PUCH** G-MODELL **SSANGYONG** KORANDO **VW** LT 28-35, LT 28-46
Note:		

ERA S.p.A. Moncalieri (TO) Italy - tel: +39 011 6891511 - fax: +39 011 6472862 - www.eranet.it

330105 - SENDER UNIT, COOLANT TEMPERATURE

VOLVO
1362645, 1362645-2

VOLVO
740, 760, 940, 960

Note:

330106 - SENDER UNIT, COOLANT TEMPERATURE

ALFA ROMEO
60504210

ALFA ROMEO
145, 146, 155, 164, 33, 75

Note:

330107 - SENDER UNIT, COOLANT TEMPERATURE

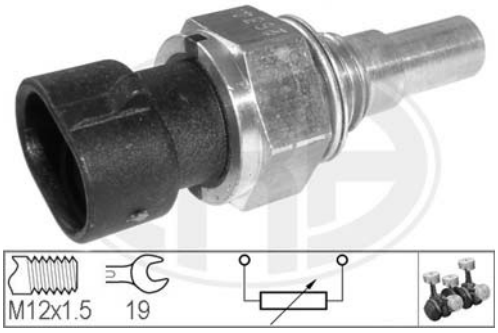

ALFA ROMEO
60811520
DAEWOO
96 181 508, 96 182 634
FIAT
55199579, 7778980
ISUZU
8-12191170-0, 8-15404280-0
OPEL
12 146 897, 12 191 170, 13 38 441, 13 38 477, 13 41 856, 15 326 388, 8 50 413

ALFA ROMEO
145, 146
CHEVROLET
AVEO, EVANDA, KALOS, LACETTI, MATIZ, NUBIRA, REZZO
DAEWOO
ESPERO, EVANDA, KALOS, LACETTI, LANOS, LEGANZA, MATIZ, NEXIA, NUBIRA, REZZO
FIAT
CROMA, PUNTO, TEMPRA
LANCIA
DEDRA
OPEL
ANTARA, ASTRA, CORSA, FRONTERA, GT, KADETT, SIGNUM, SPEEDSTER, VECTRA, ZAFIRA
RENAULT
ESPACE, VEL SATIS

Note: Number of ports : 2

330108 - SENDER UNIT, COOLANT TEMPERATURE

RENAULT
74 39 186 486
VOLVO
3545031-1, 9186486-8

RENAULT
LAGUNA, SAFRANE
VOLVO
850, 960, C70, S40, S70, S90, V40, V70, V90

Note:

330109 - SENDER UNIT, COOLANT TEMPERATURE

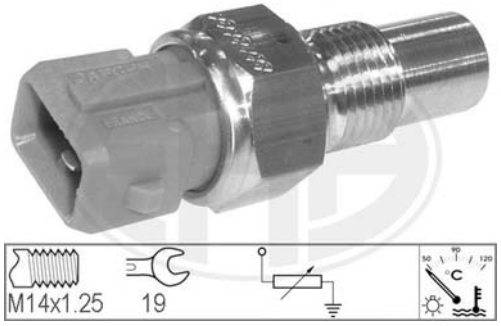

CITROENPEUGEOT
1338 09, 96 018 426
FIAT
9601842680

CITROËN
BERLINGO, EVASION, JUMPER, JUMPY, XANTIA, XM, XSARA, ZX
FIAT
DUCATO, SCUDO, ULYSSE
HYUNDAI
LANTRA
LANCIA
ZETA
PEUGEOT
106, 306, 309, 405, 406, 605, 806, BOXER, EXPERT, PARTNER

Note: Number of ports : 1

330110 - SENDER UNIT, COOLANT TEMPERATURE

CITROENPEUGEOT
1920 C4, 95 640 493
FIAT
9564949380

CITROËN
AX, BX, XM, ZX
PEUGEOT
106, 205, 306, 405, 605

Note: Number of ports : 2

330111 - SENDER UNIT, COOLANT TEMPERATURE

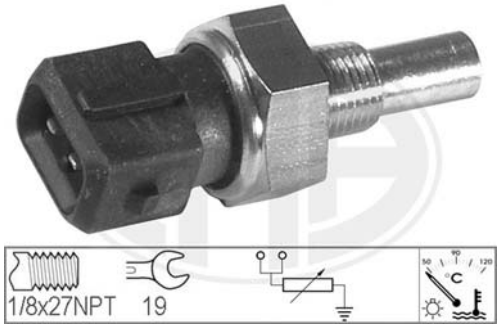

ROVER
GTR 179, YCB 10004

ROVER
100 (METRO), 200, 400, 800, CABRIOLET

Note:

330112 - SENDER UNIT, COOLANT TEMPERATURE

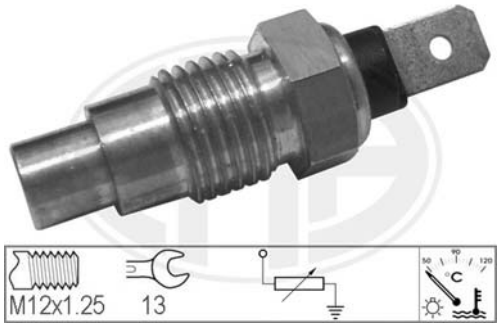

NISSAN
25080-70J00

NISSAN
ALMERA, ALMERA TINO, MICRA, PRIMERA, TERRANO

Note:

330113 - SENDER UNIT, COOLANT TEMPERATURE

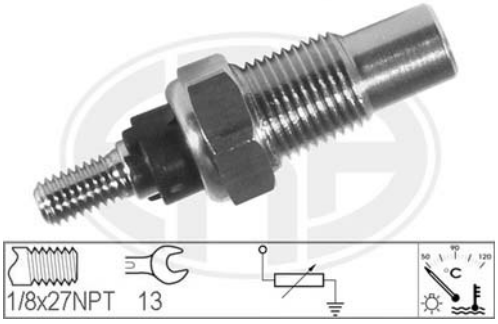

FORD
6145143, 86VB 10884 BA

FORD
ESCORT, ESCORT CLASSIC, FIESTA, MONDEO, ORION, P 100, SCORPIO, SIERRA

Note:

330114 - SENDER UNIT, COOLANT TEMPERATURE

VW
251 919 501

VW
GOLF, JETTA, PASSAT, POLO

Note:

330115 - SENDER UNIT, COOLANT TEMPERATURE

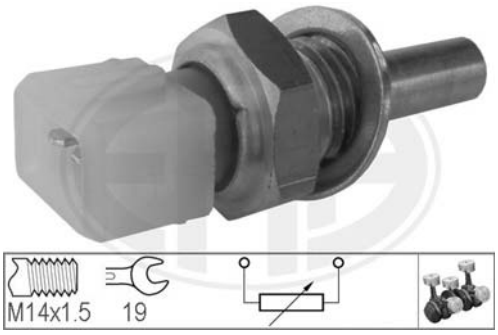

BMW
12 62 1 288 158, 13 62 1 707 366
FORD
1626473, V85SF 12A648 AA
KHD
4199333
SUZUKI
37620 30B3
VW
035 919 369 M

AUDI
100, 80, 90, A6, A8, CABRIOLET, COUPE, V8
BMW
3, 5, 7, 8
FORD
ESCORT
SEAT
TOLEDO
VOLVO
850, S70, S80, V70
VW
GOLF, JETTA

Note: Number of ports : 2

330116 - SENDER UNIT, COOLANT TEMPERATURE

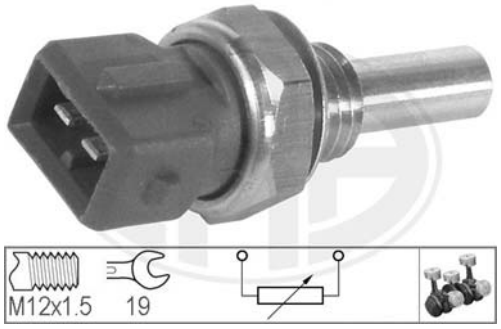

BMW
13 62 1 284 397, 13 62 1 709 966
CITROENPEUGEOT
0242 46, 91 040 370, 91 414 549
FERRARI
125769, 172750
FIAT
46125769, 5972332, 60513205, 60800167, 60808142
HYUNDAI
39220-22000
IVECO
5972332, 98424793
KIA
0K737-18-840
MITSUBISHI
AW311467
OPEL
13 38 444, 90 018 835, 90 080 939, 90 410 792, 93 358 883
PORSCHE
944 606 125 00
RENAULT
77 00 267 388
ROVER
ERR 2081
SAAB
9357021
VOLVO
1332396
VW
025 906 041, 026 906 161, 6U0 919 501

ALFA ROMEO
145, 146, 155, 164, 33, 75, GTV, RZ, SPIDER
BMW
3, 5, 7, Z1
CITROËN
AX, BX, C15, JUMPY, XM, ZX
FIAT
BARCHETTA, BRAVA, BRAVO, COUPE, CROMA, ELBA, FIORINO, MAREA, PANDA, PUNTO, SCUDO, TIPO, UNO
FORD
TRANSIT
HOLDEN
ASTRA, BARINA
HONDA
ACCORD
HYUNDAI
ACCENT, COUPE, LANTRA, S COUPE
INNOCENTI
ELBA
IVECO
DAILY I
LANCIA
KAPPA, THEMA, Y, Y10
LAND ROVER
DEFENDER, DISCOVERY, FREELANDER
MG
MG ZR
OPEL
ASCONA, ASTRA, ASTRA F CLASSIC, CALIBRA, CAMPO, COMBO, CORSA, FRONTERA, KADETT, OMEGA, SENATOR, SINTRA, TIGRA, VECTRA
PEUGEOT
106, 205, 306, 309, 405, 605, EXPERT
PORSCHE
911, 968
ROVER
200, 25, 400, 45, 600
SAAB
900, 9000
SEAT
TOLEDO
SKODA
FAVORIT
TOYOTA
AVENSIS, CARINA
VOLVO
240, 740, 760
VW
CADDY, GOLF

Note: Number of ports : 2

330117 - SENDER UNIT, COOLANT TEMPERATURE

CHEVROLET
25 036 979
DAEWOO
25 036 979
FIAT
7604097
GENERAL MOTORS
15 326 386
OPEL
12 36 302, 13 38 450, 62 38 236

DAEWOO
ESPERO
LANCIA
DELTA
OPEL
ASTRA, COMBO, CORSA, FRONTERA, MERIVA, MONTEREY, OMEGA, SIGNUM, VECTRA

Note:

	Suitable to:	Used on:
330118 - SENDER UNIT, COOLANT TEMPERATURE 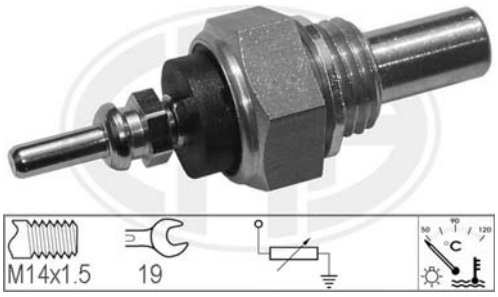 	**MERCEDES-BENZ** 005 545 03 24	**MERCEDES-BENZ** 100, 190, C-CLASS, E-CLASS, G-CLASS, KOMBI, T1 **PUCH** G-MODELL
Note:		
330119 - SENDER UNIT, COOLANT TEMPERATURE 	**FORD** 1657685, 89FB 10884 AA	**FORD** ESCORT, FIESTA, KA, ORION, PUMA, SCORPIO, SIERRA, TRANSIT
Note:		
330120 - SENDER UNIT, COOLANT TEMPERATURE 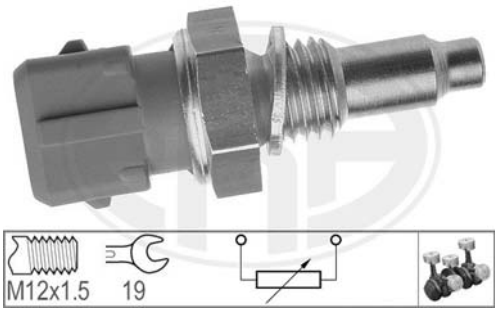 	**ALFA ROMEO** 60806379, 60813751 **CITROENPEUGEOT** 1338 A5 **FIAT** 46477022, 4850371, 7547977 **FORD** 1639283, V86HF-12A648-AA **OPEL** 13 42 850, 45 00 001	**ALFA ROMEO** 145, 146, 155 **FIAT** BRAVO, CINQUECENTO, CROMA, DUCATO, MAREA, PANDA, SEICENTO, STRADA **FORD** ESCORT **LANCIA** DEDRA, DELTA, THEMA, Y **OPEL** ASTRA, MOVANO, VECTRA **PEUGEOT** BOXER **VAUXHALL** ASTRA, CALIBRA, OMEGA
Note:		
330121 - SENDER UNIT, COOLANT TEMPERATURE 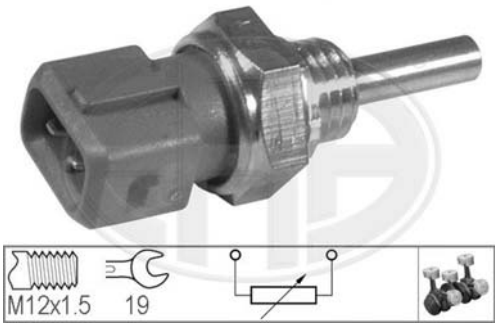 	**BMW** 13 62 2 242 184 **FIAT** 6081220, 6081224, 7738223 **JAGUAR** DAC 4737 **SAAB** 75 63 562	**ALFA ROMEO** 145, 146, 155, 156, 164, GTV, SPIDER **BMW** 3, 5 **FIAT** BRAVA, BRAVO, COUPE, MAREA **FORD** SCORPIO **LANCIA** DEDRA, DELTA, KAPPA **LAND ROVER** RANGE ROVER **OPEL** FRONTERA, OMEGA **ROVER** 800 **SAAB** 9000
Note: Number of ports : 2		

330122 - SENDER UNIT, COOLANT TEMPERATURE

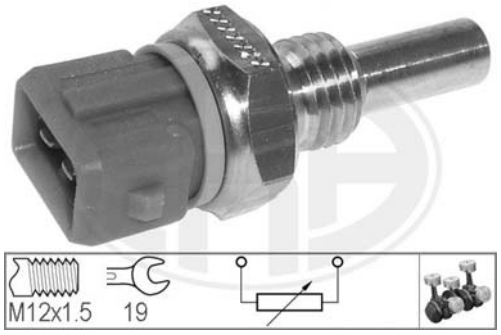

CITROENPEUGEOT
1920 K9, 96 131 470
FIAT
9613147080

CITROËN
AX, BERLINGO, EVASION, JUMPER, SAXO, XANTIA, XM, XSARA, ZX
FIAT
DUCATO, ULYSSE
LANCIA
ZETA
PEUGEOT
106, 306, 405, 406, 605, 806, BOXER, EXPERT, PARTNER

Note: Number of ports : 2

330124 - SENDER UNIT, COOLANT TEMPERATURE

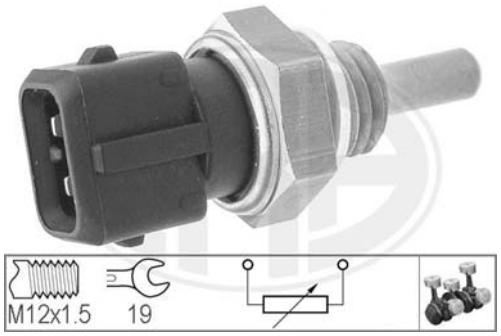

FIAT
46449499, 60576529, 60809565

ALFA ROMEO
145, 146, 33
FIAT
PALIO, PUNTO, SIENA

Note: Number of ports : 2

330125 - SENDER UNIT, COOLANT TEMPERATURE

FORD
6193368, 91AB 10884 AA
MAZDA
1 E04 18 760, 1 E04 18 760A

FORD
ESCORT, ESCORT CLASSIC, FIESTA, GALAXY, MONDEO, ORION, SCORPIO, TOURNEO CONNECT, TRANSIT, TRANSIT CONNECT
MAZDA
121

Note: Number of ports : 2

330126 - SENDER UNIT, COOLANT TEMPERATURE

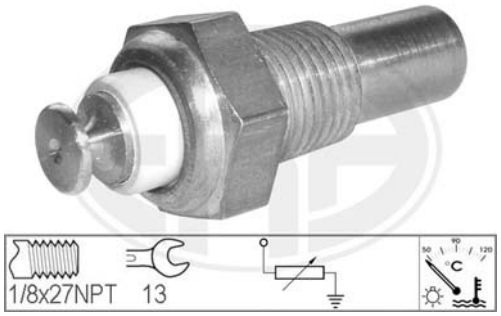

OPEL
13 42 569, 90 510 850, 92 029 764
SAAB
34 39 088, 47 72 216, 95 43 802

OPEL
ASTRA, ASTRA F CLASSIC, CALIBRA, COMBO, CORSA, OMEGA, TIGRA, VECTRA
SAAB
9-3, 9-5

Note:

330127 - SENDER UNIT, COOLANT TEMPERATURE

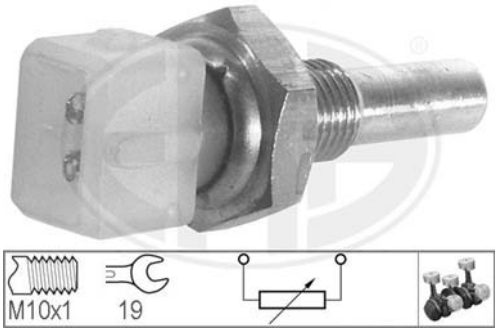

VW
026 906 161

AUDI
100, 80, 90, A6, CABRIOLET, COUPE
SEAT
CORDOBA, IBIZA, TOLEDO
VW
CADDY, GOLF, JETTA, PASSAT, SCIROCCO

Note:

330128 - SENDER UNIT, COOLANT TEMPERATURE

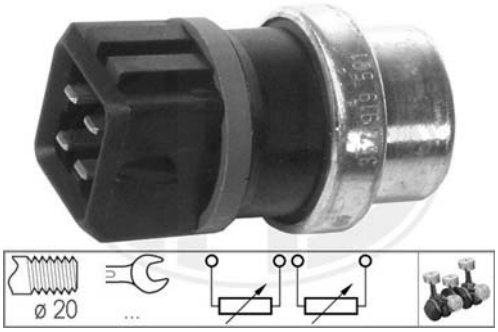

VW
357 919 501, 357 919 501 B

SEAT
CORDOBA, IBIZA, INCA, TOLEDO
SKODA
FELICIA
VW
CADDY, GOLF, LT 28-35, LT 40-55, PASSAT, POLO, TRANSPORTER, VENTO

Note: Number of ports : 4

330129 - SENDER UNIT, COOLANT TEMPERATURE

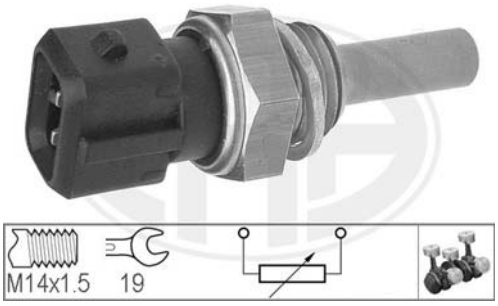

BMW
1 710 535, 12 62 1 747 281

BMW
3, 5, 7, 8

Note: Number of ports : 2

330130 - SENDER UNIT, COOLANT TEMPERATURE

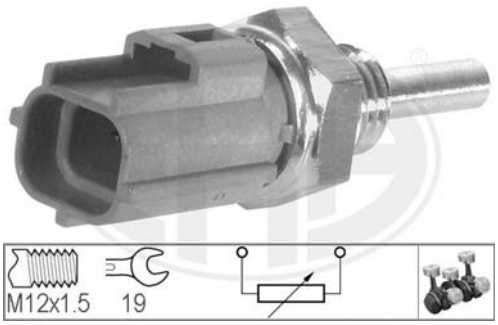

FORD
3405645, 3465427, 3601374, B3C8 18840, B593 18840 A, F32Z 12A648 A, F42Z 10884 A
MAZDA
B 3C8 18 840, B 593 18 840 A, N 391 18 840, N F02 18 840, Y 702 18 840
SUZUKI
13650-51G10, 13650-57F00, 13650-61B00, 13650-78E00
TOYOTA
89422 20010, 89422 35010
VOLVO
30874172

FORD RANGER
HOLDEN APOLLO
LEXUS ES, GS, LS
MAZDA
121, 2, 3, 323 C, 323 F, 323 P, 323 S, 5, 6, 626, BT-50, E-SERIE, MPV, MX-3, MX-5, MX-6, PREMACY, RX 7, RX 8, XEDOS 6, XEDOS 9
MINI MINI
SUZUKI
GRAND VITARA, SAMURAI, SWIFT, VITARA, X-90
TOYOTA
4 RUNNER, AVENSIS, AVENSIS VERSO, CAMRY, CARINA, CELICA, COROLLA, HIACE, HILUX, LAND CRUISER, LAND CRUISER 100, LAND CRUISER 80, LAND CRUISER 90, LITEACE, MR 2, PASEO, PICNIC, PREVIA, PRIUS, RAV 4, STARLET, SUPRA, YARIS, YARIS VERSO
VOLVO
C30, C70, S40, S60, S80, V40, V50, V70, XC 90, XC70, XC70 CROSS COUNTRY
VW TARO

Note: Number of ports : 2

330131 - SENDER UNIT, COOLANT TEMPERATURE

FORD
6145142, 7171007, 7334637, 86VB 10884 AA, 95GB 10884 AA, 95VB 10884 BA
MAZDA
1 E03 18 760, 1 E07 18 760

FORD
SCORPIO, TRANSIT
MAZDA
121

Note:

330132 - SENDER UNIT, COOLANT TEMPERATURE

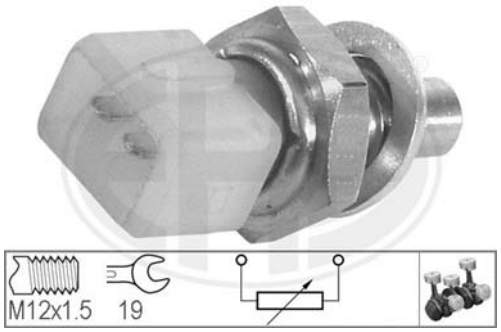

OPEL
09 109 810, 44 01 810
RENAULT
77 00 737 571, 77 00 869 343
VOLVO
3344169, 3345511

OPEL
MOVANO
RENAULT
19, 21, 25, CLIO, ESPACE, LAGUNA, MASTER, MEGANE, RAPID, SAFRANE, SUPER 5, TRAFIC, TWINGO
VOLVO
440, 460, 480

Note:

330133 - SENDER UNIT, COOLANT TEMPERATURE

BMW
13 62 1 459 197
CITROENPEUGEOT
0242 62
FERRARI
121720
FIAT
60534312, 60800522, 7647004
JAGUAR
EAC 5713
OPEL
13 38 452, 13 38 457, 90 410 793, 90 510 182
PORSCHE
928 606 126 00
SAAB
87 88 200
VOLVO
1346030-8, 3433477-1

ALFA ROMEO
155, 164, 75, GTV, SPIDER
LANCIA
KAPPA, THEMA
OPEL
ASTRA, OMEGA
PORSCHE
928
SAAB
9000
VOLVO
240, 440, 460, 480, 740, 760, 780, 940, 960

Note: Number of ports : 2

330134 - SENDER UNIT, COOLANT TEMPERATURE

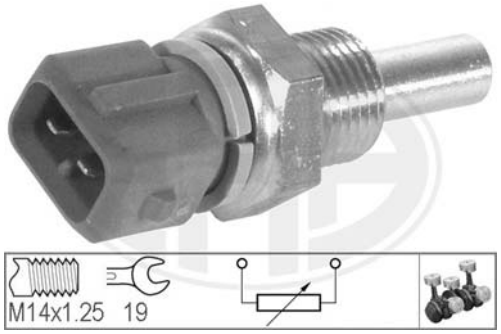

CITROENPEUGEOT
1338 47, 1338 78
FIAT
9618572580
NISSAN
25080-1F600

CITROËN
AX, BERLINGO, C15, EVASION, JUMPER, JUMPY, SAXO, XANTIA, XM, XSARA, ZX
FIAT
SCUDO, ULYSSE
LANCIA
ZETA
NISSAN
MICRA
PEUGEOT
106, 306, 406, 605, 806, BOXER, EXPERT, PARTNER
ROVER
100 (METRO)

Note: Number of ports : 2

330135 - SENDER UNIT, COOLANT TEMPERATURE

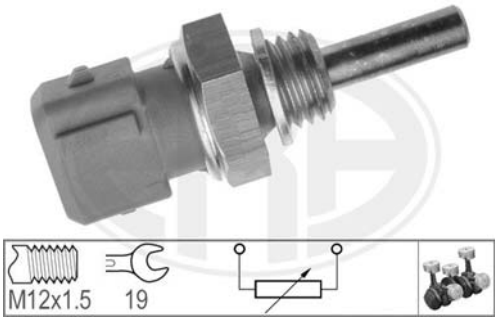

DAIHATSU
89422-87701
MAZDA
8 574-18-840
SUZUKI
13650-84101
TOYOTA
89422-12010, 89422-30020

DAIHATSU
CHARADE
MAZDA
121, 323, 323 C, 323 F, 323 S, 626, 929, MX-3, MX-5, RX 7
SUZUKI
SWIFT
TOYOTA
CAMRY, CELICA, COROLLA, HIACE, LAND CRUISER, SUPRA

Note: Number of ports : 2

330136 - SENDER UNIT, COOLANT TEMPERATURE

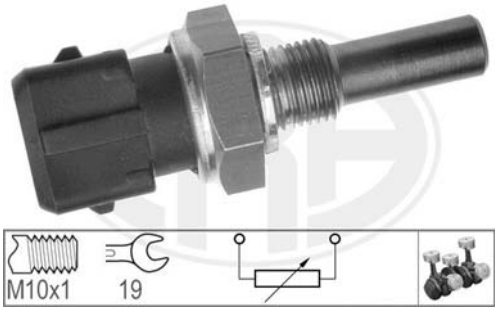

VW
026 906 161 2, 034 906 161

AUDI
100, 80, 90, A6, CABRIOLET, COUPE

Note: Number of ports : 2

330138 - SENDER UNIT, COOLANT TEMPERATURE

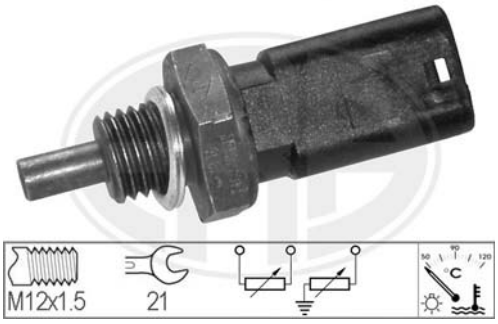

NISSAN
22630-00QAB
OPEL
44 08 333, 91 159 949
RENAULT
77 00 101 968, 77 00 113 867, 82 00 561 449, 82 00 702 976

DACIA
LOGAN, LOGAN MCV, SANDERO
NISSAN
KUBISTAR, PRIMASTAR
OPEL
MOVANO, VIVARO
RENAULT
AVANTIME, CLIO, ESPACE, GRAND SCENIC, KANGOO, LAGUNA, LOGAN, MASTER, MEGANE, MODUS, SCENIC, TRAFIC II, TWINGO, VEL SATIS

Note: Number of ports : 3

330139 - SENDER UNIT, COOLANT TEMPERATURE

MITSUBISHI
M809548
OPEL
44 01 661, 9109661
RENAULT
77 00 865 290
VOLVO
30809548

MITSUBISHI
CARISMA
OPEL
ARENA
RENAULT
CLIO, ESPACE, KANGOO, LAGUNA, MEGANE, SCENIC, TRAFIC
VOLVO
S40, V40

Note: Number of ports : 2

330141 - SENDER UNIT, COOLANT TEMPERATURE

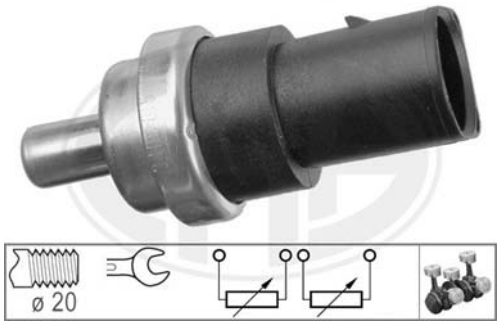

VW
078 919 501 C

AUDI
A2, A3, A4, A6, A8, ALLROAD, TT
FORD
GALAXY
SEAT
ALHAMBRA, AROSA, CORDOBA, IBIZA, INCA, LEON, TOLEDO
SKODA
OCTAVIA, SUPERB
VW
BORA, CADDY, FOX, GOLF, JETTA, LUPO, NEW BEETLE, PASSAT, POLO, SHARAN, SPACEFOX, TOUAREG, TRANSPORTER

Note: Number of ports : 4

330142 - SENDER UNIT, COOLANT TEMPERATURE

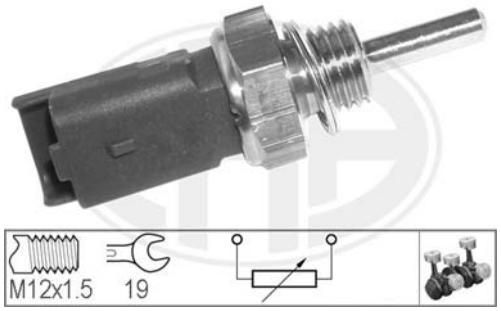

FIAT
46554621, 55188058, 55193203, 77363457
OPEL
13 38 040, 63 38 023, 63 38 038, 93 177 344, 93 184 155
SUZUKI
13650 79J50 000, 13650 84E50 000, 13650 84E51 000

ALFA ROMEO
147, 159, GT, SPIDER
FIAT
BRAVO, CROMA, DOBLO, IDEA, PALIO, PANDA, PUNTO, GRANDE PUNTO, SEDICI, SEICENTO, SIENA, STILO, STRADA
LANCIA
MUSA, THESIS, YPSILON
OPEL
AGILA, ASTRA, COMBO, CORSA, MERIVA, SIGNUM, TIGRA, VECTRA, ZAFIRA
SUZUKI
IGNIS, SWIFT, SX4, WAGON R+

Note: Number of ports : 2

330143 - SENDER UNIT, COOLANT TEMPERATURE

FIAT
46474712, 46474713, 60814402

ALFA ROMEO
145, 146, 156, 166, GTV, SPIDER
FIAT
BARCHETTA, BRAVA, BRAVO, COUPE, MAREA, MULTIPLA, PALIO, PUNTO, SIENA
LANCIA
DEDRA, DELTA, KAPPA, LYBRA, Y

Note: Number of ports : 3

330144 - SENDER UNIT, COOLANT TEMPERATURE

FORD
1L24 12A648 BA, 4323633, 4337456, 5042970, 7158126, F5AF 12A648 AA, F5AF 12A648 AB
LAND ROVER
4323633, 4337456
MAZDA
1 E00 18 510, C201 18140 Z01, Z ZM1-18-707
VOLVO
30711661, 30711661-A

FORD
C-MAX, COUGAR, ESCORT, ESCORT CLASSIC, FIESTA, FOCUS, FOCUS C-MAX, FUSION, GALAXY, KA, MONDEO, ORION, PUMA, SCORPIO, TRANSIT, TRANSIT TOURNEO
FORD USA
EXPLORER, WINDSTAR
MAZDA
121, 2
VOLVO
C30, S40, V50

Note: Number of ports : 2

	Suitable to:	Used on:
330145 - SENDER UNIT, COOLANT TEMPERATURE 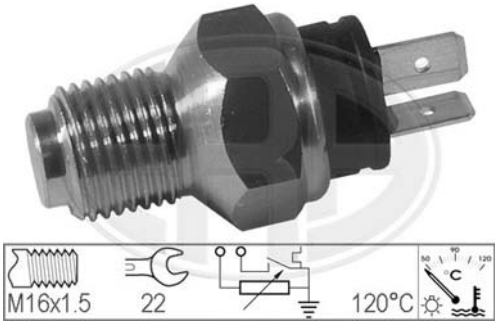 	**ALFA ROMEO** 60806378, 60809521, 60811250 **FIAT** 7553258, 7762300	**ALFA ROMEO** 145, 146, 155, 156, GTV, SPIDER **FIAT** CROMA **LANCIA** DEDRA, DELTA, LYBRA, PRISMA, THEMA, Y, Y10
Note: Number of ports : 2		
330146 - SENDER UNIT, COOLANT TEMPERATURE 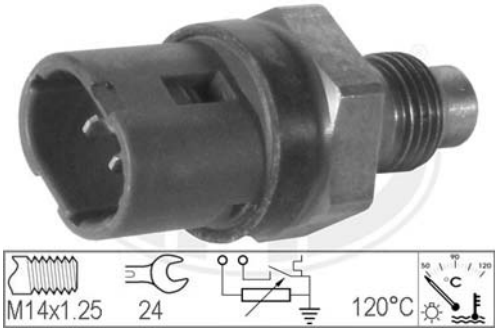 	**RENAULT** 77 00 810 879	**RENAULT** 19, CLIO, MEGANE, TRAFIC
Note: Number of ports : 2		
330147 - SENDER UNIT, COOLANT TEMPERATURE 	**CITROENPEUGEOT** 0242 68, 96 018 422 **FIAT** 9601842280 **ROVER** PEJ 10007	**CITROËN** AX, BERLINGO, EVASION, JUMPER, XANTIA, XM, ZX **FIAT** DUCATO, ULYSSE **LANCIA** ZETA **PEUGEOT** 106, 306, 309, 405, 406, 605, 806 **ROVER** 100 (METRO)
Note: Number of ports : 2		
330148 - SENDER UNIT, COOLANT TEMPERATURE 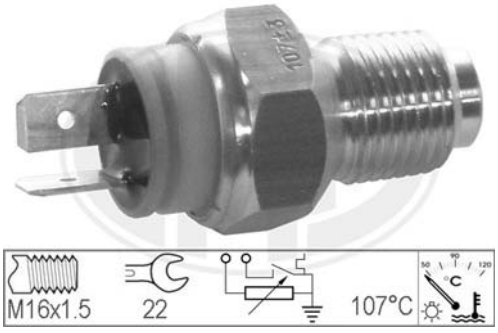 	**CITROENPEUGEOT** 1338 93, 1338 F7 **FIAT** 4837950, 504127558	**CITROËN** JUMPER **FIAT** DUCATO **IVECO** DAILY I, DAILY II **PEUGEOT** BOXER
Note: Number of ports : 2		

	Suitable to:	Used on:
330149 - SENDER UNIT, COOLANT TEMPERATURE 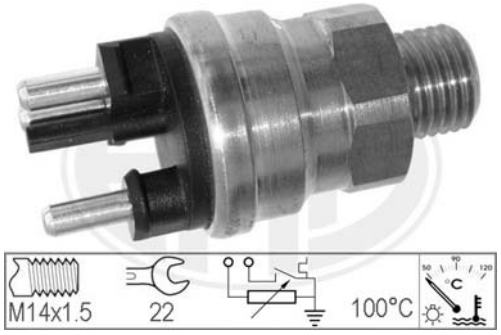	**MERCEDES-BENZ** 006 545 91 24	**MERCEDES-BENZ** 190, COUPE, G-CLASS, KOMBI, T1 **PUCH** G-MODELL
Note: Number of ports : 3		
330150 - SENDER UNIT, COOLANT TEMPERATURE	**VW** 053 919 501 A	**AUDI** 100, 80, 90, A6, CABRIOLET, COUPE
Note: Number of ports : 3		
330151 - SENDER UNIT, COOLANT TEMPERATURE 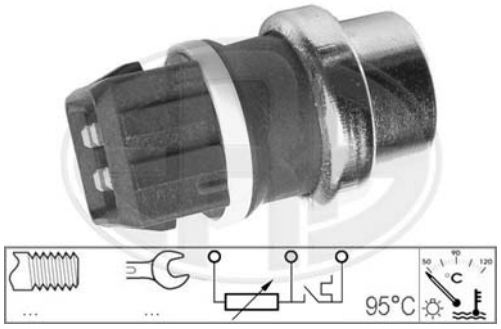	**FORD** 1669990, 95VW 8B607 LA **VW** 701 919 369 B, 701 919 369 C	**AUDI** 80 **FORD** GALAXY **VW** LT 28-35, LT 40-55, PASSAT, TRANSPORTER, VENTO
Note: Number of ports : 4		
330152 - SENDER UNIT, COOLANT TEMPERATURE 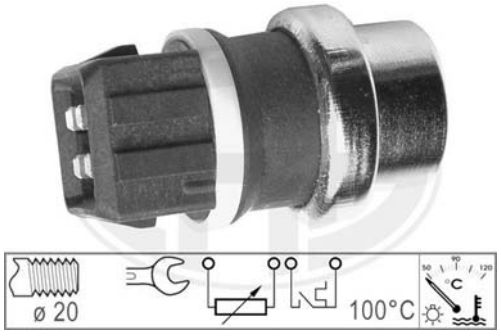	**FORD** 1097757, 95VW 8B607 MA **VW** 701 919 369 D	**FORD** GALAXY **VW** CORRADO, GOLF, PASSAT, SHARAN, TRANSPORTER
Note: Number of ports : 4		

ERA S.p.A. Moncalieri (TO) Italy - tel: +39 011 6891511 - fax: +39 011 6472862 - www.eranet.it

330153 - SENDER UNIT, COOLANT TEMPERATURE

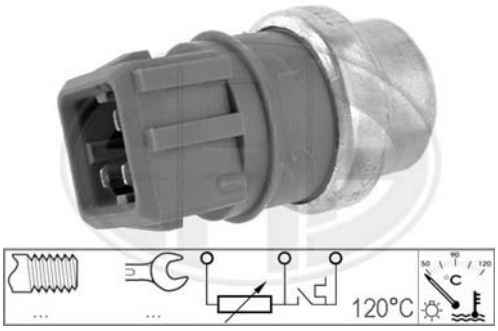

MITSUBISHI
M810074
OPEL
44 02 298, 9110298
RENAULT
77 00 829 427
VOLVO
30810074-2

MITSUBISHI
CARISMA
OPEL
ARENA
RENAULT
CLIO, ESPACE, KANGOO, LAGUNA, MEGANE, SCENIC, TRAFIC
VOLVO
S40, V40

Note: Number of ports : 3

330154 - SENDER UNIT, COOLANT TEMPERATURE

CITROENPEUGEOT
0242 83

CITROËN
BERLINGO, SAXO, XSARA, XSARA PICASSO, ZX
PEUGEOT
206, 306, PARTNER

Note: Number of ports : 2

330155 - SENDER UNIT, COOLANT TEMPERATURE

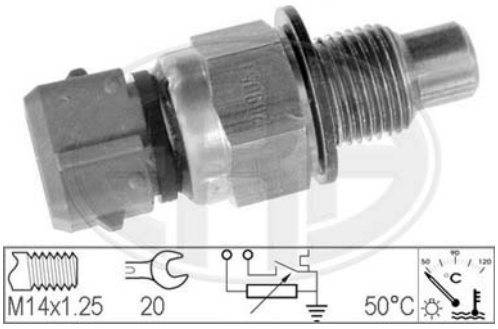

CITROENPEUGEOT
1338 85
FIAT
9625202480

CITROËN
BERLINGO, JUMPY, XSARA
FIAT
SCUDO
PEUGEOT
206, 306, EXPERT, PARTNER

Note: Number of ports : 2

330156 - SENDER UNIT, COOLANT TEMPERATURE

FIAT
4141538, 4163888, 4169122, 4185217, 4189508, 4334613, 4414779, 7512908, 7588847, 7588920
VW
SE 141947.000A
ZASTAVA
1450292

FIAT
124, 127, 128, 242-SERIE, ARGENTA, FIORINO, FIORINO Pick up, PALIO, PANDA, PUNTO, RITMO, SIENA, STRADA, UNO
LANCIA
BETA, PRISMA, Y, Y10
SEAT
MARBELLA

Note:

330157 - SENDER UNIT, COOLANT TEMPERATURE

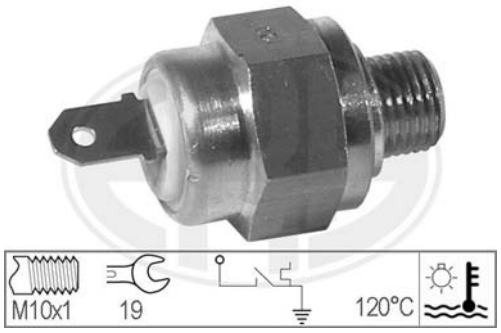

VW
035 919 521 A, 171 919 521 F

AUDI
100, 80, 90

Note:

330158 - SENDER UNIT, COOLANT TEMPERATURE

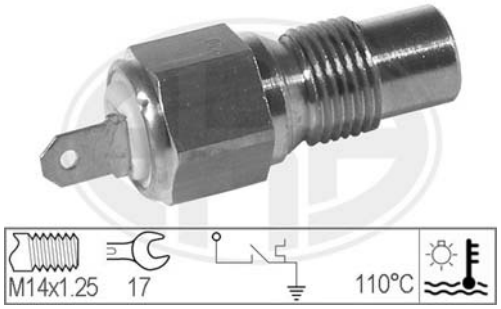

CITROENPEUGEOT
0242 26, 0242 49, 91 519 272
FORD
6198827, 6590141

CITROËN
AX, BX, C15
FORD
SCORPIO
PEUGEOT
205, 309, 405, 505

Note:

330159 - SENDER UNIT, COOLANT TEMPERATURE

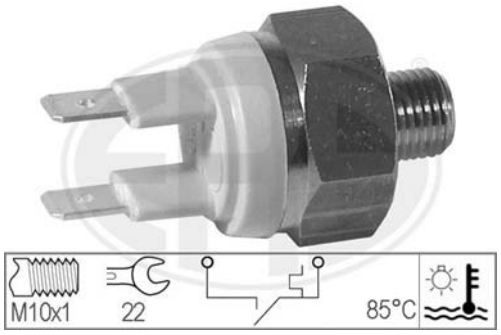

VW
034 919 369 A

AUDI
100, 80, 90, A6, COUPE
VW
PASSAT

Note:

330160 - SENDER UNIT, COOLANT TEMPERATURE

CITROENPEUGEOT
0242 78, 96 008 159
HYUNDAI
94650-29100, 94650-29101

CITROËN
XM
HYUNDAI
LANTRA
PEUGEOT
106

Note: Number of ports : 1

	Suitable to:	Used on:
330161 - SENDER UNIT, COOLANT TEMPERATURE 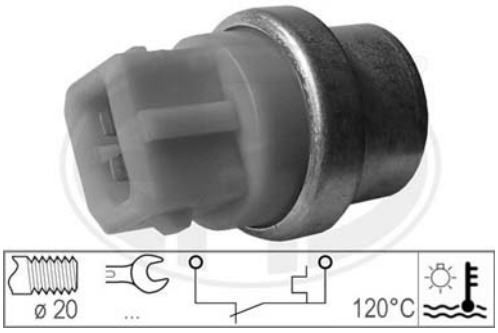	**VW** 191 919 369 A	**AUDI** A3, TT **SEAT** AROSA, CORDOBA, IBIZA, INCA, LEON, TOLEDO **SKODA** OCTAVIA **VW** BORA, CADDY, CORRADO, GOLF, JETTA, LT 28-35, LT 28-46, LUPO, NEW BEETLE, PASSAT, POLO, POLO PLAYA, VENTO
Note: Number of ports : 2		
330162 - SENDER UNIT, COOLANT TEMPERATURE 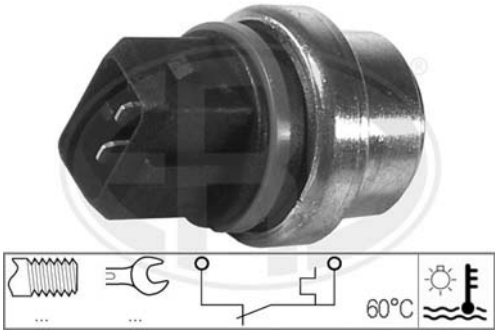	**FORD** 7280558, 95VW 8B607 HA **VW** 251 919 369 B	**FIAT** TIPO **FORD** GALAXY **SEAT** ALHAMBRA, CORDOBA, IBIZA, INCA, TOLEDO **VW** CADDY, GOLF, JETTA, PASSAT, POLO, POLO PLAYA, SCIROCCO, SHARAN, TRANSPORTER
Note: Number of ports : 2		
330163 - SENDER UNIT, COOLANT TEMPERATURE 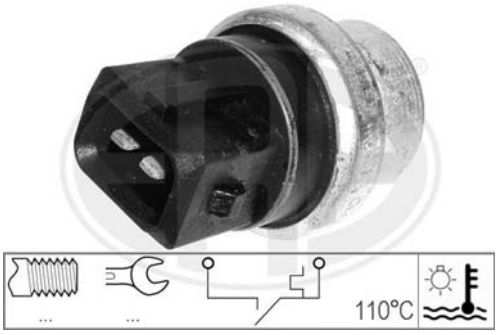	**FORD** 7355021, 95VW 8B607 EB **VW** 357 919 369 F	**AUDI** A6, ALLROAD **FORD** GALAXY **SEAT** ALHAMBRA, CORDOBA, IBIZA, TOLEDO **VW** CORRADO, GOLF, NEW BEETLE, PASSAT, POLO, SHARAN, VENTO
Note: Number of ports : 2		
330284 - SENDER UNIT, COOLANT TEMPERATURE 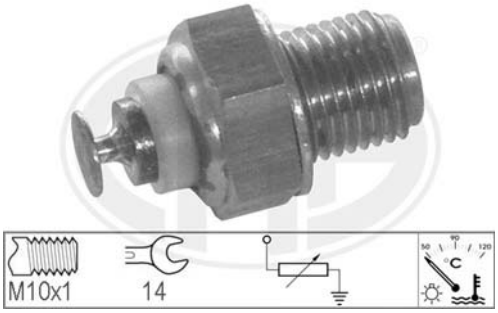	**VOLVO** 1257216, 3517501-7 **VW** 027 919 501, 049 919 501, 175 919 501	**AUDI** 100, 200, 80, 90, COUPE **SEAT** CORDOBA, IBIZA, TERRA, TOLEDO **VOLVO** 240, 740, 760, 940, 960 **VW** CORRADO, GOLF, JETTA, LT 28-35, LT 40-55, PASSAT, POLO, SANTANA, SCIROCCO
Note:		

330285 - SENDER UNIT, COOLANT TEMPERATURE

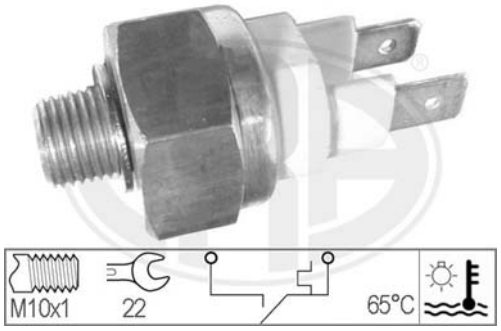

VW
035 919 369 C

AUDI
100, 80, 90
SEAT
TOLEDO
VW
GOLF, JETTA, LT 28-35, LT 40-55, PASSAT

Note:

330286 - SENDER UNIT, COOLANT TEMPERATURE

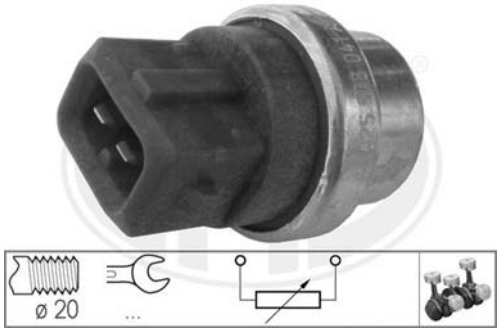

FORD
1669965, 95VW 12A648 BA
MERCEDES-BENZ
002 542 07 18
VW
025 906 041 A

AUDI
100, 80, A4, A6, CABRIOLET, COUPE
FORD
GALAXY
MERCEDES-BENZ
V-CLASS
SEAT
CORDOBA, IBIZA, INCA, TOLEDO
VW
CADDY, CORRADO, GOLF, JETTA, LT 28-35, LT 40-55, PASSAT, POLO, POLO PLAYA, SCIROCCO, SHARAN, TRANSPORTER, VENTO

Note: Number of ports : 2

330287 - SENDER UNIT, COOLANT TEMPERATURE

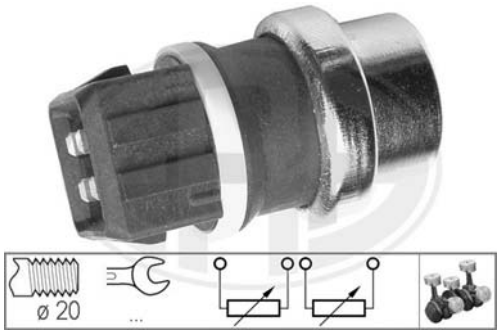

FORD
1331294, 1669948, 95VW 10884 AA, 95VW 10884 AB
VW
357 919 501 A, 6U0 919 501 B

FORD
GALAXY
SEAT
ALHAMBRA, AROSA, CORDOBA, IBIZA, INCA, TOLEDO
SKODA
FELICIA
VW
CADDY, CORRADO, GOLF, LUPO, PASSAT, POLO, POLO PLAYA, SHARAN, TRANSPORTER, VENTO

Note: Number of ports : 4

330288 - SENDER UNIT, COOLANT TEMPERATURE

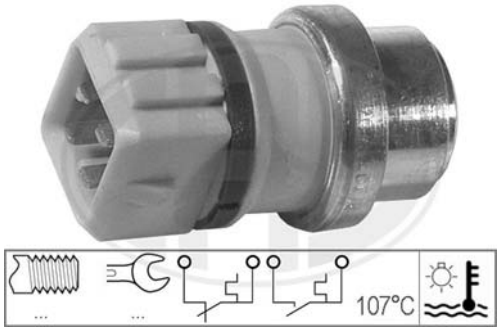

FORD
7210731, 95VW 8B607 DA
VW
701 919 369 E

FORD
GALAXY
SEAT
ALHAMBRA, TOLEDO
VW
LT 28-35, LT 28-46, SHARAN, TRANSPORTER

Note:

330289 - SENDER UNIT, COOLANT TEMPERATURE

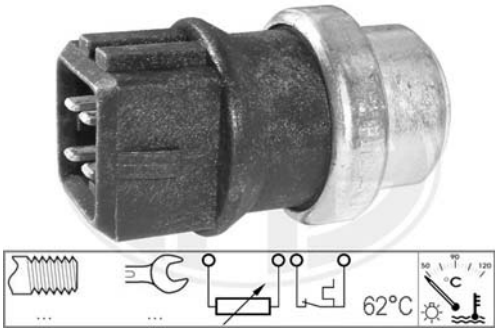

VW
701 919 369

SEAT
TOLEDO
VW
PASSAT

Note: Number of ports : 4

330290 - SENDER UNIT, COOLANT TEMPERATURE

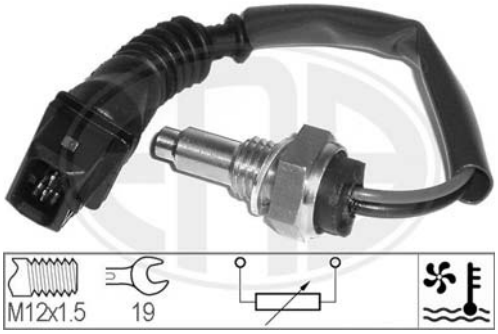

ALFA ROMEO
60812439
FIAT
7663320

ALFA ROMEO
145, 146
FIAT
CROMA, DUCATO, TEMPRA, TIPO
LANCIA
DEDRA, DELTA

Note: Number of ports : 2

330307 - SENDER UNIT, COOLANT TEMPERATURE

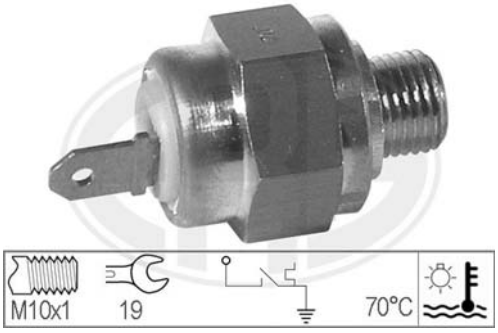

VW
191 919 521, 191 919 521 A

AUDI
80
VW
CADDY, GOLF, JETTA, PASSAT, SCIROCCO

Note:

330308 - SENDER UNIT, COOLANT TEMPERATURE

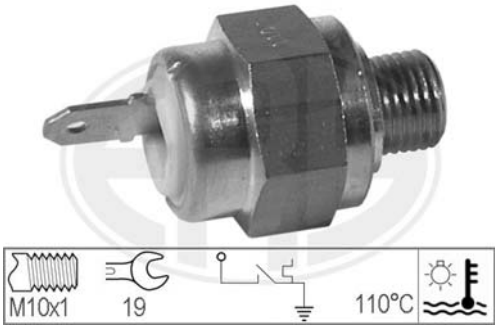

VW
053 919 521, 191 919 521 B

AUDI
80, COUPE
SEAT
TOLEDO
VW
CADDY, GOLF, JETTA, SCIROCCO

Note:

330309 - SENDER UNIT, COOLANT TEMPERATURE

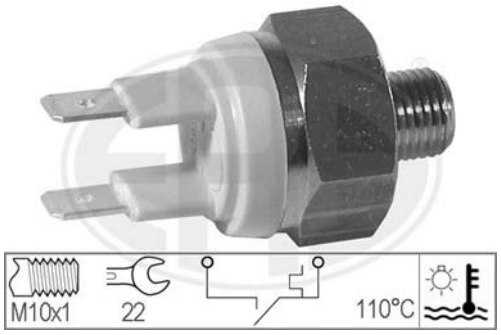

VW
035 919 369 S, 053 919 369 A, 054 919 369 B

AUDI
100, 200, 80, 90, A6, CABRIOLET, COUPE

Note:

330311 - SENDER UNIT, COOLANT TEMPERATURE

OPEL
45 00 733, 90 161 033
RENAULT
77 00 819 641

OPEL
MOVANO
RENAULT
MASTER, SAFRANE

Note:

330312 - SENDER UNIT, COOLANT TEMPERATURE

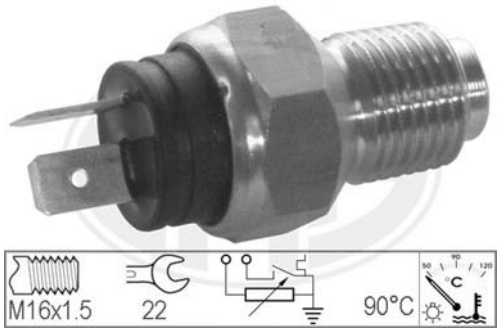

VOLVO
3457808-8

VOLVO
440, 460

Note:

330313 - SENDER UNIT, COOLANT TEMPERATURE

RENAULT
77 00 805 271, 77 00 810 880

RENAULT
19, 21, CLIO, LAGUNA

Note:

330314 - SENDER UNIT, COOLANT TEMPERATURE

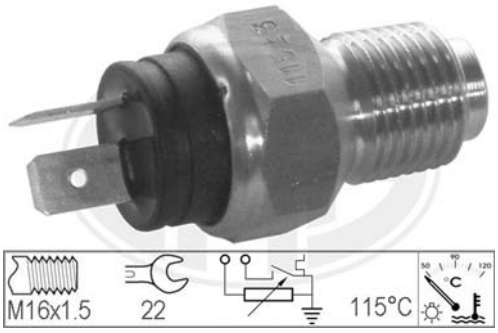

FIAT
4824207, 504128963, 5969930, 7762302

FIAT
CROMA, DUCATO, PUNTO, TALENTO
LANCIA
DEDRA, DELTA, PRISMA, THEMA, Y10

Note:

330315 - SENDER UNIT, COOLANT TEMPERATURE

VOLVO
3455171-3, 3467590-0

VOLVO
440, 460, 480

Note:

330333 - SENDER UNIT, COOLANT TEMPERATURE

MERCEDES-BENZ
008 542 45 17

MERCEDES-BENZ
C-CLASS, CABRIOLET, COUPE, E-CLASS, G-CLASS, KOMBI, S-CLASS, SL
PUCH
G-MODELL

Note:

330334 - SENDER UNIT, COOLANT TEMPERATURE

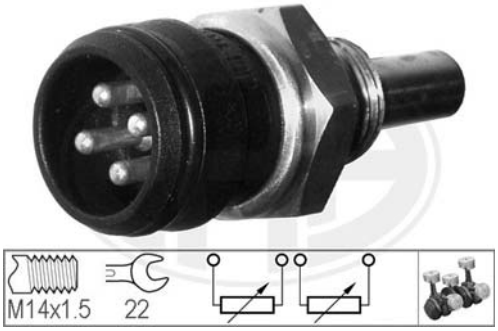

MERCEDES-BENZ
008 542 32 17

MERCEDES-BENZ
190, C-CLASS, CABRIOLET, COUPE, E-CLASS, G-CLASS, KOMBI, S-CLASS, SL
PUCH
G-MODELL

Note: Number of ports : 4

330466 - SENDER UNIT, COOLANT TEMPERATURE

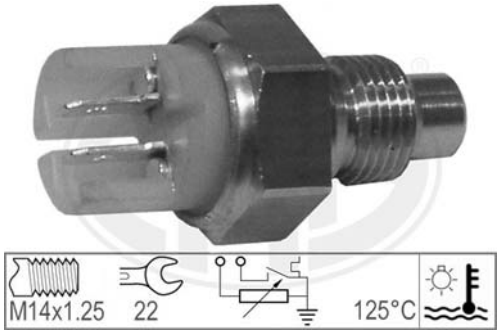

RENAULT
77 00 755 595, 77 00 758 464, 77 00 786 467

RENAULT
19, 21, 25, CLIO, ESPACE, MASTER, SUPER 5, TRAFIC

Note: Number of ports : 2

330477 - SENDER UNIT, COOLANT TEMPERATURE

VOLVO
30853464

VOLVO
S40, V40

Note: Number of ports : 3

330482 - SENDER UNIT, COOLANT TEMPERATURE

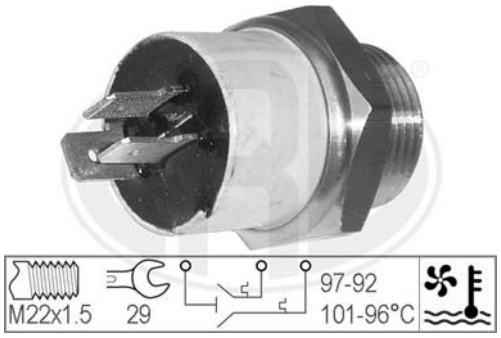

CITROENPEUGEOT
96 015 496 80

PEUGEOT
205 D (1987..1990)

Note: Number of ports : 3

330483 - SENDER UNIT, COOLANT TEMPERATURE

FIAT
4477080, 4477081

FIAT
PANDA, REGATA

Note: Number of ports : 2

330484 - SENDER UNIT, COOLANT TEMPERATURE

FIAT
4478951, 5951985, 5951987

FIAT
UNO
SEAT
FURA

Note: Number of ports : 2

330485 - SENDER UNIT, COOLANT TEMPERATURE

VW
701 959 481 A

VW
TRANSPORTER

Note: Number of ports : 3

330495 - SENDER UNIT, COOLANT TEMPERATURE

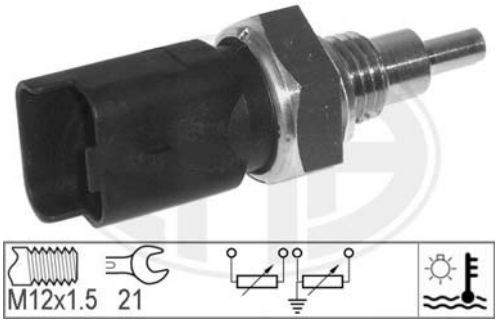

ALFA ROMEO
60816476
FIAT
46753479, 71718201

ALFA ROMEO
147, 156, 166, GT, GTV, SPIDER
FIAT
BARCHETTA, BRAVA, BRAVO, LINEA, MAREA, MULTIPLA, PALIO, SIENA, STILO, STRADA
LANCIA
LYBRA, THESIS, Y

Note: Number of ports : 4

330496 - SENDER UNIT, COOLANT TEMPERATURE

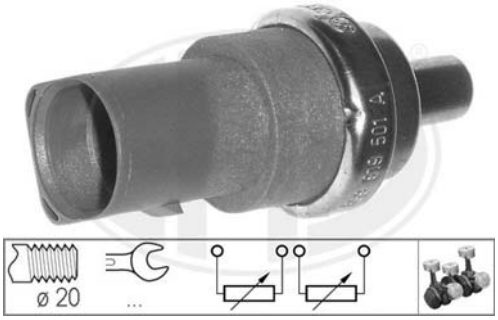

FORD
1100619, 1124770, XM21 8A570 BA
VW
059 919 501 A

AUDI
A2, A3, A4, A6, A8, TT
FORD
GALAXY
SEAT
ALHAMBRA, AROSA, CORDOBA, IBIZA, LEON, TOLEDO
SKODA
OCTAVIA, SUPERB
VW
BORA, GOLF, LUPO, NEW BEETLE, PASSAT, POLO, SHARAN, TRANSPORTER

Note: Number of ports : 4

330497 - SENDER UNIT, COOLANT TEMPERATURE

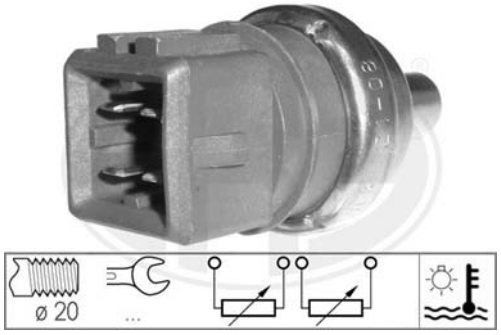

VW
059 919 501, 078 919 501 B

AUDI
A3, A4, A6, A8, CABRIOLET, TT
SEAT
ALHAMBRA, AROSA, CORDOBA, IBIZA
SKODA
OCTAVIA
VW
BORA, GOLF, LUPO, MULTIVAN, NEW BEETLE, PASSAT, POLO, SHARAN, TRANSPORTER

Note: Number of ports : 4

330502 - SENDER UNIT, COOLANT TEMPERATURE

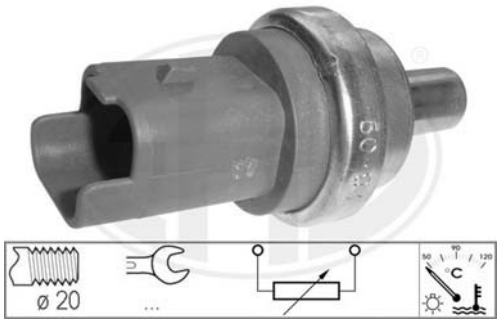

CITROENPEUGEOT
1338 C1, 1338 E2, 96 325 624 80, 96 554 141 80
FIAT
9632562080
FORD
1204700, 1231943, 1342631, 2S6Q 12A648 AA, 2S6Q 12A648 AB
TOYOTA
SU001 00639

CITROËN
BERLINGO, C-CROSSER, C1, C2, C3, C4, C4 Grand Picasso, C4 Picasso, C5, C6, C8, JUMPY, NEMO, XSARA, XSARA PICASSO
FIAT
SCUDO, ULYSSE
FORD
C-MAX, FIESTA, FOCUS, FOCUS C-MAX, FUSION, GALAXY, KUGA, MONDEO, S-MAX
LANCIA
PHEDRA
MAZDA
2, 3
PEUGEOT
1007, 107, 206, 207, 207 CC, 207 SW, 307, 308, 308 SW, 4007, 406, 407, 607, 807, BIPPER, EXPERT, EXPERT Tepee, PARTNER, PARTNER Tepee
SUZUKI
GRAND VITARA, LIANA
TOYOTA
AYGO
VOLVO
C30, C70, S40, V50, V70

Note: Number of ports : 2

330509 - SENDER UNIT, COOLANT TEMPERATURE

OPEL
12 992 783, 13 42 570, 13 42 571, 90 530 444

ALFA ROMEO
159
FIAT
CROMA
OPEL
ASTRA, CORSA, MERIVA, OMEGA, SIGNUM, TIGRA, VECTRA, ZAFIRA

Note: Number of ports : 2

330527 - SENDER UNIT, COOLANT TEMPERATURE

CITROENPEUGEOT
0242 30, 0242 43, 95 495 591, 95 579 683
FORD
6590140, 90GB 10B843 AA

CITROËN
BX, C15
FORD
SCORPIO
PEUGEOT
205, 309, 505

Note:

330528 - SENDER UNIT, COOLANT TEMPERATURE

OPEL
13 42 855, 90 573 077

OPEL
OMEGA, VECTRA

Note: Number of ports : 2

330530 - SENDER UNIT, COOLANT TEMPERATURE

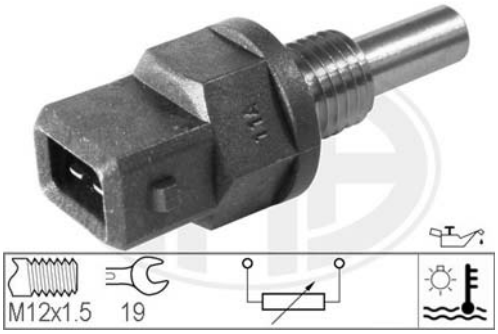

JAGUAR
LHE 1600AA
LAND ROVER
MEK100060L
ROVER
GTR206

LAND ROVER
FREELANDER
MG
MG TF, MG ZR, MGF
ROVER
200, 25, 400, 45, 800, CABRIOLET, COUPE, MINI

Note: Number of ports : 2

330531 - SENDER UNIT, COOLANT TEMPERATURE

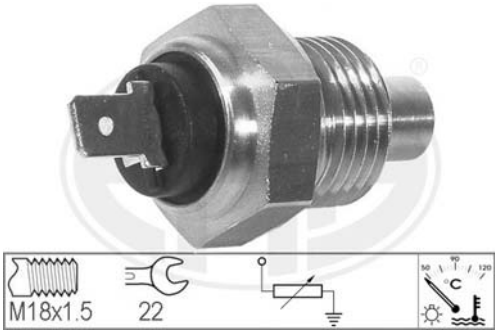

CITROENPEUGEOT
0242 14, 0242 40, 95 548 678, 95 581 212
FIAT
5494830
RENAULT
60 00 001 355, 77 00 503 200, 77 01 349 086

FIAT
DUCATO
PEUGEOT
504, 505
RENAULT
14, 5
TALBOT
SAMBA

Note: Number of ports : 1

330536 - SENDER UNIT, COOLANT TEMPERATURE

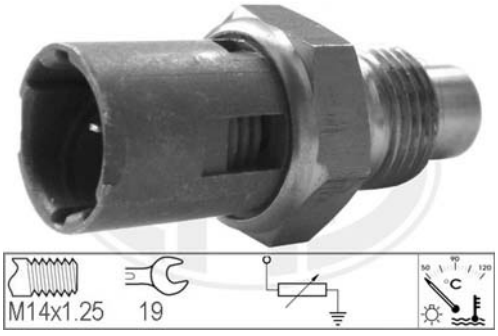

CHRYSLER
T0771821
RENAULT
77 00 771 821, 77 00 809 909

RENAULT
21, 25, ESPACE, SAFRANE

Note:

330546 - SENDER UNIT, COOLANT TEMPERATURE

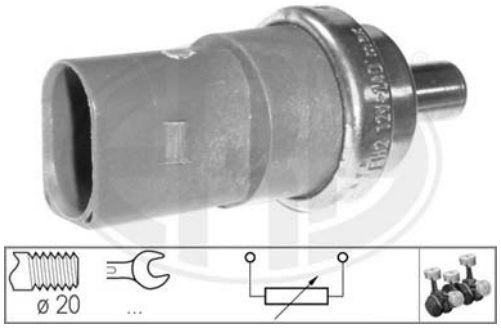

FORD
1100736, 1459209, 6M21 10884 AA, XM21 10884 BA
HYUNDAI
V10-99-0001
MERCEDES-BENZ
013 542 78 17
MITSUBISHI
MN980152, MN980264
PORSCHE
955 106 125 00, 955 106 125 01, 997 606 410 00
VW
06A 919 501, 06A 919 501 A

AUDI
A2, A3, A4, A5, A6, A6 Allroad, A8, Q7, R8, TT
FORD
GALAXY
MERCEDES-BENZ
V-CLASS
MITSUBISHI
GRANDIS, OUTLANDER
PORSCHE
BOXSTER, CAYENNE, CAYMAN
SEAT
ALHAMBRA, ALTEA, ALTEA XL, CORDOBA, IBIZA, LEON, TOLEDO
SKODA
FABIA, OCTAVIA, ROOMSTER, ROOMSTER Praktik, SUPERB
VW
BORA, CADDY, CRAFTER 30-35, CRAFTER 30-50, EOS, FOX, GOLF, JETTA, MULTIVAN, NEW BEETLE, PASSAT, PASSAT CC, PHAETON, POLO, SCIROCCO, SHARAN, TIGUAN, TOUAREG, TOURAN, TRANSPORTER

Note: Number of ports : 2

330550 - SENDER UNIT, COOLANT TEMPERATURE

FORD
6810428, F2AF 12A648 AA, F6DZ 19E702 A

FORD
ESCORT, FIESTA, GALAXY, MONDEO, ORION, SCORPIO, SIERRA, TRANSIT

Note: Number of ports : 2

330551 - SENDER UNIT, COOLANT TEMPERATURE

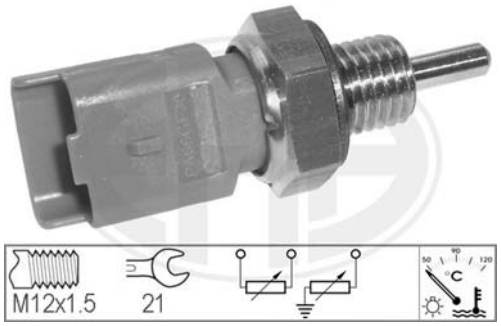

CITROENPEUGEOT
1338 97, 1338 A6

CITROËN
BERLINGO, C3, C8, JUMPER, JUMPY, SAXO, XANTIA, XSARA, XSARA PICASSO
FIAT
DUCATO, ULYSSE
PEUGEOT
1007, 106, 206, 207, 207 SW, 306, 307, 406, 807, BOXER, EXPERT, PARTNER
RENAULT
CLIO

Note: Number of ports : 3

330552 - SENDER UNIT, COOLANT TEMPERATURE

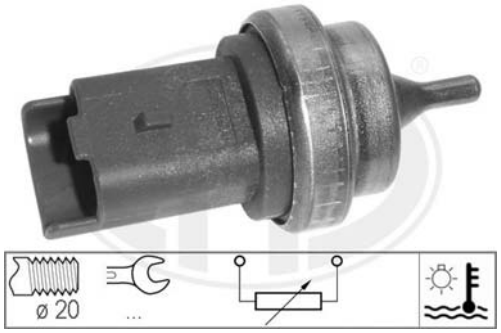

CITROENPEUGEOT
1338 F3, 1338 F8, 96 566 364
MINI
13 62 7 535 068

CITROËN
BERLINGO, C2, C3, C4, C4 Grand Picasso, C4 Picasso, XSARA PICASSO
MINI
MINI
PEUGEOT
1007, 206, 207, 207 CC, 207 SW, 307, 308, 308 SW, PARTNER, PARTNER Tepee

Note: Number of ports : 2

	Suitable to:	Used on:
330553 - SENDER UNIT, COOLANT TEMPERATURE 	**FIAT** 55190791	**FIAT** 500, BRAVO, DOBLO, IDEA, LINEA, PUNTO, GRANDE PUNTO, STILO **LANCIA** MUSA, YPSILON
Note: Number of ports : 2		
330554 - SENDER UNIT, COOLANT TEMPERATURE 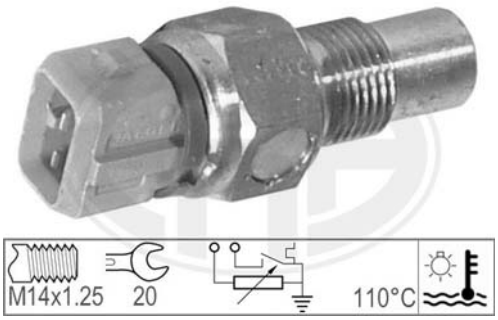 	**CITROENPEUGEOT** 1338 33, 96 089 138 **FIAT** 9608913880	**CITROËN** JUMPER, ZX **FIAT** DUCATO **PEUGEOT** 309, 405, BOXER
Note: Number of ports : 2		
330555 - SENDER UNIT, COOLANT TEMPERATURE 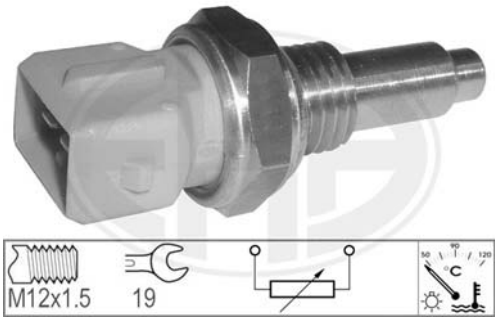 	**FIAT** 46414596	**FIAT** BRAVA, BRAVO, MAREA, PALIO, SIENA **LANCIA** DELTA
Note: Number of ports : 2		
330558 - SENDER UNIT, COOLANT TEMPERATURE 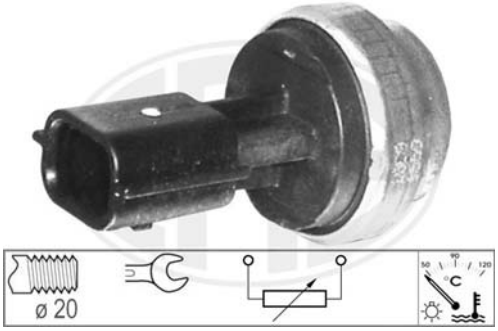 	**NISSAN** 22630-00Q0F, 22630-00Q0K **OPEL** 44 31 529, 44 33 120, 93 198 034 **RENAULT** 77 00 110 664, 82 00 650 777 **SUZUKI** 13650-67JG0	**DACIA** DUSTER **NISSAN** CUBE, INTERSTAR, JUKE, MICRA, NOTE, NV200, NV200 EVALIA, PATHFINDER, PRIMASTAR, QASHQAI, TIIDA, X-TRAIL **OPEL** MOVANO, VIVARO **RENAULT** CLIO, CLIO Grandtour, ESPACE, FLUENCE, GRAND SCENIC, KANGOO, KANGOO BE BOP, KOLEOS, LAGUNA, MASTER, MEGANE, MEGANE CC, MODUS, SCENIC, THALIA, TRAFIC II, TWINGO, VEL SATIS **SUZUKI** GRAND VITARA
Note: Number of ports : 2		

330559 - SENDER UNIT, COOLANT TEMPERATURE

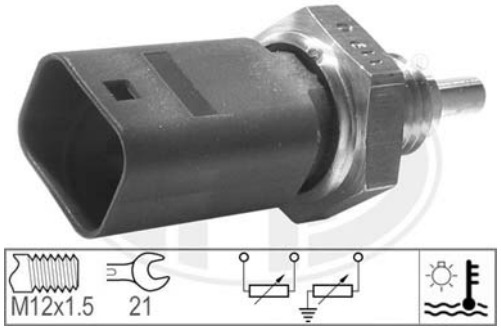

FIAT
46520915

FIAT
PALIO, PUNTO

Note: Number of ports : 3

330560 - SENDER UNIT, COOLANT TEMPERATURE

FIAT
46474599

FIAT
PALIO, SIENA, STRADA

Note: Number of ports : 3

330561 - SENDER UNIT, COOLANT TEMPERATURE

FIAT
46520384

FIAT
MAREA, MULTIPLA, SEICENTO

Note: Number of ports : 2

330562 - SENDER UNIT, COOLANT TEMPERATURE

HYUNDAI
39220-21310, 39220-21320, 39220-21330

HYUNDAI
H100, LANTRA, PONY, PONY/EXCEL, S COUPE, SONATA
MITSUBISHI
COLT, ECLIPSE, GALANT, LANCER, PAJERO, STARION

Note:

330574 - SENDER UNIT, COOLANT TEMPERATURE

GENERAL MOTORS
10 105 810
HYUNDAI
39230-26600
KIA
39230-26600

HYUNDAI
ACCENT, COUPE, ELANTRA, GETZ, H-1, MATRIX

Note: Cable Length [mm] : 200,Number of ports : 3

330576 - SENDER UNIT, COOLANT TEMPERATURE

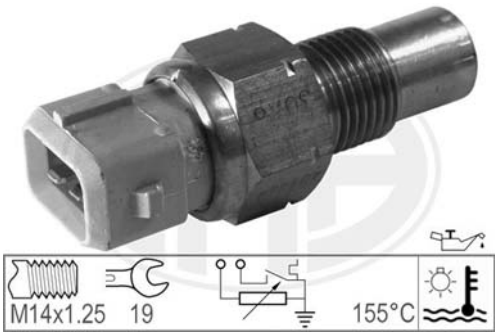

CITROENPEUGEOT
1131 78

CITROËN
EVASION, SAXO, XANTIA, ZX
FIAT
ULYSSE
PEUGEOT
106, 306, 406, 806

Note: Number of ports : 2

330581 - SENDER UNIT, COOLANT TEMPERATURE

HYUNDAI
39220-2X100
KIA
39220 2X100

KIA
CARENS, RIO

Note: Number of ports : 3

330582 - SENDER UNIT, COOLANT TEMPERATURE

HYUNDAI
39220-02500
KIA
39220-02500

CHEVROLET
AVEO, KALOS, MATIZ, SPARK
DAEWOO
KALOS, MATIZ
HYUNDAI
ATOS, ATOS PRIME

Note: Number of ports : 4

	Suitable to:	Used on:
330583 - SENDER UNIT, COOLANT TEMPERATURE 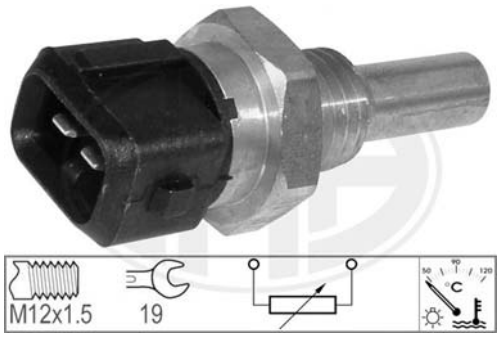	**KIA** K8574 18 840	**KIA** CLARUS, PRIDE, RETONA, SEPHIA, SHUMA, SPORTAGE
Note: Number of ports : 2		
330584 - SENDER UNIT, COOLANT TEMPERATURE	**FORD** 3857955, 5040463, 8L3A 6G004 AA, F65F 6G004 AB	**FORD** FOCUS, PUMA
Note: Number of ports : 2		
330585 - SENDER UNIT, COOLANT TEMPERATURE	**FORD** 1484876, 7M51 12A648 AA	**FORD** C-MAX, COUGAR, FIESTA, FOCUS, FOCUS C-MAX, FUSION, GALAXY, MAVERICK, MONDEO, RANGER, S-MAX **VOLVO** C30, S40, S80, V50, V70
Note: Number of ports : 2		
330586 - SENDER UNIT, COOLANT TEMPERATURE 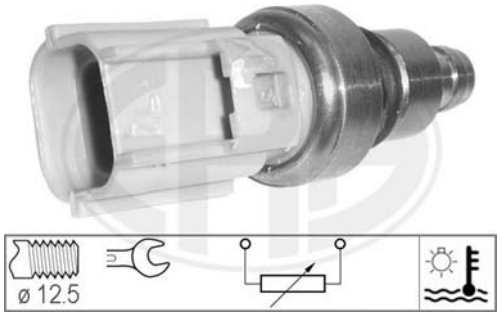	**FORD** 1089854, XS6E 12A648 BA, XS6F 12A648 BA	**FORD** FIESTA, FUSION, KA, STREET KA
Note: Number of ports : 2		

ERA S.p.A. Moncalieri (TO) Italy - tel: +39 011 6891511 - fax: +39 011 6472862 - www.eranet.it

330587 - SENDER UNIT, COOLANT TEMPERATURE

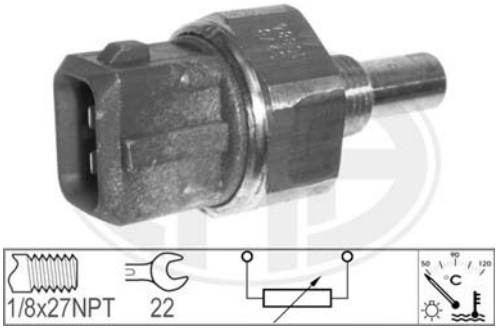

FORD
6635175, 92VB 10884 AA

FORD
TRANSIT

Note:

330588 - SENDER UNIT, COOLANT TEMPERATURE

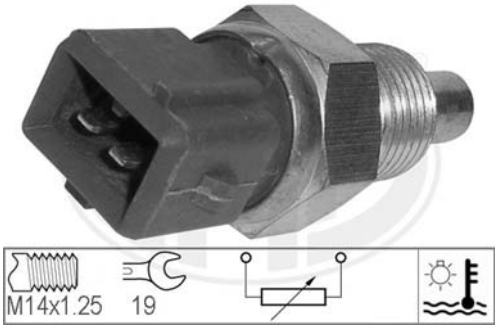

CITROENPEUGEOT
1338 10, 1338 55, 1338 56, 1338 84, 96 033 248
FIAT
9603324880, 9621000680

CITROËN
AX, BERLINGO, EVASION, JUMPER, JUMPY, SAXO, XANTIA, XM, XSARA, ZX
FIAT
DUCATO, SCUDO, ULYSSE
LANCIA
ZETA
PEUGEOT
106, 306, 405, 406, 605, 806, BOXER, EXPERT, PARTNER

Note: Number of ports : 2

330598 - SENDER UNIT, COOLANT TEMPERATURE

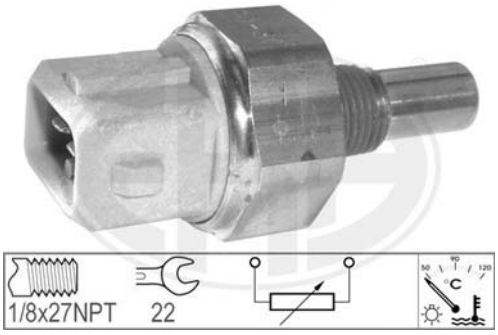

FORD
1104480, 98FU 10884 BA

FORD
FIESTA

Note: Number of ports : 2

330600 - SENDER UNIT, COOLANT TEMPERATURE

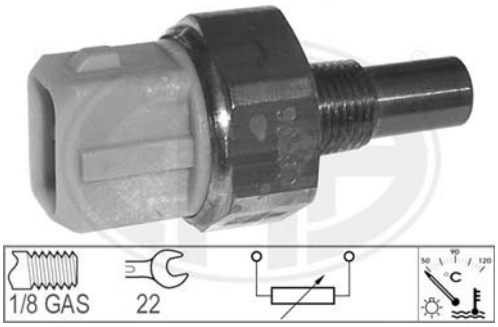

FORD
1013062, 95VB 10884 AB

FORD
TRANSIT

Note: Number of ports : 2

330605 - SENDER UNIT, COOLANT TEMPERATURE

FORD
3936774, F77F 10884 BB

FORD
COUGAR, MONDEO, TRANSIT

Note: Number of ports : 2

330606 - SENDER UNIT, COOLANT TEMPERATURE

FORD
3999215, F83F 10884 AA

FORD
FIESTA, MONDEO

Note: Number of ports : 2

330607 - SENDER UNIT, COOLANT TEMPERATURE

FORD
3F1T 10884 AA, 4517136

FORD
COUGAR, MONDEO

Note: Number of ports : 2

330608 - SENDER UNIT, COOLANT TEMPERATURE

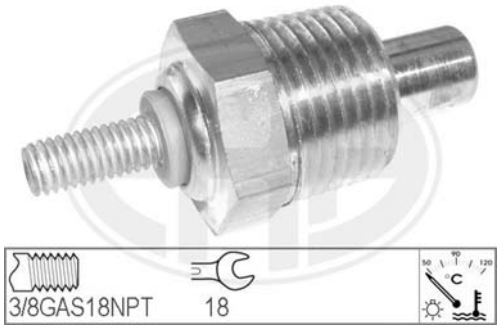

FORD
6765706, 93BB 10884 AA

FORD
MONDEO

Note:

330609 - SENDER UNIT, COOLANT TEMPERATURE

FORD
3901186, F77F 10884 AB

FORD
COUGAR, MONDEO

Note: Number of ports : 2

330612 - SENDER UNIT, COOLANT TEMPERATURE

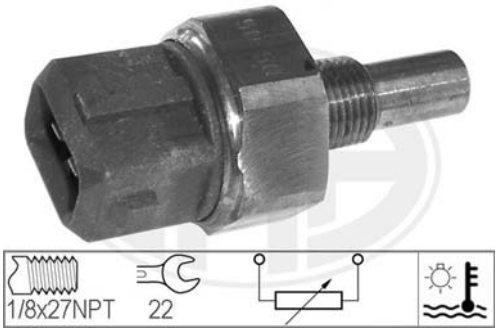

FORD
1008790, 91AB 10884 BB, 96FB 10884 AA

FORD
FIESTA, TRANSIT

Note: Number of ports : 2

330613 - SENDER UNIT, COOLANT TEMPERATURE

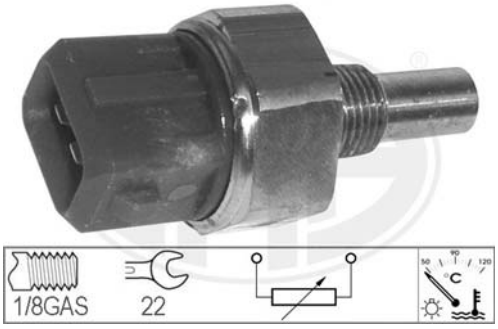

FORD
1057836, 97FB 10884 AA
MAZDA
1 E04 18 760

FORD
ESCORT, ESCORT CLASSIC, FIESTA, FOCUS, GALAXY, MONDEO, ORION, SCORPIO, TRANSIT, TRANSIT CONNECT, TRANSIT TOURNEO
MAZDA
121

Note: Number of ports : 2

330614 - SENDER UNIT, COOLANT TEMPERATURE

IVECO
4856030

IVECO
DAILY I

Note: Number of ports : 2

330619 - SENDER UNIT, COOLANT TEMPERATURE

CITROENPEUGEOT
1338 G4
DAIHATSU
89422-87101-000, 89422-87202-000
HYUNDAI
39220-35710
MITSUBISHI
MD177572, MD182467, MR985034
VOLVO
30874182

DAIHATSU
APPLAUSE, CHARADE, CUORE, FEROZA Hard Top, FEROZA Soft Top, MOVE
HYUNDAI
SONATA, XG
MITSUBISHI
CARISMA, COLT, ECLIPSE, GALANT, GRANDIS, L 200, L 300, L 400, LANCER, OUTLANDER, PAJERO, PAJERO CLASSIC, PAJERO PININ, PAJERO SPORT, SPACE GEAR, SPACE RUNNER, SPACE STAR, SPACE WAGON
PEUGEOT
4007
VOLVO
S40, V40

Note: Height [mm] : 17,Number of ports : 2

330624 - SENDER UNIT, COOLANT TEMPERATURE

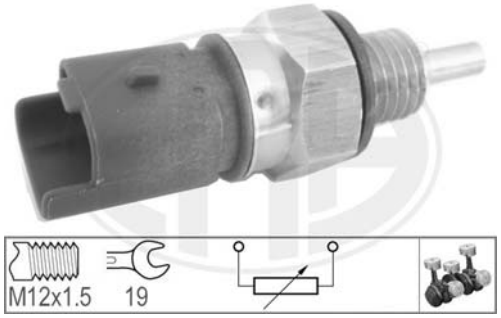

CITROENPEUGEOT
1338 A7, 96 367 771, 96 367 771 80
FIAT
9628454680, 9636777180
TOYOTA
89422 02020

CITROËN
BERLINGO, C2, C3, C4, C4 Picasso, C5, C6, C8, EVASION, JUMPY, NEMO, XSARA, XSARA PICASSO
FIAT
FIORINO, QUBO, SCUDO, ULYSSE
LANCIA
PHEDRA, ZETA
PEUGEOT
1007, 206, 307, 406, 407, 607, 806, 807, BIPPER, EXPERT, PARTNER
RENAULT
AVANTIME, LAGUNA
TOYOTA
COROLLA

Note: Number of ports : 2

330626 - SENDER UNIT, COOLANT TEMPERATURE

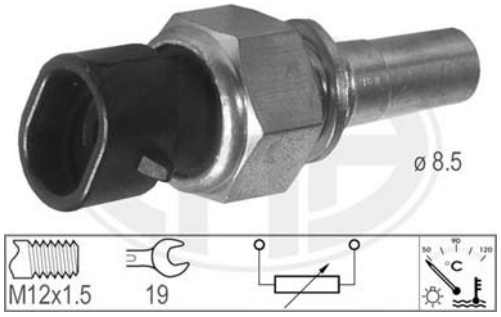

LADA
2112-3851010

Note: Number of ports : 2

330632 - SENDER UNIT, COOLANT TEMPERATURE

HYUNDAI
39220-38020, 39220-38030, 39230-26700
KIA
39230-26700

HYUNDAI
ACCENT, COUPE, GETZ, MATRIX, XG
KIA
MAGENTIS

Note: Number of ports : 3

330635 - SENDER UNIT, COOLANT TEMPERATURE

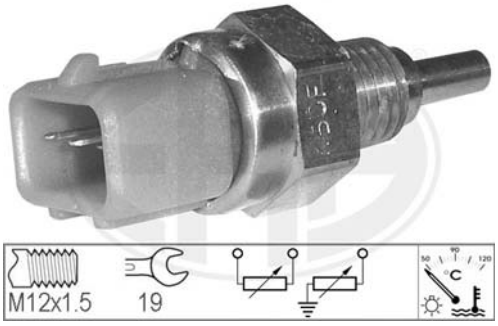

GENERAL MOTORS
10 083 510
KIA
0K50F-18-840

KIA
RIO, SHUMA

Note: Number of ports : 3

330636 - SENDER UNIT, COOLANT TEMPERATURE

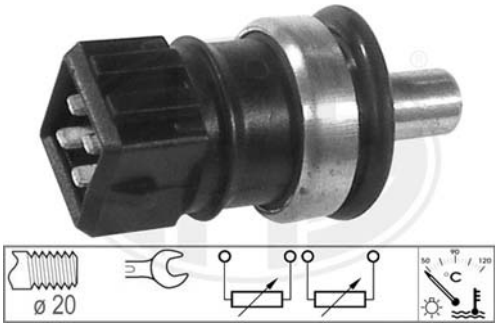

VW
058 919 501 A

AUDI
A4, A6, COUPE

Note: Number of ports : 4

330638 - SENDER UNIT, COOLANT TEMPERATURE

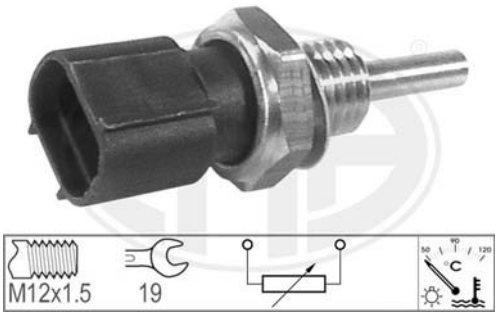

SUBARU
22630-AA040, 22630-AA041

SUBARU
FORESTER, IMPREZA, LEGACY

Note: Number of ports : 2

330639 - SENDER UNIT, COOLANT TEMPERATURE

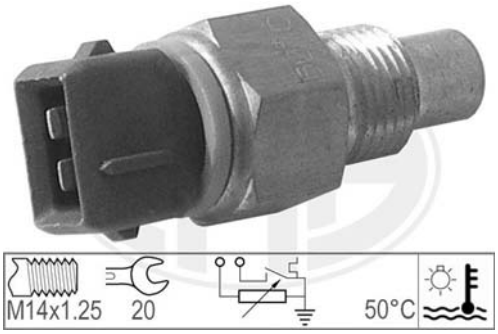

CITROENPEUGEOT
1338 43, 96 203 847
FIAT
9620384780
HYUNDAI
94655-29000
SUZUKI
13651-86CA0

CITROËN
BERLINGO, C15, JUMPER, XANTIA, XSARA, ZX
FIAT
DUCATO
HYUNDAI
LANTRA
PEUGEOT
306, 405, BOXER, PARTNER
SUZUKI
VITARA

Note: Number of ports : 2

330640 - SENDER UNIT, COOLANT TEMPERATURE

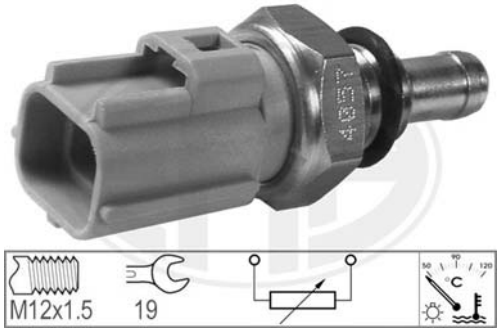

FORD
1047284, 3929104, 4537712, 978F 12A648 AA, F77Z 12A648 AA, XU3F 12A648 AA
JAGUAR
LRA 1600BA
MAZDA
FSB9-18-840, LF01-18-840
VOLVO
30658181, 30777334

FORD
C-MAX, ESCORT, ESCORT CLASSIC, FIESTA, FOCUS C-MAX, GALAXY, MONDEO, S-MAX, TRANSIT
FORD USA
EXPLORER
JAGUAR
S-TYPE, XJ, XK, XK 8
MAZDA
3, 5, 6, 626, CX-7, MPV, MX-5
VOLVO
C30, S40, S80, V50, V70

Note: Number of ports : 2

330641 - SENDER UNIT, COOLANT TEMPERATURE

FIAT
7735919

ALFA ROMEO
145, 146, 155
FIAT
BRAVA, BRAVO, FIORINO, FIORINO Pick up, MAREA, PALIO, PUNTO, SIENA, STRADA, TEMPRA, TIPO
LANCIA
DEDRA, DELTA

Note: Number of ports : 2

330642 - SENDER UNIT, COOLANT TEMPERATURE

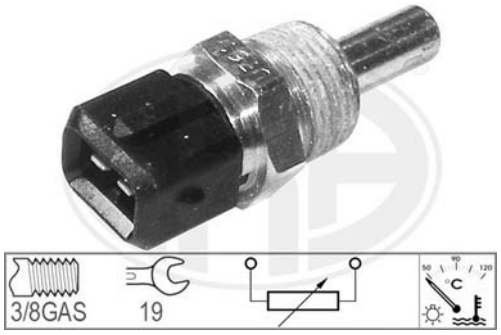

HYUNDAI
39220-35510, 39220-35520, 39220-3C100
MITSUBISHI
MD149338
OPEL
13 41 031, 13 41 038, 97 036 606, 97 069 786

HYUNDAI
GALLOPER, GRANDEUR, H-1, H100, LANTRA, SANTA Fx83 , SANTAMO, SONATA, STAREX
KIA
CARENS III, CARNIVAL, JOICE, MAGENTIS, OPIRUS
MITSUBISHI
3000 GT, COLT, L 300, L 400, LANCER, PAJERO, SPACE GEAR, SPACE RUNNER, SPACE WAGON
OPEL
CAMPO, MONTEREY

Note: Number of ports : 2

330643 - SENDER UNIT, COOLANT TEMPERATURE

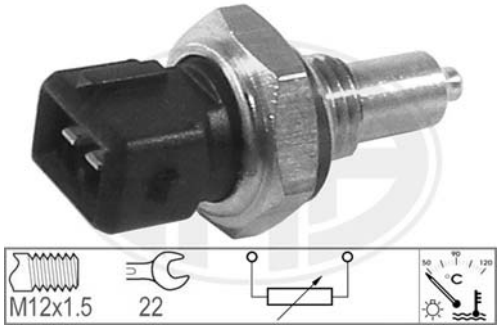

BMW
13 62 1 433 076, 23 01 7 838 935
LAND ROVER
MEK 000030L, MEK 100170L, MEK 500130, NSC 100870L

BMW
1, 3, 5, 6, 7, X3, X5, X6, Z3, Z4
LAND ROVER
DISCOVERY, FREELANDER
MG
MG TF, MG ZR, MG ZS, MG ZT, MG ZT-T, MGF
ROVER
200, 25, 400, 45, 75

Note: Number of ports : 2

330647 - SENDER UNIT, COOLANT TEMPERATURE

MERCEDES-BENZ
000 542 51 18, 000 905 07 00
MITSUBISHI
MN960160
SMART
0003118V00200000

MERCEDES-BENZ
A-CLASS, B-CLASS, C-CLASS, CLC-CLASS, CLK, CLS, E-CLASS, G-CLASS, M-CLASS,R-CLASS, S-CLASS, SL, SLK, SLR, SLR ROADSTER, SPRINTER, SPRINTER 2-t, SPRINTER 3-t, V-CLASS, VANEO, VIANO, VITO, VITO / MIXTO
MITSUBISHI
COLT
PUCH
G-MODELL
SMART
CABRIO, CITY-COUPE, CROSSBLADE, FORFOUR, FORTWO, ROADSTER

Note: Number of ports : 2

330648 - SENDER UNIT, COOLANT TEMPERATURE

HONDA
37870 PLC 004, 37870 PNA 003, 37870 RAA A01

HONDA
ACCORD, CITY, CIVIC, CR-V, FR-V, JAZZ, LEGEND, STREAM

Note: Number of ports : 2

330650 - SENDER UNIT, COOLANT TEMPERATURE

CHRYSLER
33004281, 5226374

CHRYSLER
LE BARON, NEON, NEW YORKER, VOYAGER

Note: Number of ports : 2

330651 - SENDER UNIT, COOLANT TEMPERATURE

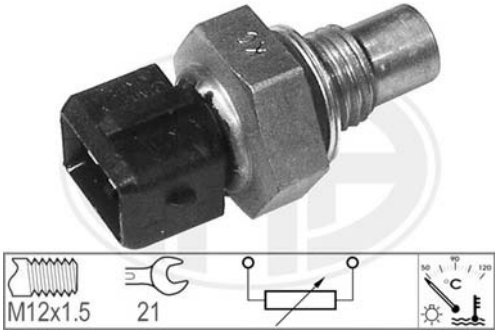

DAEWOO
90 411 977, 96 279 857, 96 325 864, 96 815 490
GENERAL MOTORS
96 325 864, 96 815 490
RENAULT
77 00 743 684
VOLVO
3447882-6

CHEVROLET
AVEO, EPICA, KALOS, MATIZ, SPARK
DAEWOO
KALOS, MATIZ
OPEL
ASTRA, CALIBRA, OMEGA, VECTRA
RENAULT
19
VAUXHALL
ASTRA, CALIBRA, CAVALIER, OMEGA, VECTRA
VOLVO
440, 460, 480

Note: Number of ports : 2

330652 - SENDER UNIT, COOLANT TEMPERATURE

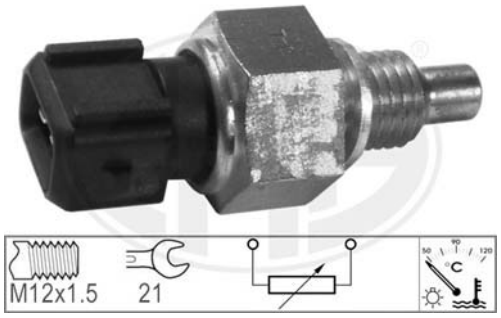

VOLVO
9186008

VOLVO
S40, V40

Note: Number of ports : 2

330653 - SENDER UNIT, COOLANT TEMPERATURE

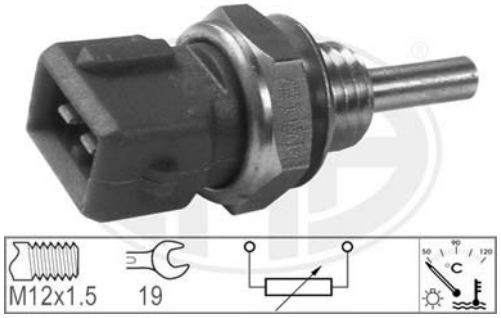

NISSAN
22630-70J00

NISSAN
PRIMERA

Note: Number of ports : 2

330654 - SENDER UNIT, COOLANT TEMPERATURE

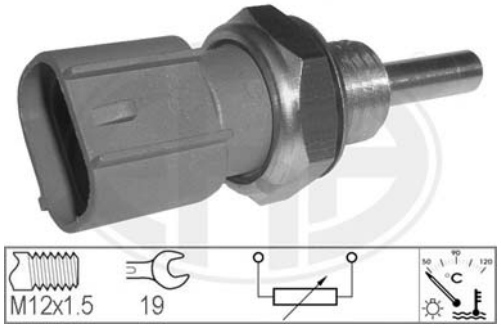

SUZUKI
13650-64B00

SUZUKI
SWIFT

Note: Number of ports : 2

330655 - SENDER UNIT, COOLANT TEMPERATURE

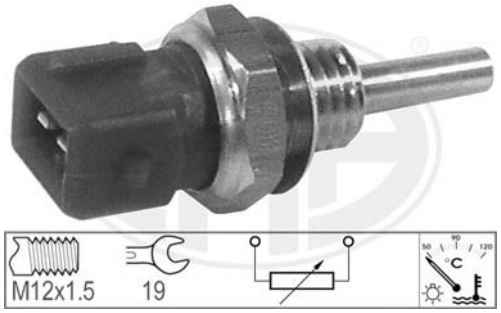

KIA
0K011 18 840, 0K95B 18 840
NISSAN
22630-51E02, 22630-51E10, 22630-D5900

FORD
MAVERICK
INFINITI
J30, Q45
KIA
AVELLA, CARNIVAL, CLARUS, PRIDE, RETONA, SEPHIA, SHUMA, SPORTAGE
NISSAN
100 NX, 200 SX, 300 ZX, BLUEBIRD, LAUREL, PATHFINDER, PATROL GR, PRAIRIE PRO, PRIMERA, SUNNY, TERRANO, URVAN, VANETTE

Note: Number of ports : 2

330656 - SENDER UNIT, COOLANT TEMPERATURE

FIAT
7669143

FIAT
TEMPRA, TIPO, UNO
LANCIA
DEDRA, DELTA

Note: Number of ports : 2

330657 - SENDER UNIT, COOLANT TEMPERATURE

CITROENPEUGEOT
1338 75, 1338 91
RENAULT
96 23 870 180

CITROËN
XANTIA, XM
PEUGEOT
406
RENAULT
ESPACE, LAGUNA

Note: Number of ports : 2

330658 - SENDER UNIT, COOLANT TEMPERATURE

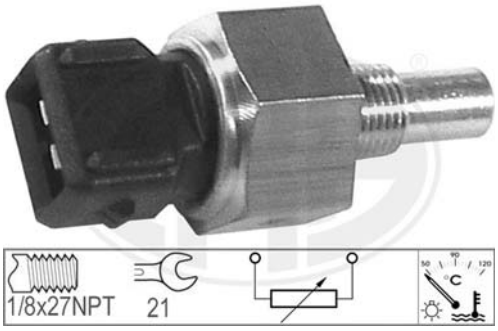

VOLVO
30862221

VOLVO
S40, V40

Note: Number of ports : 2

330659 - SENDER UNIT, COOLANT TEMPERATURE

CHRYSLER
56004815

JEEP
GRAND CHEROKEE

Note: Number of ports : 2

330660 - SENDER UNIT, COOLANT TEMPERATURE

HYUNDAI
94650-21020

HYUNDAI
EXCEL, PONY, STELLAR

Note:

330661 - SENDER UNIT, COOLANT TEMPERATURE

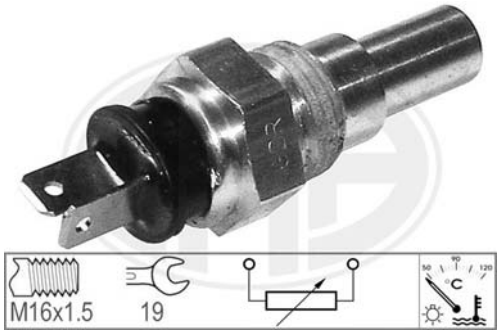

HYUNDAI
94650-42050, 94650-42051

HYUNDAI
Galloper, H1, H100, Libero, Terracan

Note: Number of ports : 2

330662 - SENDER UNIT, COOLANT TEMPERATURE

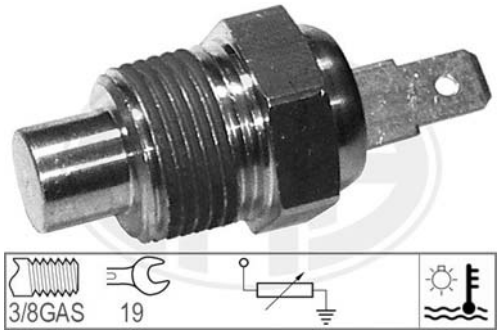

HYUNDAI
94650-42060, 94650-42061

HYUNDAI
Galloper, H1, H100, Terracan

Note:

330663 - SENDER UNIT, COOLANT TEMPERATURE

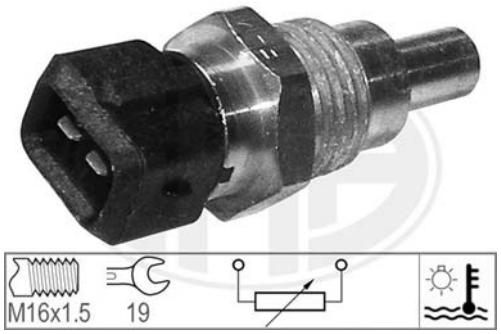

HYUNDAI
39230-42000

HYUNDAI
Galloper, H1, H100, Terracan

Note: Number of ports : 2

330664 - SENDER UNIT, COOLANT TEMPERATURE

HYUNDAI
39220-38010
KIA
39220-38010

HYUNDAI
CM10, I10, Santa Fè, Sonata, TM 10, Tucson

Note: Number of ports : 4

330665 - SENDER UNIT, COOLANT TEMPERATURE

HYUNDAI
39220-02510

CHEVROLET
AVEO, KALOS, MATIZ, SPARK
DAEWOO
KALOS, MATIZ
HYUNDAI
ATOS, ATOS PRIME

Note: Number of ports : 4

330670 - SENDER UNIT, COOLANT TEMPERATURE

HYUNDAI
25360-34000

HYUNDAI
H100, Sonata

Note: Number of ports : 2

330671 - SENDER UNIT, COOLANT TEMPERATURE

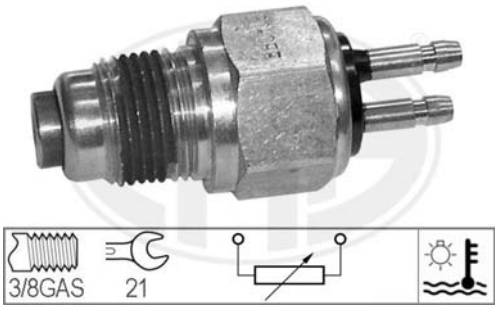

KIA
0PN11-18-840

KIA
Besta, Ceres, Pregio

Note:

330677 - SENDER UNIT, COOLANT TEMPERATURE

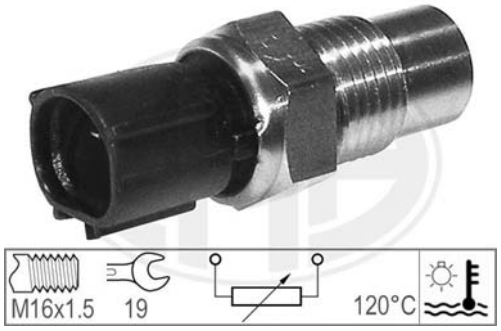

HYUNDAI
93920-37100

HYUNDAI
Elantra, H1, Libero, Sonata

Note: Number of ports : 2

330678 - SENDER UNIT, COOLANT TEMPERATURE

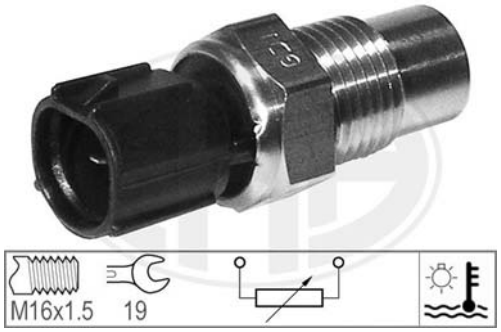

HYUNDAI
25360-37230

HYUNDAI
Elantra, H1, Libero, Sonata

Note: Number of ports : 2

330679 - SENDER UNIT, COOLANT TEMPERATURE

HYUNDAI
97724-43020

HYUNDAI
H100

Note:

330680 - SENDER UNIT, COOLANT TEMPERATURE

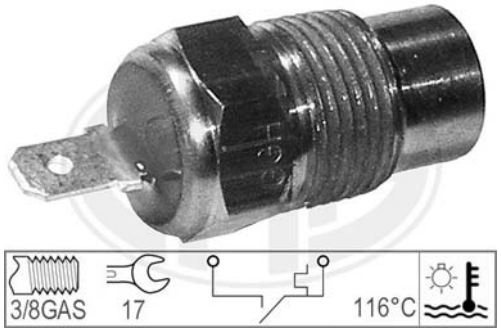

HYUNDAI
97724-47000

HYUNDAI
GALLOPER, TERRACAN

Note:

	Suitable to:	Used on:
330683 - SENDER UNIT, COOLANT TEMPERATURE	**BMW** 13 62 1 433 077, 13 62 7 788 077 **LAND ROVER** MEK 105210, NSC 000100	**BMW** 1, 3, 5, 6, 7, X3, X5, X6, Z4, Z8 **LAND ROVER** RANGE ROVER

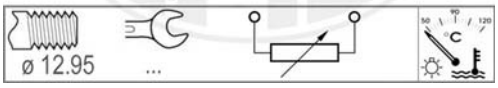

Note: Number of ports : 2

330688 - SENDER UNIT, COOLANT TEMPERATURE	**FIAT** 4746856	

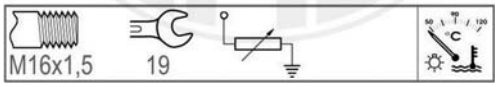

Note:

330691 - SENDER UNIT, COOLANT TEMPERATURE	**ALFA ROMEO** 119 11 11 010 00, 60523383 **BMW** 13 62 1 357 414 **FORD** 1957002 **JAEGER** 50060 **NISSAN** 11023-V700, 22630-10G00, 22630-G2402, 22630-G2404, 22630-N4200 **RENAULT** 77 00 582 688 **SKODA** 004 435 010	**ALFA ROMEO** 75, 90 **BMW** 3, 5 **FORD** MAVERICK **NISSAN** BLUEBIRD, LAUREL, PATROL, PATROL GR, PRIMERA, SUNNY, TERRANO, URVAN **RENAULT** 25 **SKODA** FAVORIT

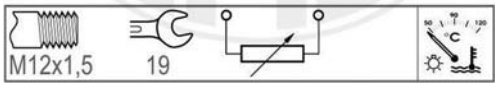

Note: Number of ports : 2

330692 - SENDER UNIT, COOLANT TEMPERATURE	**GENERAL MOTORS** 9 110 578 **MITSUBISHI** M883623 **NISSAN** 22630-00QAD, 22630-00QAF, 22630-BN702 **OPEL** 44 02 578 **RENAULT** 60 01 545 356, 77 00 105 087 **SUZUKI** 13650-84CT0-000, 13660-84A00-000 **VOLVO** 30883623	**DACIA** DUSTER, LOGAN, LOGAN MCV, SANDERO **MITSUBISHI** CARISMA, SPACE STAR **NISSAN** INTERSTAR, KUBISTAR, MICRA, NOTE, PRIMASTAR, PRIMERA, QASHQAI, TIIDA **OPEL** MOVANO, VIVARO **RENAULT** AVANTIME, CLIO, CLIO Grandtour, ESPACE, FLUENCE, GRAND SCENIC, KANGOO, KANGOO BE BOP, LAGUNA, LOGAN, MASTER, MEGANE, MEGANE CC, MODUS, SCENIC, THALIA, TRAFIC II, TWINGO, VEL SATIS **SUZUKI** GRAND VITARA, JIMNY **VAUXHALL** MOVANO, VIVARO **VOLVO** S40, V40

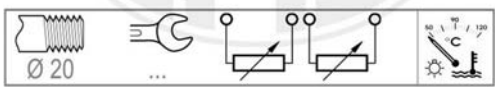

Note: Number of ports : 4

	Suitable to:	Used on:
330693 - SENDER UNIT, COOLANT TEMPERATURE	**FIAT** 46824133, 71716685, 71719393	**FIAT** DOBLO, PALIO, PANDA, PUNTO, SEICENTO, SIENA, STRADA **LANCIA** YPSILON

Note: Number of ports : 2

330742 - SENDER UNIT, COOLANT TEMPERATURE 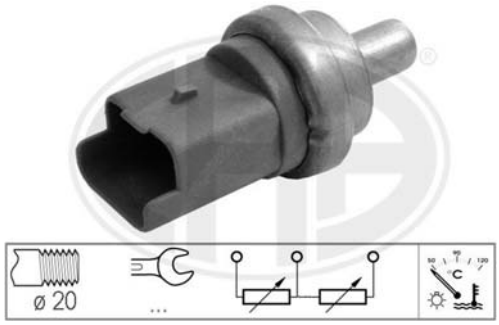	**CITROENPEUGEOT** 1338 C0 **FIAT** 9633518580	**CITROËN** BERLINGO, JUMPER, XSARA **FIAT** DUCATO **PEUGEOT** 206, 306, BOXER, PARTNER

Note: Number of ports : 3

ERA S.p.A. Moncalieri (TO) Italy - tel: +39 011 6891511 - fax: +39 011 6472862 - www.eranet.it

330556 - TEMPERATURE SWITCH, COOLANT WARNING LAMP

CITROENPEUGEOT
1338 40
SUZUKI
13655-66G00

CITROËN
JUMPER, XANTIA
PEUGEOT
BOXER
SUZUKI
BALENO

Note: Number of ports : 1

330557 - TEMPERATURE SWITCH, COOLANT WARNING LAMP

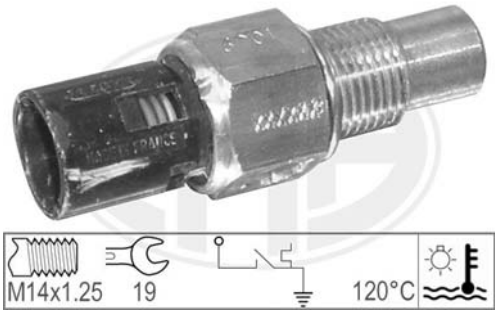

RENAULT
77 00 809 907

RENAULT
KANGOO, SAFRANE, TWINGO

Note: Number of ports : 1

330575 - TEMPERATURE SWITCH, COOLANT WARNING LAMP

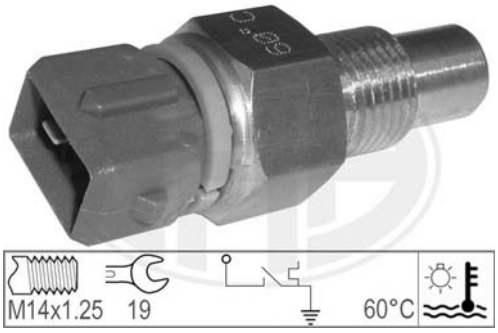

CITROENPEUGEOT
1338 27, 96 142 336
FIAT
9614233680
SUZUKI
34850-86CB0

CITROËN
EVASION, JUMPER, JUMPY, XANTIA, XSARA, ZX
FIAT
DUCATO, SCUDO, ULYSSE
PEUGEOT
306, 405, 406, 806, BOXER, EXPERT
SUZUKI
BALENO, SAMURAI, VITARA

Note: Number of ports : 1

330637 - TEMPERATURE SWITCH, COOLANT WARNING LAMP

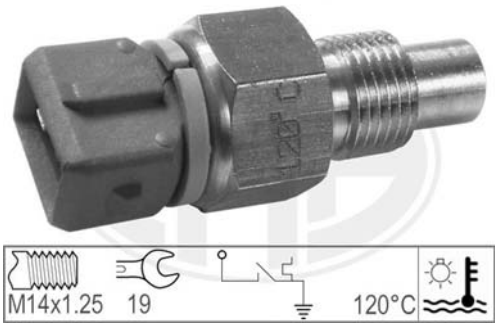

CITROENPEUGEOT
0242 86

CITROËN
AX, BERLINGO, C2, C3, C4, SAXO, XSARA, XSARA PICASSO
PEUGEOT
1007, 106, 206, 207, 306, 307, 308 SW, PARTNER, PARTNER Tepee

Note: Number of ports : 1

330645 - TEMPERATURE SWITCH, COOLANT WARNING LAMP

CITROENPEUGEOT
0242 76, 96 092 918
FIAT
9609291880

CITROËN
EVASION, XSARA, ZX
PEUGEOT
206, 307, 406, 607

Note: Number of ports : 1

330646 - TEMPERATURE SWITCH, COOLANT WARNING LAMP

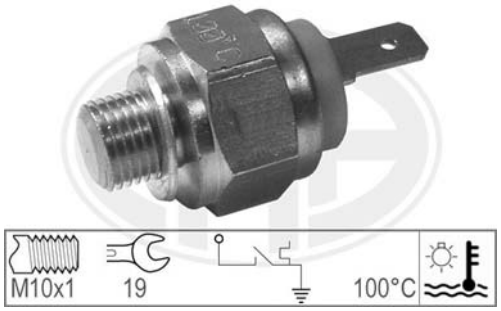

VW
191 919 521 D

SEAT
CORDOBA, IBIZA, INCA
VW
CADDY, GOLF, POLO

Note:

330164 - TEMPERATURE SWITCH, RADIATOR FAN

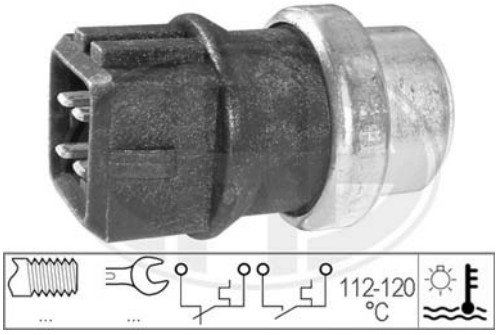

FORD
7210733, 95VW 8B607 EA, 95VW 8B607 FA
VW
357 919 369 E

AUDI
A3
FORD
GALAXY
SEAT
ALHAMBRA, CORDOBA, IBIZA, TOLEDO
SKODA
OCTAVIA
VW
BORA, CADDY, CORRADO, GOLF, JETTA, NEW BEETLE, PASSAT, POLO, SHARAN, TRANSPORTER, VENTO

Note: Number of ports : 4

330165 - TEMPERATURE SWITCH, RADIATOR FAN

ALFA ROMEO
130884, 533309, 60503687, 60745532
FIAT
4111819
VW
SE 127952.600B

ALFA ROMEO
164, 33, ALFASUD
FSO
POLONEZ
SEAT
MALAGA

Note:

330166 - TEMPERATURE SWITCH, RADIATOR FAN

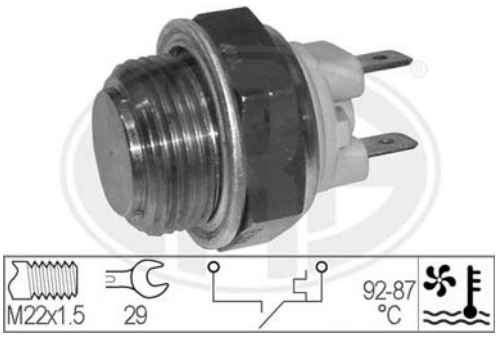

SAAB
8533226, 8561367, 8569238, 9526518
VW
823 959 481 A, 823 959 481 F

SAAB
90

Note:

330167 - TEMPERATURE SWITCH, RADIATOR FAN

CITROENPEUGEOT
1264 14, 91 514 046
RENAULT
77 01 348 194

CITROËN
BX, C15
PEUGEOT
104, 205, 305, 309, 505, 604
RENAULT
11, 14, 18, 9
TALBOT
SAMBA

Note:

330168 - TEMPERATURE SWITCH, RADIATOR FAN

CITROENPEUGEOT
5446115, 5453674
FORD
6077896, 6077897, 6077985, 6104433, 6104434, 77FB 8B607 A3D, 78FB 000 8B607 A, 81AB 8B607 A1A, 81AB 8B607 A2A, D8RZ 8B607 C
LAND ROVER
PRC3366, PRC3505
OPEL
13 41 002, 13 41 007, 90 108 636

FORD
ESCORT, FIESTA, ORION
LAND ROVER
90/110, DISCOVERY, RANGE ROVER

Note: Number of ports : 2

330169 - TEMPERATURE SWITCH, RADIATOR FAN

CITROENPEUGEOT
1264 05, 1264 09, 1264 12, 1264 15
JAGUAR
EAC 2510
RENAULT
77 00 618 658, 77 00 622 019, 77 00 759 441, 77 01 348 765, 77 01 349 694

ALPINE
V6
PEUGEOT
305, 504, 505
RENAULT
20, 21, 25, 4, 5, ESPACE, MASTER, RAPID, SUPER 5

Note: Number of ports : 2

330170 - TEMPERATURE SWITCH, RADIATOR FAN

FIAT
4338581
VW
115 095 070

SKODA
FAVORIT, FELICIA

Note: Number of ports : 2

330171 - TEMPERATURE SWITCH, RADIATOR FAN

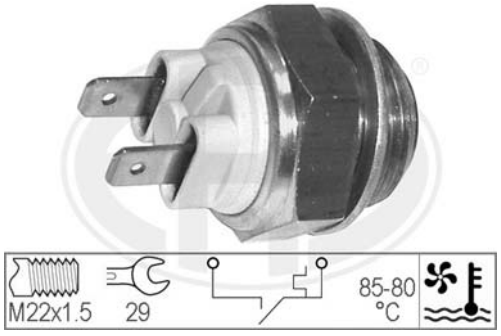

CITROENPEUGEOT
95 493 258

CITROËN
CX, VISA

Note: Number of ports : 2

330172 - TEMPERATURE SWITCH, RADIATOR FAN

CITROENPEUGEOT
95 492 854, 95 632 734
LAND ROVER
PRC3541
OPEL
13 41 003, 90 087 398
VW
113 095 070, 113 095 073, 114 095 070,
175 959 481, 823 959 481 G, 823 959 481 K

CITROËN
AX, CX
LAND ROVER
90/110
OPEL
KADETT
SKODA
105,120
VW
DERBY

Note: Number of ports : 2

330173 - TEMPERATURE SWITCH, RADIATOR FAN

RENAULT
77 00 268 534, 77 00 268 709

Note: Number of ports : 2

330174 - TEMPERATURE SWITCH, RADIATOR FAN

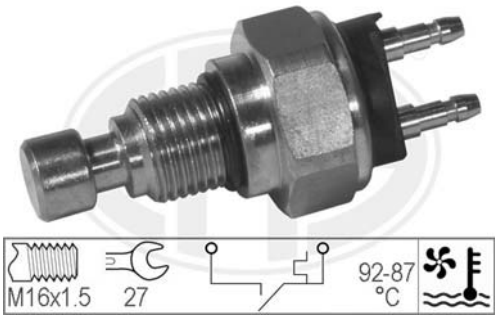

HONDA
37760 634 005, 37760 PB2 003
SUZUKI
17680-78000

ACURA
INTEGRA
HONDA
CIVIC, JAZZ, QUINTET
ROVER
200

Note: Number of ports : 2

330175 - TEMPERATURE SWITCH, RADIATOR FAN

VOLVO
3416584
VW
SE 021 952 600 A

SEAT
IBIZA, MARBELLA, TERRA

Note: Number of ports : 2

330176 - TEMPERATURE SWITCH, RADIATOR FAN

MAZDA
B 303 18 840, E 301 18 840 A, F 8B8 18 840, F 8B8 18 840A

MAZDA
121, 323, 626, 929, RX 7

Note:

330177 - TEMPERATURE SWITCH, RADIATOR FAN

NISSAN
21595-Q9025
ROVER
BHM 7282, BHM 7367, CDU 1500, GVS 104, GVS 125, KTP 9017

AUSTIN
MONTEGO
MG
MG ZR
NISSAN
BLUEBIRD
ROVER
100, 100 (METRO), 200, 25, 400, 45, 800, MAESTRO, MONTEGO

Note: Number of ports : 2

330178 - TEMPERATURE SWITCH, RADIATOR FAN

FIAT
1307077080, 7586250
OPEL
13 41 028, 90 357 303

FIAT
RITMO
OPEL
ASTRA, ASTRA F CLASSIC, CALIBRA, VECTRA

Note: Number of ports : 2

330179 - TEMPERATURE SWITCH, RADIATOR FAN

FIAT
46520219, 7570837
OPEL
13 41 021

FIAT
CINQUECENTO, REGATA, RITMO, SEICENTO

Note: Number of ports : 2

330180 - TEMPERATURE SWITCH, RADIATOR FAN

CITROENPEUGEOT
1264 23, 96 009 503, 96 064 561
SUZUKI
35331-86CA0, 35331-86CB0

CITROËN
XM
PEUGEOT
205, 309, 405

Note: Number of ports : 2

330181 - TEMPERATURE SWITCH, RADIATOR FAN

OPEL
09 110 309, 44 02 309
RENAULT
77 00 782 503, 77 00 796 048

OPEL
ARENA, MOVANO
RENAULT
19, 21, 25, CLIO, ESPACE, KANGOO, LAGUNA, MASTER, MEGANE, RAPID, SAFRANE, SCENIC, SUPER 5, TRAFIC, TWINGO

Note: Number of ports : 2

330182 - TEMPERATURE SWITCH, RADIATOR FAN

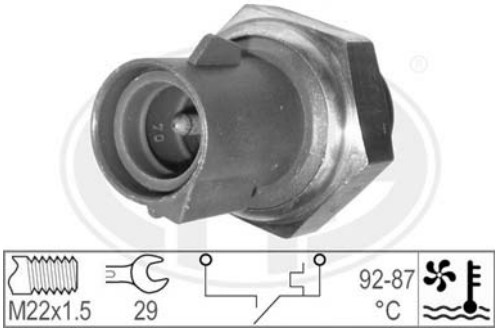

FORD
1646398, 6146107, 6146110, 6168439, 6169111, 6169112, 6169113, 6496665, 7001608, 85AB 8B607 A2B, 85AB 8B607 A3A, 85AB 8B607 A3B, 89FB 8B607 A1A, 89FB 8B607 AA, 89FB 8B607 AB

FORD
ESCORT, ESCORT CLASSIC, FIESTA, MONDEO, ORION, P 100, SIERRA

Note: Number of ports : 2

330183 - TEMPERATURE SWITCH, RADIATOR FAN

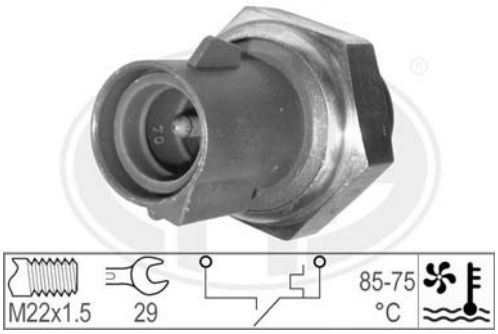

FORD
6144361, 7001614, 85BB 8B607 BA, 85BB 8B607 BB

FORD
GRANADA, SCORPIO, SIERRA

Note: Number of ports : 2

330184 - TEMPERATURE SWITCH, RADIATOR FAN

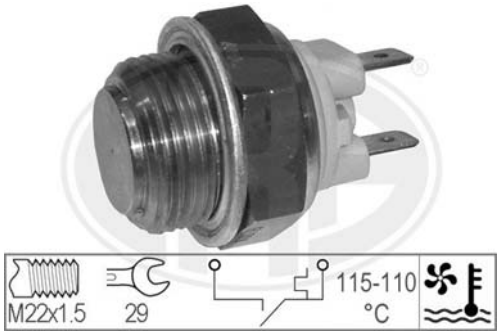

LAND ROVER
PRC3359
MERCEDES-BENZ
002 545 79 34
SAAB
4086724, 8572331, 9526526, 9552878

LAND ROVER
90/110, DEFENDER, DISCOVERY, RANGE ROVER
MERCEDES-BENZ
V-CLASS, VITO
SAAB
900, 9000

Note: Number of ports : 2

330185 - TEMPERATURE SWITCH, RADIATOR FAN

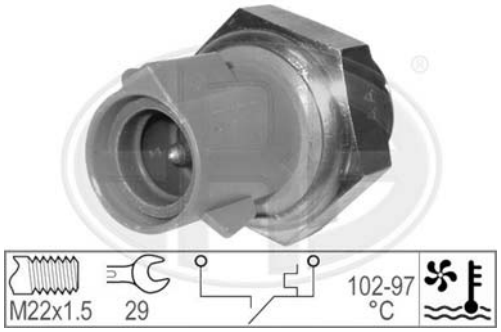

FORD
1652990, 6142676, 6186463, 6186464, 7001611, 85GB 8B607 B1A, 92AB 8B607 AA

FORD
CORTINA, ESCORT, FIESTA, FOCUS, ORION, P 100, SCORPIO, SIERRA

Note: Number of ports : 2

330186 - TEMPERATURE SWITCH, RADIATOR FAN

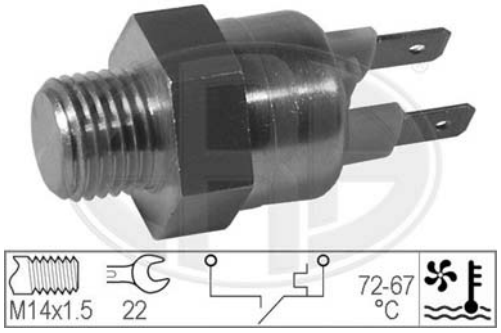

VOLVO
3211204 7

VOLVO
340-360

Note: Number of ports : 2

330187 - TEMPERATURE SWITCH, RADIATOR FAN

HONDA
37773 P5T G10, 37773 PDD E11
ROVER
CDU 1490, GVS 105

HONDA
ACCORD
MG
MG ZR
ROVER
200, 25, 400, 45, 600, 800, CABRIOLET

Note: Number of ports : 2

330188 - TEMPERATURE SWITCH, RADIATOR FAN

CITROENPEUGEOT
1264 26, 1264 37, 1264 40, 96 138 637
FIAT
9606456180, 9629968880

CITROËN
AX, BERLINGO, EVASION, JUMPY, SAXO, XANTIA, XSARA, XSARA PICASSO, ZX
FIAT
SCUDO, ULYSSE
LANCIA
ZETA
PEUGEOT
106, 205, 206, 306, 309, 405, 406, 806, EXPERT, PARTNER

Note: Number of ports : 2

330189 - TEMPERATURE SWITCH, RADIATOR FAN

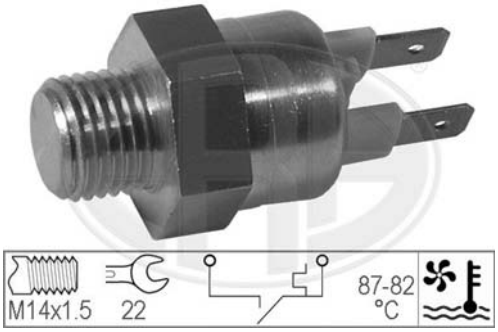

VOLVO
3286641 0

PORSCHE
928
VOLVO
340-360

Note: Number of ports : 2

330190 - TEMPERATURE SWITCH, RADIATOR FAN

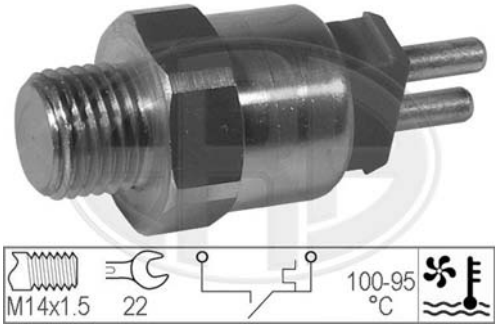

MERCEDES-BENZ
006 545 15 24, 006 545 40 24

MERCEDES-BENZ
190, COUPE, E-CLASS, G-CLASS, KOMBI, S-CLASS, V-CLASS
PUCH
G-MODELL

Note: Number of ports : 2

330191 - TEMPERATURE SWITCH, RADIATOR FAN

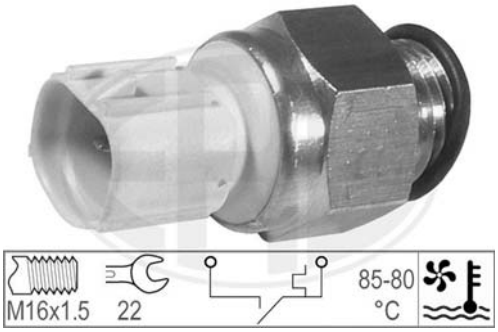

MITSUBISHI
MB660663, MB845063

MITSUBISHI
3000 GT, COLT, GALANT, LANCER, SPACE RUNNER, SPACE WAGON

Note: Number of ports : 2

330192 - TEMPERATURE SWITCH, RADIATOR FAN

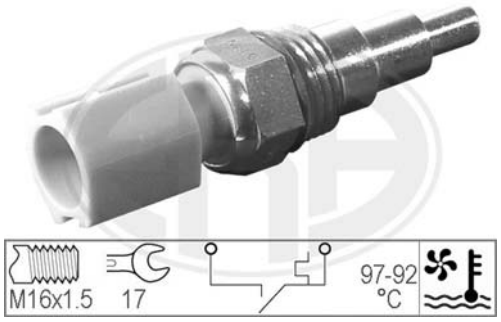

KIA
0N350 18 840
MAZDA
N350-18-840

MAZDA
121, 323, 323 C, 323 F, 323 S, 626, MX-3, MX-5

Note: Number of ports : 2

330193 - TEMPERATURE SWITCH, RADIATOR FAN

HONDA
37760 P00 003, 37760 P00 004, 37760 PLZ E01
ISUZU
5-86004-751-0, 5-86004-752-0, 5-86202-839-0
ROVER
GTR 274, PEJ 100110, PEJ 100120

HONDA
ACCORD, CIVIC, CR-V, CRX, HR-V, INTEGRA, JAZZ, LOGO, SHUTTLE, STREAM
ROVER
400, 600

Note: Number of ports : 2

330194 - TEMPERATURE SWITCH, RADIATOR FAN

CITROENPEUGEOT
1264 31, 1264 43, 96 138 637

CITROËN
BERLINGO, XANTIA, ZX
PEUGEOT
306, PARTNER

Note: Number of ports : 2

330195 - TEMPERATURE SWITCH, RADIATOR FAN

KIA
K201 18 840
MAZDA
B 6S7 18 840

MAZDA
121, 323 C, 323 F, 323 S, 626, MX-5

Note: Number of ports : 2

330196 - TEMPERATURE SWITCH, RADIATOR FAN

HONDA
37773 P5T G00, 37773 PDD E01
ROVER
GVS 123, KTP 9940, PEJ 10003

HONDA
ACCORD
ROVER
100, 100 (METRO), 200, 400, 600, CABRIOLET

Note: Number of ports : 2

330197 - TEMPERATURE SWITCH, RADIATOR FAN

CITROENPEUGEOT
1264 50
FIAT
1307077080

CITROËN
JUMPER
FIAT
DUCATO
PEUGEOT
BOXER

Note: Number of ports : 2

330198 - TEMPERATURE SWITCH, RADIATOR FAN

OPEL
13 41 045, 90 508 084

OPEL
VECTRA

Note: Number of ports : 2

330199 - TEMPERATURE SWITCH, RADIATOR FAN

VW
1J0 959 481, 6X0 959 481

AUDI
A3
SEAT
AROSA, CORDOBA, IBIZA, LEON, TOLEDO
SKODA
FABIA, OCTAVIA, ROOMSTER, ROOMSTER Praktik
VW
BORA, GOLF, LUPO, POLO

Note: Number of ports : 2

	Suitable to:	Used on:
330200 - TEMPERATURE SWITCH, RADIATOR FAN	**FIAT** 5977192, 7583398	**FIAT** REGATA, RITMO
Note: Number of ports : 3		
330201 - TEMPERATURE SWITCH, RADIATOR FAN	**CITROENPEUGEOT** 1264 10 **FIAT** 5934064, 5934084, 5951524	**FIAT** ARGENTA, DUCATO, RITMO, TALENTO
Note: Number of ports : 3		
330202 - TEMPERATURE SWITCH, RADIATOR FAN	**FIAT** 5958828, 7576281, 7628799, 7695951	**FIAT** DUNA, ELBA, FIORINO, FIORINO Pick up, REGATA, RITMO, UNO **INNOCENTI** ELBA
Note: Number of ports : 3		
330203 - TEMPERATURE SWITCH, RADIATOR FAN	**CITROENPEUGEOT** 1264 17, 95 495 385, 95 576 325, 95 612 640	**CITROËN** BX, C15 **PEUGEOT** 205, 305, 309, 505
Note: Number of ports : 3		

330204 - TEMPERATURE SWITCH, RADIATOR FAN

VW
251 959 481 C, 251 959 481 D

VW
TRANSPORTER

Note: Number of ports : 3

330205 - TEMPERATURE SWITCH, RADIATOR FAN

ALFA ROMEO
60543482, 60593572, 60806748
FIAT
7576345, 7596228

ALFA ROMEO
145, 146, 155, 164
FIAT
TIPO
LANCIA
DEDRA

Note: Number of ports : 3

330206 - TEMPERATURE SWITCH, RADIATOR FAN

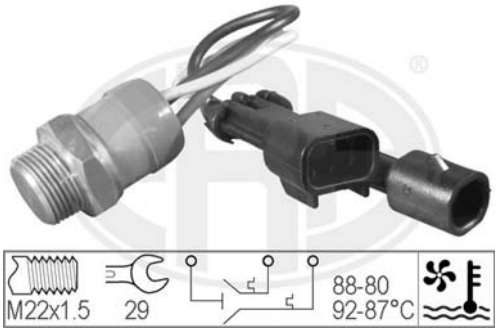

ALFA ROMEO
60565842, 60593573
FIAT
46412308, 7576327, 7695951

ALFA ROMEO
155, 164
FIAT
CROMA, PANDA, TIPO
LANCIA
DEDRA, DELTA, PRISMA, THEMA

Note: Number of ports : 3

330207 - TEMPERATURE SWITCH, RADIATOR FAN

CITROENPEUGEOT
1264 18, 1264 32, 91 517 674, 96 019 305
FIAT
82477919

CITROËN
BX, C15
PEUGEOT
205, 305, 309, 405, 505

Note: Number of ports : 3

330208 - TEMPERATURE SWITCH, RADIATOR FAN

BMW
61 31 1 378 073

BMW
3, 5, 7, 8, Z3

Note: Number of ports : 3

330209 - TEMPERATURE SWITCH, RADIATOR FAN

RENAULT
77 00 777 683, 7700782694

ALPINE
V6
RENAULT
21, 25, ESPACE, MASTER

Note: Number of ports : 3

330210 - TEMPERATURE SWITCH, RADIATOR FAN

OPEL
13 41 009, 90 247 345

OPEL
CORSA, KADETT, SENATOR

Note: Number of ports : 3

330211 - TEMPERATURE SWITCH, RADIATOR FAN

FORD
6154134, 7001605, 87BB 8B607 AA,
87BB 8B607 AB

FORD
ESCORT, FIESTA, ORION, SCORPIO, SIERRA

Note: Number of ports : 4

330212 - TEMPERATURE SWITCH, RADIATOR FAN

VW
251 959 481 G, 251 959 481 K

AUDI
A8
VW
TRANSPORTER

Note: Number of ports : 3

330213 - TEMPERATURE SWITCH, RADIATOR FAN

SAAB
4086682, 9567967

SAAB
9000

Note: Number of ports : 3

330214 - TEMPERATURE SWITCH, RADIATOR FAN

RENAULT
77 00 798 264

RENAULT
21, MASTER, SAFRANE

Note: Number of ports : 3

330215 - TEMPERATURE SWITCH, RADIATOR FAN

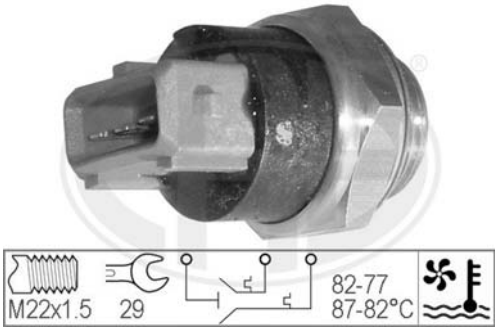

CITROENPEUGEOT
1264 27, 96 085 909

CITROËN
XANTIA, XM
PEUGEOT
205, 605

Note: Number of ports : 3

330216 - TEMPERATURE SWITCH, RADIATOR FAN

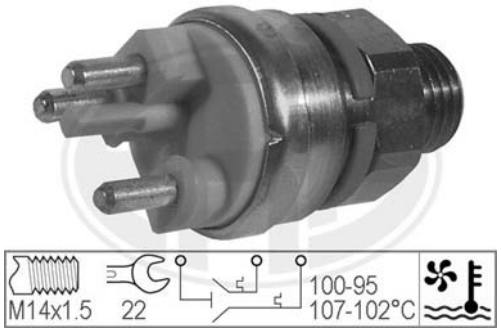

MERCEDES-BENZ
006 545 42 24

MERCEDES-BENZ
190, COUPE, E-CLASS, KOMBI

Note: Number of ports : 3

330217 - TEMPERATURE SWITCH, RADIATOR FAN

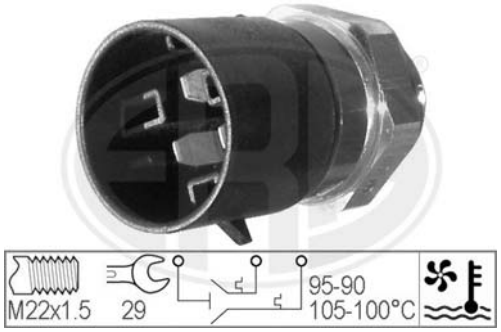

OPEL
13 41 039, 13 41 044, 90 355 880, 91 151 202

OPEL
CALIBRA, FRONTERA, VECTRA

Note: Number of ports : 3

330218 - TEMPERATURE SWITCH, RADIATOR FAN

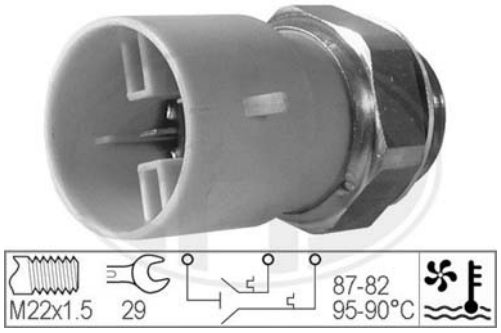

OPEL
13 41 033, 90 341 759

OPEL
ASTRA, CALIBRA, VECTRA

Note: Number of ports : 3

330219 - TEMPERATURE SWITCH, RADIATOR FAN

OPEL
45 00 754, 91 61 054
RENAULT
77 00 839 072, 77 01 036 113

OPEL
MOVANO
RENAULT
ESPACE, KANGOO, LAGUNA, MASTER, MEGANE, SAFRANE, SCENIC

Note: Number of ports : 3

330220 - TEMPERATURE SWITCH, RADIATOR FAN

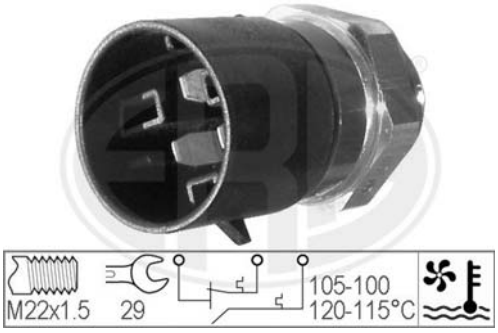

OPEL
18 46 325, 90 376 209

HOLDEN
ASTRA
OPEL
ASTRA, ASTRA F CLASSIC, CALIBRA, CORSA, OMEGA, SINTRA, VECTRA

Note: Number of ports : 3

330221 - TEMPERATURE SWITCH, RADIATOR FAN

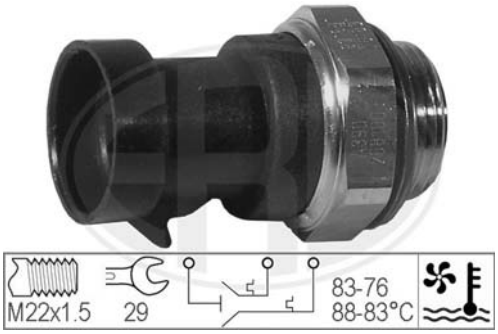

FIAT
46413969, 7745216

FIAT
DUCATO, PUNTO, TALENTO
LANCIA
Y

Note: Number of ports : 3

330222 - TEMPERATURE SWITCH, RADIATOR FAN

VW
701 959 481 C

VW
TRANSPORTER

Note: Number of ports : 3

330223 - TEMPERATURE SWITCH, RADIATOR FAN

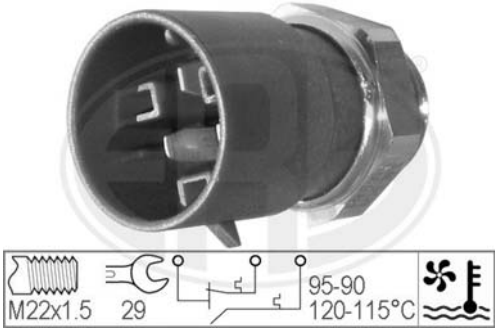

OPEL
18 46 326, 90 357 304

HOLDEN
ASTRA
OPEL
ASTRA, ASTRA F CLASSIC, CALIBRA, VECTRA

Note: Number of ports : 3

330224 - TEMPERATURE SWITCH, RADIATOR FAN

RENAULT
77 01 038 848

RENAULT
TWINGO

Note: Number of ports : 3

330225 - TEMPERATURE SWITCH, RADIATOR FAN

OPEL
18 46 201, 90 482 428

HOLDEN
BARINA
OPEL
COMBO, CORSA, TIGRA

Note: Number of ports : 3

330226 - TEMPERATURE SWITCH, RADIATOR FAN

OPEL
13 41 042, 90 506 498

OPEL
VECTRA

Note: Number of ports : 3

330227 - TEMPERATURE SWITCH, RADIATOR FAN

OPEL
13 41 043, 90 506 499

OPEL
VECTRA

Note: Number of ports : 3

330228 - TEMPERATURE SWITCH, RADIATOR FAN

ALFA ROMEO
60813343
FIAT
46477717, 50005994, 7655732

ALFA ROMEO
145, 146, 155, GTV, SPIDER
FIAT
COUPE, ELBA, FIORINO, PALIO, SIENA, STRADA, TEMPRA, TIPO, UNO
INNOCENTI
ELBA
LANCIA
DEDRA, DELTA, Y10

Note: Number of ports : 3

330229 - TEMPERATURE SWITCH, RADIATOR FAN

FORD
6190786, 7001606, 89BB 8B607 AC

FORD
ESCORT, ESCORT CLASSIC, MONDEO, ORION, SCORPIO

Note: Number of ports : 4

330230 - TEMPERATURE SWITCH, RADIATOR FAN

VW
1J0 959 481 A

AUDI
A3, TT
SEAT
ALTEA, ALTEA XL, CORDOBA, IBIZA, LEON, TOLEDO
SKODA
FABIA, OCTAVIA, ROOMSTER, ROOMSTER Praktik
VW
BORA, CADDY, FOX, GOLF, JETTA, NEW BEETLE, PHAETON, POLO, SPACEFOX, TOUAREG, TOURAN

Note: Number of ports : 3

330231 - TEMPERATURE SWITCH, RADIATOR FAN

VW
8D0 959 481 B

AUDI
A2, A4, A6, A8, ALLROAD
SKODA
SUPERB
VW
PASSAT

Note: Number of ports : 4

330266 - TEMPERATURE SWITCH, RADIATOR FAN

CITROENPEUGEOT
0242 12

PEUGEOT
504, 505

Note: Number of ports : 2

330267 - TEMPERATURE SWITCH, RADIATOR FAN

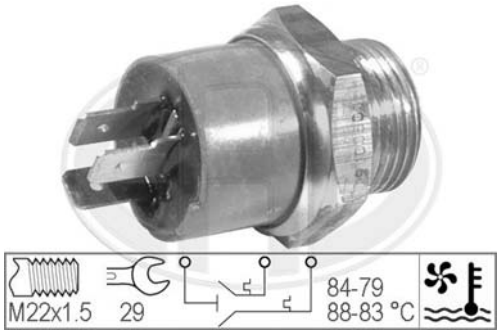

ALFA ROMEO
60533503
CITROENPEUGEOT
1264 06, 1264 16, 95 630 939

ALFA ROMEO
33
CITROËN
BX, C15
PEUGEOT
205, 305, 504

Note: Number of ports : 3

330268 - TEMPERATURE SWITCH, RADIATOR FAN

VW
191 959 481 C, 321 959 481 A, 321 959 481 C, 321 959 481 D, 323 959 481 B

AUDI
100, 200, 80, 90
PORSCHE
924, 928
VW
DERBY, PASSAT, POLO, SANTANA

Note: Number of ports : 3

330269 - TEMPERATURE SWITCH, RADIATOR FAN

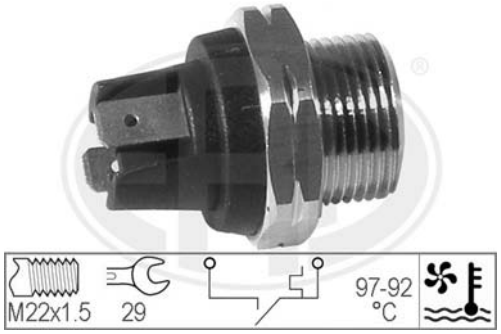

CITROENPEUGEOT
1264 21, 96 015 494
VW
004 433 017, 6U0 959 481 E

CITROËN
AX
PEUGEOT
205, 309, 405
SKODA
FAVORIT, FELICIA
VW
CADDY

Note: Number of ports : 2

330270 - TEMPERATURE SWITCH, RADIATOR FAN

RENAULT
60 01 023 839

RENAULT
SUPER 5

Note: Number of ports : 2

330271 - TEMPERATURE SWITCH, RADIATOR FAN

CITROENPEUGEOT
1264 25, 1264 38, 1264 45, 96 064 750
FIAT
9406475080

CITROËN
AX, BERLINGO, EVASION, SAXO, XSARA, ZX
FIAT
ULYSSE
LANCIA
ZETA
PEUGEOT
106, 205, 306, 309, 405, 406, 806, PARTNER

Note: Number of ports : 3

330272 - TEMPERATURE SWITCH, RADIATOR FAN

CITROENPEUGEOT
1264 36, 1264 44, 95 638 684
FIAT
9563868480

CITROËN
BX, EVASION, JUMPY, XANTIA, XM, XSARA, ZX
FIAT
SCUDO, ULYSSE
LANCIA
ZETA
PEUGEOT
205, 306, 309, 405, 406, 605, 806, EXPERT

Note: Number of ports : 3

330273 - TEMPERATURE SWITCH, RADIATOR FAN

ALFA ROMEO
60585603, 60808223
FIAT
50000969, 5992746, 7748867, 82436410, 82465533, 82477919

ALFA ROMEO
145, 146, 155, 33
FIAT
COUPE, CROMA, DUCATO, DUNA, ELBA, FIORINO, FIORINO Pick up, PALIO, PANDA, REGATA, RITMO, SIENA, STRADA, TALENTO, TEMPRA, TIPO, UNO
INNOCENTI
ELBA
LANCIA
DEDRA, DELTA, PRISMA, THEMA, Y10

Note: Number of ports : 2

330275 - TEMPERATURE SWITCH, RADIATOR FAN

FIAT
60543482, 82430987, 82436409

FIAT
CROMA
LANCIA
DELTA, PRISMA, THEMA

Note: Number of ports : 2

330276 - TEMPERATURE SWITCH, RADIATOR FAN

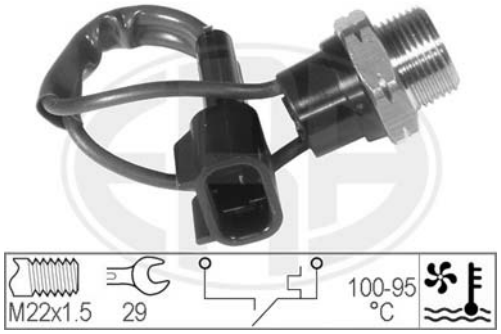

OPEL
13 41 018, 90 340 497

OPEL
KADETT

Note: Number of ports : 2

330277 - TEMPERATURE SWITCH, RADIATOR FAN

OPEL
13 41 011, 13 41 047, 90 242 277, 90 506 496

HOLDEN
BARINA
OPEL
ASTRA, ASTRA F CLASSIC, CALIBRA, COMBO, CORSA, KADETT, OMEGA, SENATOR, TIGRA, VECTRA

Note: Number of ports : 2

330278 - TEMPERATURE SWITCH, RADIATOR FAN

RENAULT
77 00 809 773

RENAULT
19

Note: Number of ports : 4

	Suitable to:	Used on:
330279 - TEMPERATURE SWITCH, RADIATOR FAN 	**ALFA ROMEO** 60809965 **CITROENPEUGEOT** 126434 **FIAT** 46478033, 7642522, 7738581	**CITROËN** JUMPER **FIAT** BRAVA, BRAVO, DUCATO, MAREA, PALIO, PUNTO **PEUGEOT** BOXER

Note: Number of ports : 3

330280 - TEMPERATURE SWITCH, RADIATOR FAN 	**FORD** 7215818, 95VW 8B607 GA **VW** 1H0 959 481 B	**AUDI** A3, TT **FORD** GALAXY **SEAT** ALHAMBRA, AROSA, CORDOBA, IBIZA, INCA, LEON, TOLEDO **SKODA** OCTAVIA **VW** BORA, CADDY, CORRADO, GOLF, JETTA, LUPO, NEW BEETLE, PASSAT, POLO, POLO PLAYA, SHARAN, VENTO

Note: Number of ports : 3

330281 - TEMPERATURE SWITCH, RADIATOR FAN 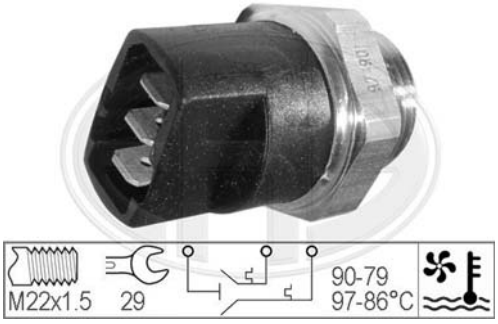 	**VW** 1H0 959 481	**SEAT** CORDOBA, IBIZA, TOLEDO **SKODA** OCTAVIA **VW** PASSAT, VENTO

Note: Number of ports : 3

330282 - TEMPERATURE SWITCH, RADIATOR FAN 	**VW** 867 959 481	**AUDI** A3 **SEAT** AROSA, LEON, TOLEDO **SKODA** OCTAVIA **VW** BORA, GOLF, JETTA, LUPO, PASSAT, POLO, VENTO

Note: Number of ports : 2

330283 - TEMPERATURE SWITCH, RADIATOR FAN

VW
701 959 481

VW
TRANSPORTER

Note: Number of ports : 3

330291 - TEMPERATURE SWITCH, RADIATOR FAN

ALFA ROMEO
60549313, 60564432
FIAT
4114572, 4235333, 4263597, 4318331, 4340878, 55331172, 8122459, 82280950, 82286103
LADA
2103-3808800
SAAB
4086708, 8547572
VW
0004318331, SE 127952.600A

ALFA ROMEO
164, 33
FIAT
127, 128, 131, 132, FIORINO, X 1/9
LADA
SAMARA
SAAB
900, 9000
SEAT
MALAGA
TALBOT
SIMCA 1100, SOLARA
ZASTAVA
101, YUGO

Note: Number of ports : 2

330292 - TEMPERATURE SWITCH, RADIATOR FAN

ALFA ROMEO
60506988
CITROENPEUGEOT
1264 04, 1264 13, 91 513 810 80
RENAULT
77 00 748 169

ALFA ROMEO
164, 6, 75, 90, ALFETTA, GIULIETTA, SPIDER, SZ
PEUGEOT
504, 505, 604
RENAULT
MASTER

Note: Number of ports : 2

330293 - TEMPERATURE SWITCH, RADIATOR FAN

CITROENPEUGEOT
1264 32
FIAT
500349643, 7728057

FIAT
BRAVA, BRAVO, MAREA, PUNTO, TEMPRA, TIPO
IVECO
DAILY II
LANCIA
Y

Note: Number of ports : 2

330294 - TEMPERATURE SWITCH, RADIATOR FAN

FIAT
7558930, 7702713

FIAT
126
FSO
126P
LANCIA
Y10

Note: Number of ports : 3

330295 - TEMPERATURE SWITCH, RADIATOR FAN

ALFA ROMEO
60809247
CITROENPEUGEOT
1264 33
FIAT
7738582

ALFA ROMEO
145, 146, 155
CITROËN
JUMPER
FIAT
BRAVA, BRAVO, DUCATO, MAREA, PUNTO
LANCIA
Y
PEUGEOT
BOXER

Note: Number of ports : 3

330296 - TEMPERATURE SWITCH, RADIATOR FAN

VW
191 959 481, 191 959 481 B, 307 959 481 1, 321 959 481 E

SEAT
CORDOBA, IBIZA, INCA
VW
CADDY, DERBY, GOLF, JETTA, PASSAT, POLO, SANTANA, SCIROCCO, VENTO

Note: Number of ports : 2

330297 - TEMPERATURE SWITCH, RADIATOR FAN

VW
811 959 481, 893 959 481

AUDI
100, 80, 90, A4, A6, A8, CABRIOLET, COUPE
VW
PASSAT

Note: Number of ports : 2

330298 - TEMPERATURE SWITCH, RADIATOR FAN

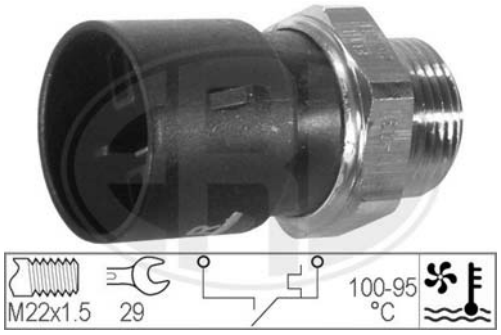

OPEL
13 41 030, 90 449 435

HOLDEN
ASTRA
OPEL
ASTRA, ASTRA F CLASSIC, COMBO, CORSA

Note: Number of ports : 2

330299 - TEMPERATURE SWITCH, RADIATOR FAN

OPEL
13 41 025, 13 41 027, 90 339 408, 90 355 879

OPEL
ASTRA, CORSA

Note: Number of ports : 3

330300 - TEMPERATURE SWITCH, RADIATOR FAN

OPEL
13 41 026, 13 41 039, 90 339 409, 90 355 880

OPEL
ASTRA, CALIBRA, KADETT, OMEGA

Note: Number of ports : 3

330301 - TEMPERATURE SWITCH, RADIATOR FAN

OPEL
13 41 023, 90 339 500

OPEL
CALIBRA, VECTRA

Note: Number of ports : 2

330302 - TEMPERATURE SWITCH, RADIATOR FAN

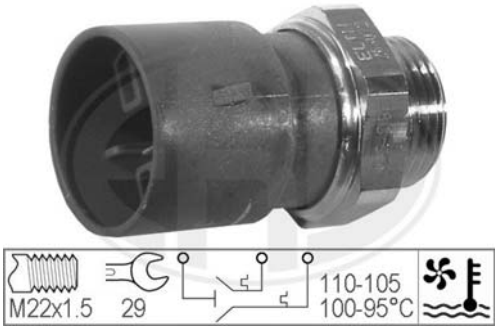

OPEL
13 41 027, 90 355 879

OPEL
CALIBRA, VECTRA

Note: Number of ports : 3

330303 - TEMPERATURE SWITCH, RADIATOR FAN

FORD
6104435
LADA
210838280100

FORD
ESCORT, FIESTA, ORION
OPEL
ASCONA, CORSA, KADETT, OMEGA, SENATOR

Note: Number of ports : 2

330304 - TEMPERATURE SWITCH, RADIATOR FAN

OPEL
13 38 504, 13 41 020, 90 336 709, 90 355 743

OPEL
CORSA, VECTRA

Note: Number of ports : 3

330305 - TEMPERATURE SWITCH, RADIATOR FAN

OPEL
13 41 022, 90 355 936

OPEL
VECTRA

Note: Number of ports : 3

330306 - TEMPERATURE SWITCH, RADIATOR FAN

OPEL
13 41 024, 90 355 937

OPEL
VECTRA

Note: Number of ports : 3

330310 - TEMPERATURE SWITCH, RADIATOR FAN

OPEL
13 41 014, 90 336 458

OPEL
FRONTERA, OMEGA

Note: Number of ports : 2

330534 - TEMPERATURE SWITCH, RADIATOR FAN

VW
021 952 600 B

SEAT
MALAGA, TERRA

Note: Number of ports : 2

330563 - TEMPERATURE SWITCH, RADIATOR FAN

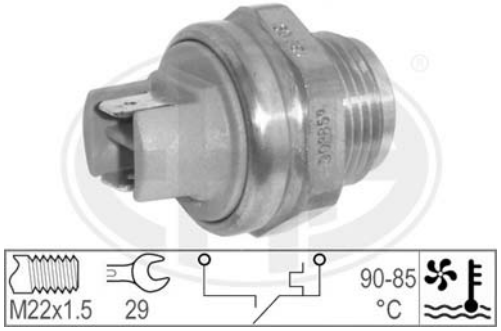

CITROENPEUGEOT
96 029 641
DAEWOO
96 181 814

CITROËN
C15
DAEWOO
NEXIA

Note: Number of ports : 2

330589 - TEMPERATURE SWITCH, RADIATOR FAN

MAZDA
B 62K 18 840A

MAZDA
323 S

Note: Number of ports : 2

330591 - TEMPERATURE SWITCH, RADIATOR FAN

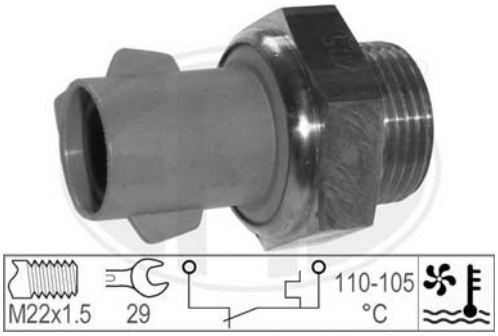

FORD
1090200, 91AB 8B607 BD

FORD
ESCORT, ESCORT CLASSIC, ORION

Note: Number of ports : 2

330599 - TEMPERATURE SWITCH, RADIATOR FAN

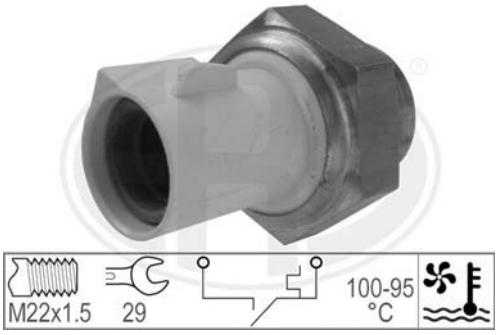

FORD
7001612, 92FB 8B607 AB

FORD
ESCORT, ESCORT CLASSIC, FIESTA

Note: Number of ports : 2

330610 - TEMPERATURE SWITCH, RADIATOR FAN

FORD
7001604, 85GB 8B607 BB

FORD
SCORPIO, SIERRA

Note: Number of ports : 2

330620 - TEMPERATURE SWITCH, RADIATOR FAN

KIA
0K201-18-840, 0K201-18-840A

KIA
SEPHIA, SHUMA

Note: Number of ports : 1

330622 - TEMPERATURE SWITCH, RADIATOR FAN

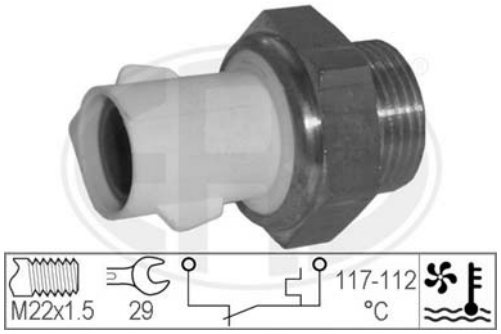

FORD
6489741, 7001609, 91AB 8B607 A2A,
91AB 8B607 AB

FORD
ESCORT, ORION

Note: Number of ports : 2

330631 - TEMPERATURE SWITCH, RADIATOR FAN

VOLVO
34489161, 34512160

VOLVO
440, 460, 480

Note: Number of ports : 3

330633 - TEMPERATURE SWITCH, RADIATOR FAN

HYUNDAI
25360-37100

HYUNDAI
ACCENT, LANTRA

Note: Number of ports : 2

330634 - TEMPERATURE SWITCH, RADIATOR FAN

HYUNDAI
25360-33010

HYUNDAI
LANTRA, SONATA

Note: Number of ports : 2

330667 - TEMPERATURE SWITCH, RADIATOR FAN

HYUNDAI
25360-37250
KIA
25360 37250

HYUNDAI
SONATA
KIA
JOICE
MITSUBISHI
3000 GT, COLT, GALANT, L 400, PAJERO, SPACE GEAR

Note: Number of ports : 2

330668 - TEMPERATURE SWITCH, RADIATOR FAN

HYUNDAI
25360-24000

HYUNDAI
PONY, PONY/EXCEL, S COUPE

Note: Cable Length [mm] : 160,Number of ports : 2

330669 - TEMPERATURE SWITCH, RADIATOR FAN

HYUNDAI
25360-43800

HYUNDAI
H100

Note: Number of ports : 2

330674 - TEMPERATURE SWITCH, RADIATOR FAN

Suitable to:	Used on:
KIA 25360-M2000	**KIA** JOICE

Note: Number of ports : 2

330675 - TEMPERATURE SWITCH, RADIATOR FAN

Suitable to:	Used on:
HYUNDAI 25360-37200	**HYUNDAI** LANTRA

Note: Number of ports : 2

330676 - TEMPERATURE SWITCH, RADIATOR FAN

Suitable to:	Used on:
KIA 25361-M2000	**KIA** JOICE

Note: Number of ports : 2

REVERSE LIGHT SWITCHES

page
627

Reverse Light Switch
Interruttore Luce Retromarcia
Interrupteur, feu-marche arrière
Schalter, Rückfahrleuchte

ERA S.p.A. - April 2012

330232 - SWITCH, REVERSE LIGHT

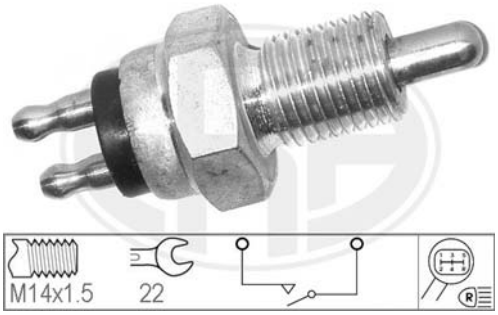

FORD
1610486, 1610487, 1652164, 6005474, 6033136, 71BG 15520 EA, 76BG 15520 AA, 76BG 15520 AB, 76BG 15520 AIB

FORD
CAPRI, ESCORT, ORION, P 100, SIERRA, TAUNUS, TRANSIT

Note: Number of ports : 2

330233 - SWITCH, REVERSE LIGHT

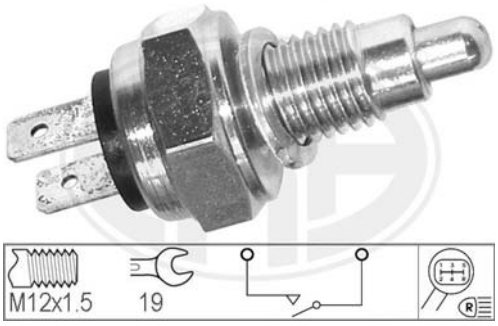

ROVER
BAU 2445
VW
020 941 521 A, 085 941 521

AUSTIN
MONTEGO
ROVER
MAESTRO, MONTEGO
SEAT
TERRA
VW
CADDY, GOLF, JETTA, POLO, SCIROCCO

Note: Number of ports : 2

330234 - SWITCH, REVERSE LIGHT

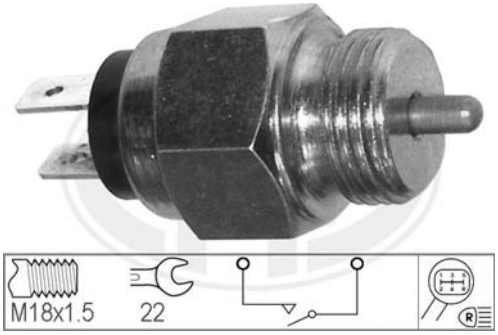

VW
014 919 361, 084 941 521, 251 941 521

AUDI
100, 200, 80, 90, V8
PORSCHE
924
VW
DERBY, GOLF, JETTA, PASSAT, POLO, SANTANA, SCIROCCO

Note: Number of ports : 2

330235 - SWITCH, REVERSE LIGHT

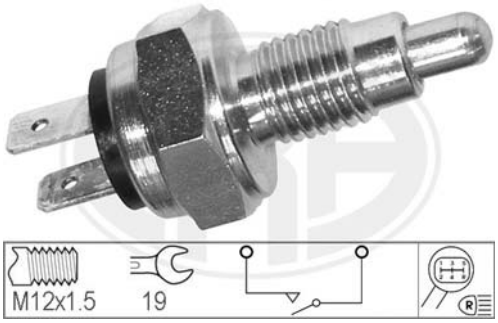

OPEL
12 39 260, 90 069 100

OPEL
ASCONA, CORSA, KADETT

Note: Number of ports : 2

330236 - SWITCH, REVERSE LIGHT

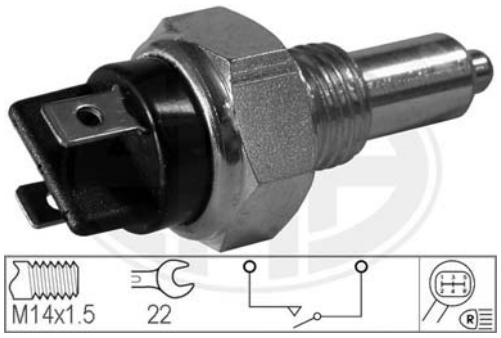

CITROENPEUGEOT
2257 17, 91 514 017, 91 514 733
FIAT
91514733
RENAULT
77 00 732 506, 77 01 348 716

CITROËN
AX, BX, C15, VISA
FIAT
DUCATO, TALENTO
PEUGEOT
104, 205, 305, 309, 405
RENAULT
11, 14, 21, 9, RAPID, SUPER 5
TALBOT
SAMBA

Note: Number of ports : 2

330237 - SWITCH, REVERSE LIGHT

RENAULT
77 00 517 549, 77 01 348 699

ALPINE
V6
OPEL
ARENA
RENAULT
20, 21, 5, ESPACE, MASTER, TRAFIC
TALBOT
TAGORA

Note: Number of ports : 2

330238 - SWITCH, REVERSE LIGHT

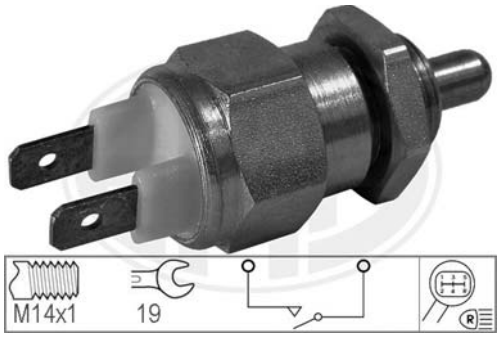

VW
115 939 031, 312 939 030

SKODA
105,120, FAVORIT, FELICIA

Note: Number of ports : 2

330239 - SWITCH, REVERSE LIGHT

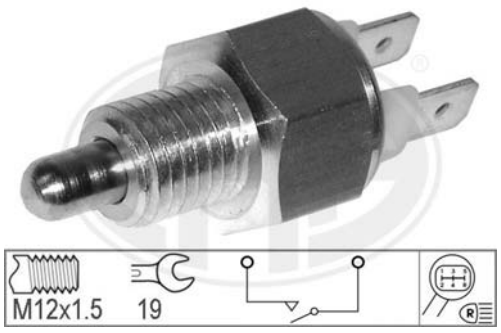

BMW
23 14 1 352 153, 23 14 1 354 071, 61 31 1 352 153
SAAB
9509480

BMW
3, 5, 6, 7, Z1
SAAB
90, 900

Note:

330240 - SWITCH, REVERSE LIGHT

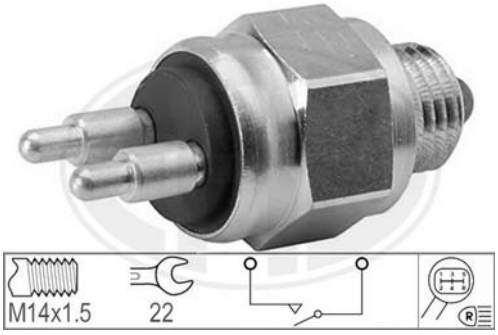

VOLVO
1307086, 1307086-7, 9442728

MITSUBISHI
CARISMA, SPACE STAR
VOLVO
240, 260, 740, 760, 780, 850, 940, 960, C70, S40, S70, S90, V40, V70, V90

Note: Number of ports : 2

330241 - SWITCH, REVERSE LIGHT

FIAT
5997492, 7580599, 91118618

FIAT
CINQUECENTO, DUNA, ELBA, FIORINO, FIORINO Pick up, PANDA, REGATA, RITMO, SEICENTO, UNO
INNOCENTI
ELBA
LANCIA
DELTA, PRISMA, Y10

Note: Number of ports : 2

330243 - SWITCH, REVERSE LIGHT

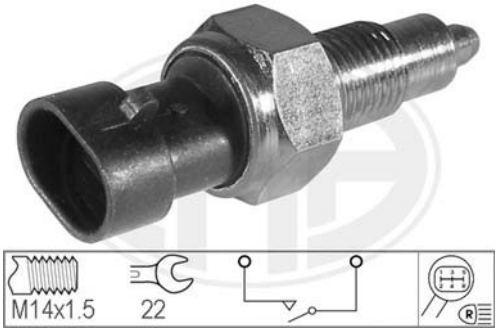

ALFA ROMEO
60811423
FIAT
46410523

ALFA ROMEO
145, 146, 147, 155, 156, GT, GTV, SPIDER
FIAT
500, BARCHETTA, BRAVA, BRAVO, COUPE, DOBLO, ELBA, FIORINO, FIORINO Pick up, IDEA, LINEA, MAREA, MULTIPLA, PALIO, PUNTO, GRANDE PUNTO, REGATA, SIENA, STILO, STRADA, TEMPRA, TIPO, UNO
INNOCENTI
ELBA
LANCIA
DEDRA, DELTA, LYBRA, MUSA, PRISMA, YPSILON

Note: Number of ports : 2

330244 - SWITCH, REVERSE LIGHT

DAEWOO
90 245 033, 96 192 077
FIAT
71719525, 71739582, 71745445
OPEL
12 39 266, 12 39 271, 90 245 033, 90 482 454
ROVER
UMB 100090
SAAB
4232666, 4617668

ALFA ROMEO
156, 166
CHEVROLET
AVEO, EPICA, EVANDA, KALOS, LACETTI, NUBIRA, REZZO
DAEWOO
ESPERO, EVANDA, KALOS, LACETTI, LANOS, LEGANZA, NEXIA, NUBIRA, REZZO
FIAT
IDEA, PUNTO, STILO
HOLDEN
ASTRA
LANCIA
MUSA, THESIS
MG
MG ZT, MG ZT-T
MINI
MINI
OPEL
AGILA, ASTRA, ASTRA F CLASSIC, CALIBRA, COMBO, CORSA, KADETT, MERIVA, SINTRA, TIGRA, VECTRA, ZAFIRA
PORSCHE
911
ROVER
75
SAAB
9-3, 9-5, 900, 9000
SUZUKI
IGNIS, SWIFT, WAGON R+

Note: Number of ports : 2

330246 - SWITCH, REVERSE LIGHT

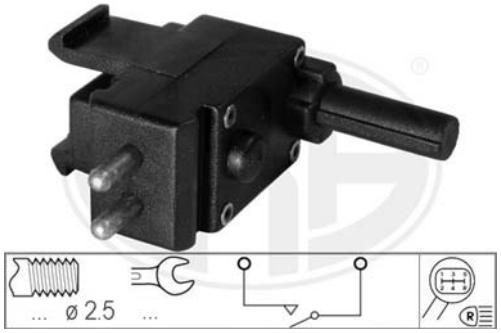

MERCEDES-BENZ
140 545 04 14, 201 545 00 14

MERCEDES-BENZ
190, CABRIOLET, COUPE, E-CLASS, G-CLASS, KOMBI, S-CLASS, SL
PUCH
G-MODELL

Note: Number of ports : 2

330247 - SWITCH, REVERSE LIGHT

HYUNDAI
93860-36100
MITSUBISHI
MD730979
VOLVO
30874168

HYUNDAI
ACCENT, COUPE, LANTRA, PONY, PONY/EXCEL, S COUPE, SANTAMO, SONATA
MITSUBISHI
3000 GT, CARISMA, COLT, ECLIPSE, GALANT, GRANDIS, L 200, LANCER, OUTLANDER, SPACE RUNNER, SPACE STAR, SPACE WAGON
VOLVO
S40, V40

Note: Number of ports : 2

330248 - SWITCH, REVERSE LIGHT

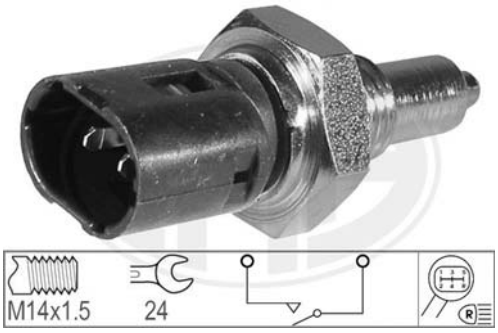

MITSUBISHI
M474114, MW30899625
NISSAN
32005-00QAA
OPEL
44 10 080, 44 14 385
RENAULT
77 00 422 630, 77 00 778 780, 77 00 802 640
VOLVO
30899625, 3474114-0

MITSUBISHI
CARISMA, SPACE STAR
NISSAN
INTERSTAR, KUBISTAR, PRIMASTAR
OPEL
MOVANO, VIVARO
RENAULT
19, 21, AVANTIME, CLIO, ESPACE, KANGOO, LAGUNA, MASTER, MEGANE, MODUS, RAPID, SAFRANE, SCENIC, SUPER 5, TRAFIC II, TWINGO
VOLVO
440, 460, 480, S40, V40

Note: Number of ports : 2

330249 - SWITCH, REVERSE LIGHT

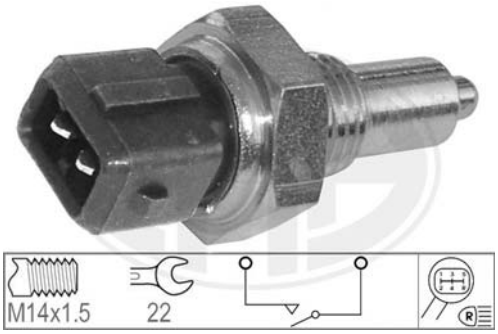

CITROENPEUGEOT
2257 34, 2257 40, 96 018 110
FIAT
9601811080, 9609352480
NISSAN
32005-6F900
ROVER
UMB10001, UMB100050
VW
01E 941 521

AUDI
100, 80, A4, A6, A8, ALLROAD, CABRIOLET, V8
CITROËN
AX, BERLINGO, BX, C15, EVASION, JUMPER, JUMPY, SAXO, XANTIA, XM, XSARA, ZX
FIAT
DUCATO, SCUDO, ULYSSE
LANCIA
ZETA
LAND ROVER
RANGE ROVER
MINI MINI
NISSAN MICRA
PEUGEOT
106, 205, 206, 306, 309, 405, 406, 605, 806, BOXER, EXPERT, PARTNER
PORSCHE 968
ROVER
100, 100 (METRO), 200, 25, 400, 45, CABRIOLET, COUPE
VW PASSAT

Note: Number of ports : 2

330250 - SWITCH, REVERSE LIGHT

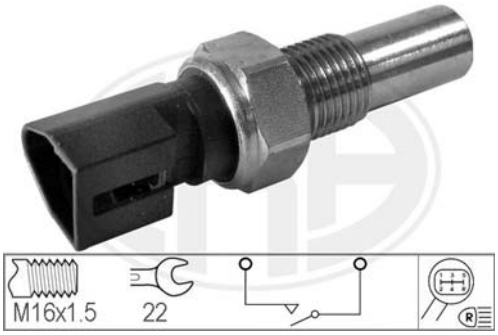

FORD
1654978, 6199395, 6871978, 86FG 15520 AA, 89FG 15520 AB, 92FG 15520 A2A

FORD
ESCORT, FIESTA, ORION

Note: Number of ports : 2

330251 - SWITCH, REVERSE LIGHT

CITROENPEUGEOT
2257 33, 2257 41, 96 018 108
FIAT
9601810880

CITROËN
BERLINGO, BX, C15, EVASION, JUMPY, XANTIA, XM, XSARA, ZX
FIAT
SCUDO, ULYSSE
PEUGEOT
205, 206, 306, 309, 405, 406, 605, 806, EXPERT, PARTNER

Note: Number of ports : 2

330252 - SWITCH, REVERSE LIGHT

OPEL
12 39 267, 90337100

OPEL
OMEGA, SENATOR

Note: Number of ports : 2

330253 - SWITCH, REVERSE LIGHT

RENAULT
77 00 778 781

RENAULT
21, 25, ESPACE, TRAFIC

Note: Number of ports : 2

330254 - SWITCH, REVERSE LIGHT

NISSAN
32005-51A00, 32005-51A10, 32005-51A20, 32006-D1206

NISSAN
ALMERA, BLUEBIRD, MICRA, PRIMERA, SUNNY, TERRANO

Note: Number of ports : 2

330255 - SWITCH, REVERSE LIGHT

VW
084 945 415

SEAT
CORDOBA, IBIZA, INCA, TOLEDO
VW
CADDY, GOLF, POLO, POLO PLAYA, VENTO

Note: Number of ports : 2

330256 - SWITCH, REVERSE LIGHT

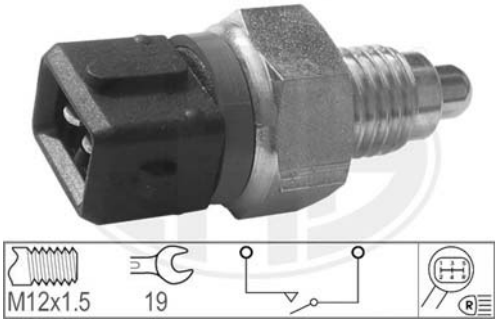

BMW
23 14 1 221 706, 23 14 1 434 584, 23 14 7 506 637

BMW
1, 3, 5, 6, 7, 8, X3, X5, Z3, Z4, Z8
MINI
MINI

Note: Number of ports : 2

330257 - SWITCH, REVERSE LIGHT

NISSAN
32005-70E00, 32005-70E10, 32005-70E12, 32005-70E20

INFINITI
G20
NISSAN
100 NX, ALMERA, PRIMERA, SUNNY

Note:

330258 - SWITCH, REVERSE LIGHT

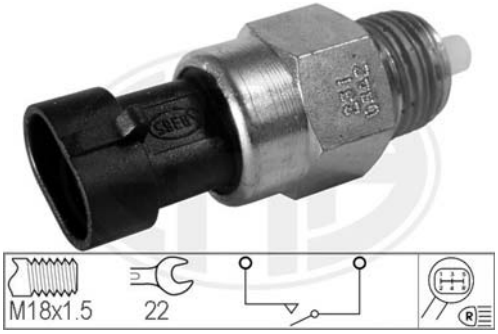

FIAT
46410524, 55189236, 55203408, 7686344

ALFA ROMEO
145, 146
FIAT
500, BRAVA, BRAVO, CINQUECENTO, DOBLO, FIORINO, IDEA, LINEA, MAREA, PALIO, PANDA, PUNTO, GRANDE PUNTO, SEICENTO, SIENA, STILO, UNO
LANCIA
MUSA, Y, Y10, YPSILON

Note: Number of ports : 2

330259 - SWITCH, REVERSE LIGHT

FORD
6178267, 88VB 15520 AA
ISUZU
8-97028-167-0

FORD
TRANSIT, TRANSIT TOURNEO

Note: Number of ports : 2

330260 - SWITCH, REVERSE LIGHT

ALFA ROMEO
60814251
FIAT
46434553

ALFA ROMEO
145, 146, 147, 156, 166, GT, GTV, SPIDER
FIAT
BRAVO, COUPE, MAREA, STILO
LANCIA
KAPPA, LYBRA, THESIS

Note: Number of ports : 2

330261 - SWITCH, REVERSE LIGHT

VW
02K 945 415

AUDI
A3
SKODA
OCTAVIA
VW
GOLF

Note: Number of ports : 2

330262 - SWITCH, REVERSE LIGHT

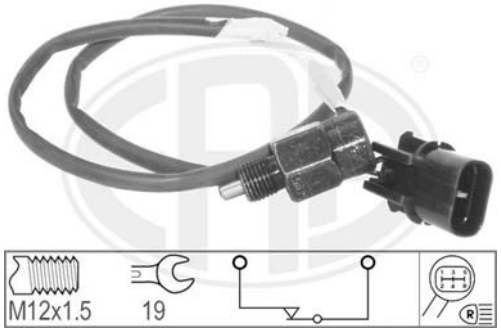

HYUNDAI
93860-02001, 93860-02002

HYUNDAI
ATOS, ATOS PRIME

Note: Number of ports : 2

330263 - SWITCH, REVERSE LIGHT

FORD
1029819, 1112601, 1137034, 1383960,
97FG 15520 AA, 97FG 15520 AB,
97FG 15520 AC, 97FG 15520 AD
MAZDA
1 E04 17 640, 1 E05 17 640
ROVER
UMB 000020

FORD
ESCORT, ESCORT CLASSIC, FIESTA, FOCUS,
FOCUS C-MAX, FUSION, KA, PUMA, STREET KA
MAZDA
121, 2
MG
MG ZR
ROVER
200, 25, 400, 45
VOLVO
C30, S40, V50

Note: Number of ports : 2

330264 - SWITCH, REVERSE LIGHT

VW
02K 945 415 C, 02K 945 415 D, 02K 945 415 E

AUDI
A2, A3, TT
SEAT
ALHAMBRA, ALTEA, ALTEA XL, AROSA, CORDOBA, IBIZA, LEON, TOLEDO
SKODA
FABIA, OCTAVIA, ROOMSTER, ROOMSTER Praktik, SUPERB
VW
BORA, CADDY, EOS, GOLF, JETTA, LUPO, MULTIVAN, NEW BEETLE, PASSAT, PASSAT CC, POLO, SCIROCCO, SHARAN, SPACEFOX, TOURAN, TRANSPORTER

Note: Number of ports : 2

330265 - SWITCH, REVERSE LIGHT

VW
002 945 415

SEAT
AROSA
SKODA
FABIA, FELICIA, OCTAVIA
VW
LUPO

Note: Number of ports : 2

330335 - SWITCH, REVERSE LIGHT

FIAT
3916074, 3916083, 3919769, 4415441, 4425340, 4443505, 82366629
SEAT
3934555, 3934556, 4415441, 4418599, 4443505, HB-952500.00, HB-952500.01, HB-952500.02, RF-952000.00, RF-952000.01
ZASTAVA
46635308

FIAT
REGATA, RITMO
LANCIA
DELTA, PRISMA
SEAT
FURA

Note: Number of ports : 2

330338 - SWITCH, REVERSE LIGHT

FIAT
4209632, 4356373, 5975552, 5977316, 5994949
ZASTAVA
4209632

FIAT
127, 128, FIORINO, UNO, X 1/9
LANCIA
A 112

Note: Number of ports : 2

330339 - SWITCH, REVERSE LIGHT

ALFA ROMEO
60800340
FIAT
7565135, 7615563

ALFA ROMEO
164
FIAT
CROMA
LANCIA
DEDRA, DELTA, PRISMA, THEMA

Note: Number of ports : 2

330343 - SWITCH, REVERSE LIGHT

ALFA ROMEO
60808331, 60812316
FIAT
46421540, 7711531

ALFA ROMEO
155, 164, GTV
FIAT
COUPE, CROMA, TEMPRA
LANCIA
DEDRA, DELTA, KAPPA, THEMA

Note: Number of ports : 2

330347 - SWITCH, REVERSE LIGHT

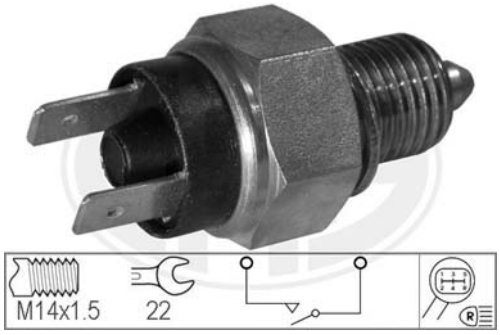

ALFA ROMEO
60501196
FIAT
4143258, 4998897, 7056776

ALFA ROMEO
145, 146, 33, 6, 75, 90, ALFASUD, ALFETTA, GIULIETTA, SPIDER, SZ
LANCIA
A 112

Note: Number of ports : 2

330439 - SWITCH, REVERSE LIGHT

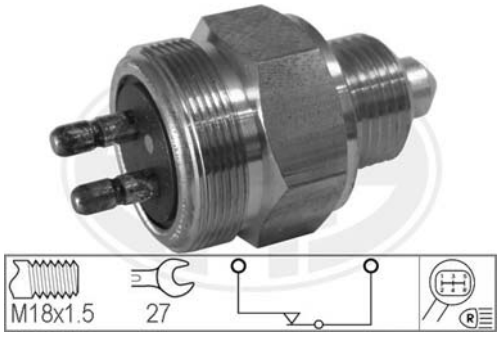

MAN
81 25507 0015

MAN
STEYR

Note: Number of ports : 2

330441 - SWITCH, REVERSE LIGHT

FORD
6031219, 77FG 15520 AA

FORD
ESCORT, FIESTA, ORION

Note: Number of ports : 2

330442 - SWITCH, REVERSE LIGHT

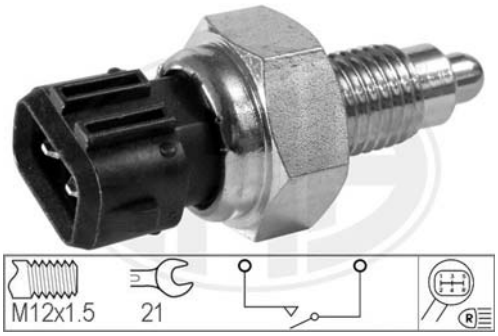

ROVER
UMB 1003
VW
005 566 119, 020 945 415 A

ROVER
MAESTRO
SEAT
AROSA, CORDOBA, IBIZA, INCA, TOLEDO
SKODA
FELICIA
VW
CADDY, GOLF, JETTA, LUPO, POLO, POLO PLAYA, SCIROCCO, TRANSPORTER, VENTO

Note: Number of ports : 2

330443 - SWITCH, REVERSE LIGHT

IVECO
93192483

IVECO
Bus, AP160, 370SE27, Eurorider 26, 29

Note: Number of ports : 2

330444 - SWITCH, REVERSE LIGHT

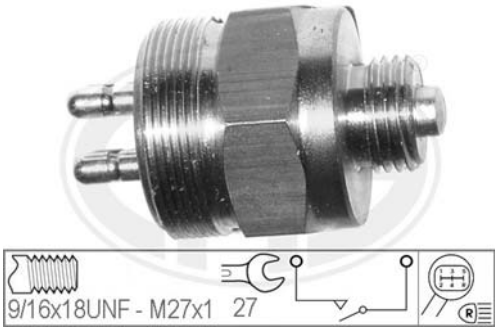

IVECO
42047142
MAN
81 25505 0461

IVECO
P/PA-Haubenfahrzeuge

Note: Number of ports : 2

330445 - SWITCH, REVERSE LIGHT

SCANIA
304836

SCANIA

Note: Number of ports : 2

330446 - SWITCH, REVERSE LIGHT

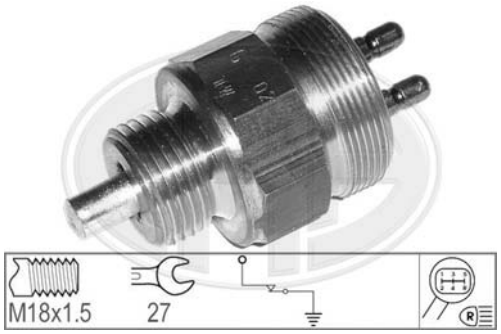

IVECO
93190310
MAN
81 25505 0636, 81 25520 0050
MERCEDES-BENZ
000 545 42 14
SCANIA
1303471, 343795, 370710

IVECO
EuroStar

Note: Number of ports : 2

330447 - SWITCH, REVERSE LIGHT

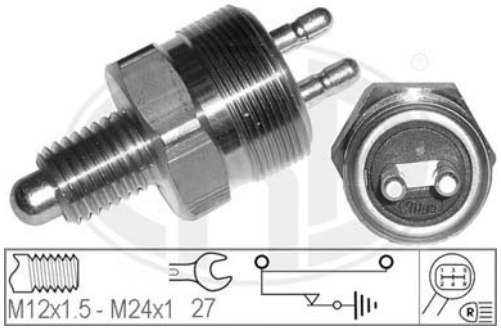

SCANIA
314572

SCANIA
3 - series

Note: Number of ports : 2

330448 - SWITCH, REVERSE LIGHT

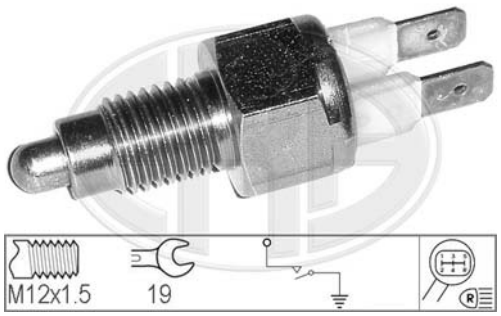

VW
084 941 521 A

AUSTIN
MAESTRO, MONTEGO
SEAT
TERRA
VW
CADDY, GOLF, JETTA, POLO, SCIROCCO

Note: Number of ports : 2

330453 - SWITCH, REVERSE LIGHT

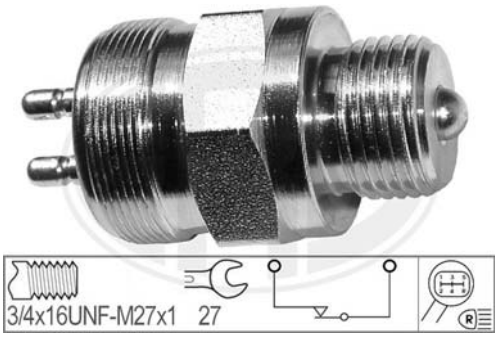

DAF
362606
IVECO
42047167
MAN
81 25520 0078

DAF
IVECO
Eurocargo, Eurostar, Eurotech
MAN

Note: Number of ports : 2

330454 - SWITCH, REVERSE LIGHT

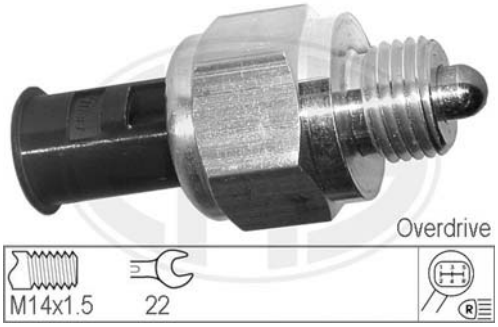

VOLVO
1324496

VOLVO
240, 260, 740, 760, 940

Note:

330455 - SWITCH, REVERSE LIGHT

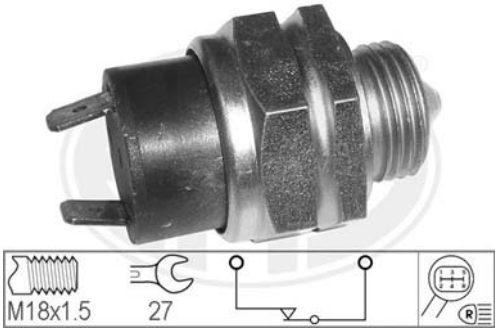

KHD
IVECO
MAGIRUS DEUTZ

Note: Number of ports : 2

330456 - SWITCH, REVERSE LIGHT

MERCEDES-BENZ
003 545 45 14

MERCEDES

Note: Number of ports : 2

330459 - SWITCH, REVERSE LIGHT

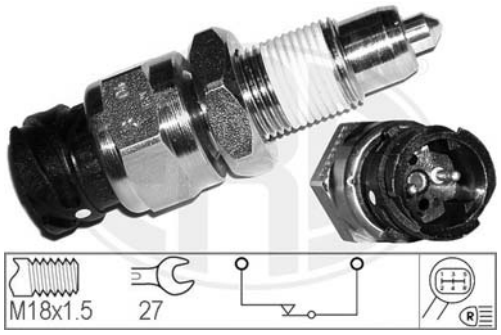

VOLVO
3197873

VOLVO
FH, NH series

Note: Number of ports : 2

330460 - SWITCH, REVERSE LIGHT

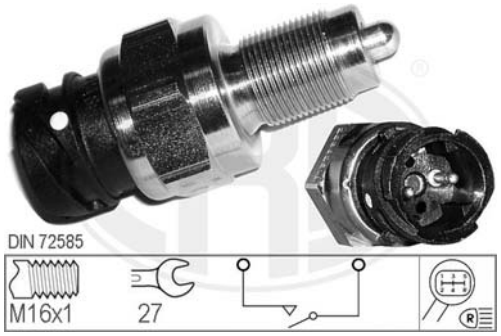

VOLVO
3181941

VOLVO
FH, NH series

Note: Number of ports : 2

330461 - SWITCH, REVERSE LIGHT

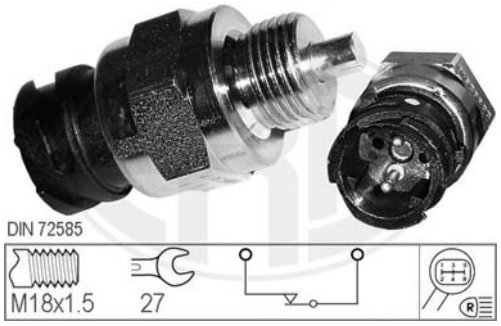

SCANIA
1472739

SCANIA
4-series

Note: Number of ports : 2

330463 - SWITCH, REVERSE LIGHT

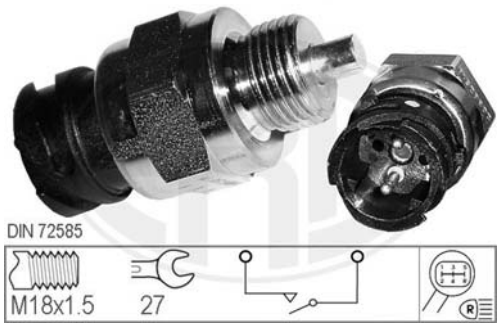

VOLVO
1078493

VOLVO
FH, NH series

Note: Number of ports : 2

330464 - SWITCH, REVERSE LIGHT

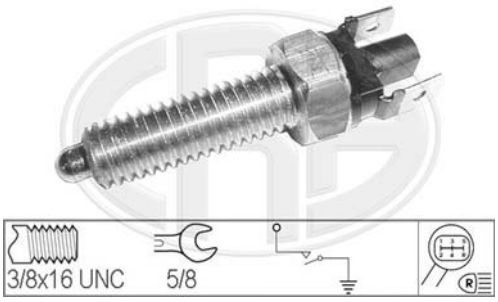

LAND ROVER
PRC 2911

LAND ROVER
DEFENDER, DISCOVERY, RANGE ROVER

Note: Number of ports : 2

330467 - SWITCH, REVERSE LIGHT

VOLVO
31 97 870

VOLVO
FH, NH series

Note: Number of ports : 2

330474 - SWITCH, REVERSE LIGHT

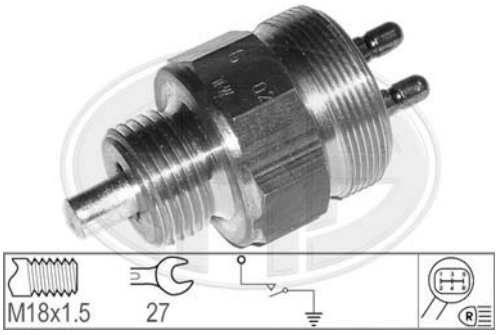

LIEBHERR
6060084
MAN
81 25505 0808

MAN
LIEBHERR

Note: Number of ports : 2

330475 - SWITCH, REVERSE LIGHT

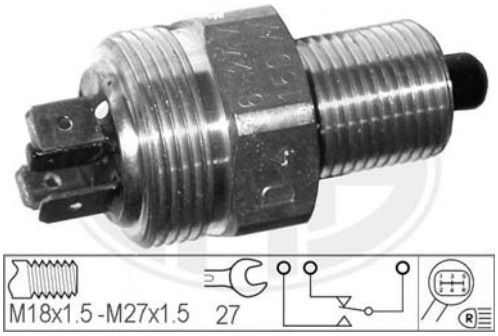

IVECO
4191001

IVECO
MAGIRUS DEUTZ

Note: Number of ports : 3

330489 - SWITCH, REVERSE LIGHT

SCANIA
1472738

SCANIA
4-series

Note: Number of ports : 2

330501 - SWITCH, REVERSE LIGHT

IVECO
4846676

IVECO
DAILY I

Note: Number of ports : 2

330504 - SWITCH, REVERSE LIGHT

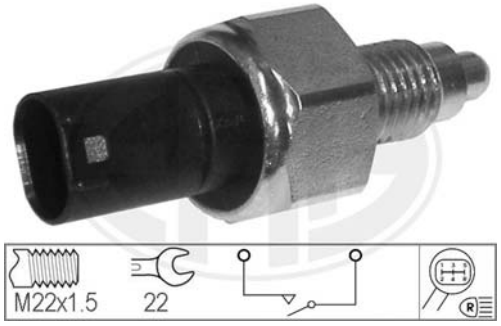

MERCEDES-BENZ
168 545 00 14

MERCEDES-BENZ
A-CLASS, B-CLASS

Note: Number of ports : 2

330508 - SWITCH, REVERSE LIGHT

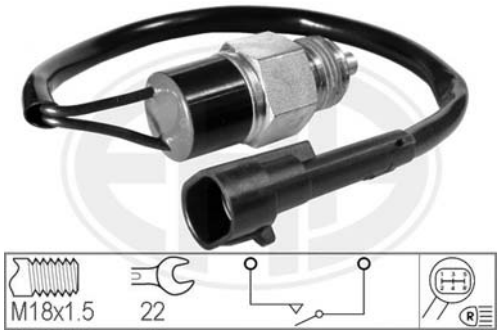

FIAT
46817710, 55189238

FIAT
STILO

Note: Number of ports : 2

330511 - SWITCH, REVERSE LIGHT

VW
002 945 415 D

SKODA
FABIA
VW
LUPO

Note: Number of ports : 2

330513 - SWITCH, REVERSE LIGHT

CITROENPEUGEOT
2257 42, 2257 53
FIAT
9633875680, 9659870380, 9662906780
NISSAN
32005-6F901

CITROËN
BERLINGO, C2, C3, C4, C5, C6, C8, EVASION, JUMPER, JUMPY, NEMO, SAXO, XANTIA, XM, XSARA
FIAT
DUCATO, SCUDO, ULYSSE
LANCIA
PHEDRA, ZETA
NISSAN
MICRA
PEUGEOT
1007, 106, 206, 207, 207 CC, 207 SW, 306, 307, 308, 308 SW, 406, 407, 607, 806, 807, BIPPER, BOXER, EXPERT, EXPERT Tepee, PARTNER

Note: Number of ports : 2

330515 - SWITCH, REVERSE LIGHT

FIAT
46423232

FIAT
BRAVA, BRAVO, MAREA, PALIO, PUNTO, SIENA, STRADA
LANCIA
LYBRA, Y

Note: Number of ports : 2

330516 - SWITCH, REVERSE LIGHT

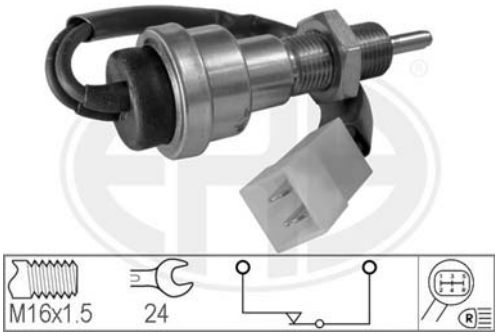

IVECO
4181980, 4700385

IVECO
110NC, 130NC, 160NC, 170NC, 180NC, 300PC, 306 BUS, 308 BUS, 314 BUS, 331 BUS, 410 BUS, 416 BUS, 418 BUS, 421 BUS, 616N3, 616N4, 619N1, 650N, 650N1, 662, 682N3, 682N4, 682T3, 682T4, 684N, 691, 697

Note: Number of ports : 2

330518 - SWITCH, REVERSE LIGHT

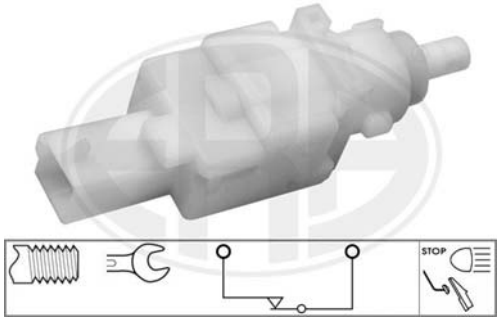

CITROENPEUGEOT
4534 39, 4534 45, 4534 49
FIAT
46742974, 51713873

ALFA ROMEO
147, 156, GT
CITROËN
JUMPER
FIAT
DOBLO, DUCATO, PANDA, PUNTO
LANCIA
LYBRA, YPSILON
PEUGEOT
BOXER

Note: Number of ports : 2

330522 - SWITCH, REVERSE LIGHT

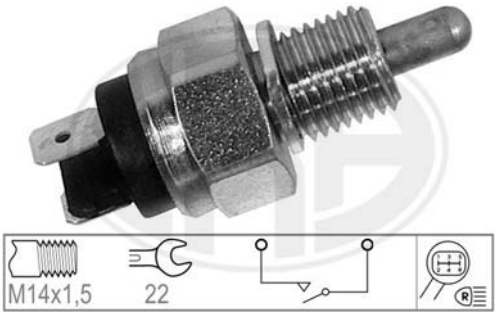

IVECO
4173783

IVECO
DAILY I

Note: Number of ports : 2

330525 - SWITCH, REVERSE LIGHT

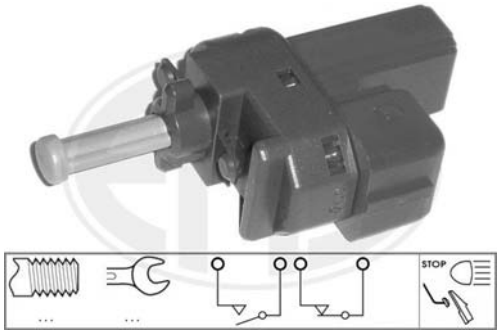

FORD
1066391, 98AB 7C534 BA

FORD
FOCUS, TRANSIT CONNECT

Note: Number of ports : 4

330526 - SWITCH, REVERSE LIGHT

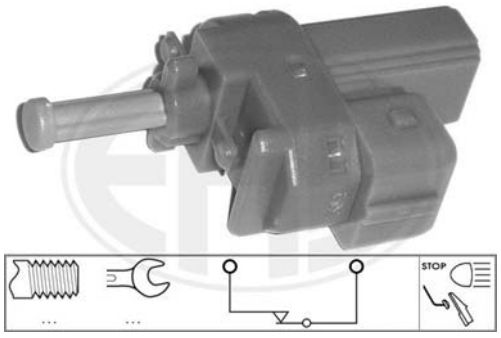

FORD
1066389, 98AB 7C534 AA

FORD
FOCUS

Note: Number of ports : 2

330532 - SWITCH, REVERSE LIGHT

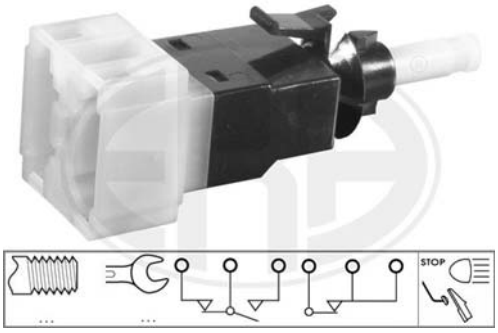

MERCEDES-BENZ
001 545 31 09, 001 545 64 09

MERCEDES-BENZ
C-CLASS, CLK, E-CLASS, G-CLASS, M-CLASS, S-CLASS, SL, SLK, SPRINTER, SPRINTER 2-t, SPRINTER 3-t, VIANO, VITO, VITO / MIXTO
PUCH
G-MODELL

Note: Number of ports : 6

330533 - SWITCH, REVERSE LIGHT

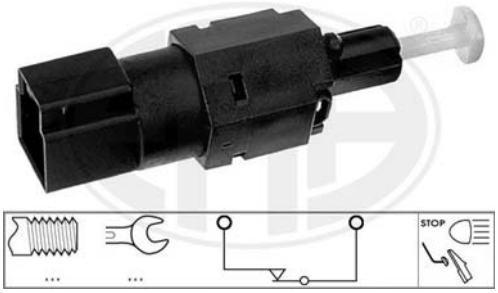

NISSAN
25320-70J00

NISSAN
MICRA, PRIMERA

Note: Number of ports : 2

330543 - SWITCH, REVERSE LIGHT

NISSAN
32005-00QAD, 32005-00QAE, 32005-00QAEKT, 32005-AX000
OPEL
44 30 825, 93 161 462
RENAULT
82 00 008 194, 82 00 177 718

DACIA
LOGAN, LOGAN MCV, SANDERO
NISSAN
ALMERA, MICRA, MICRA C+C, NOTE, QASHQAI, TIIDA, X-TRAIL
OPEL
VIVARO
RENAULT
AVANTIME, CLIO, ESPACE, GRAND SCENIC, LAGUNA, LOGAN, MASTER, MEGANE, MODUS, SCENIC, TRAFIC II, TWINGO, VEL SATIS

Note: Number of ports : 3

330544 - SWITCH, REVERSE LIGHT

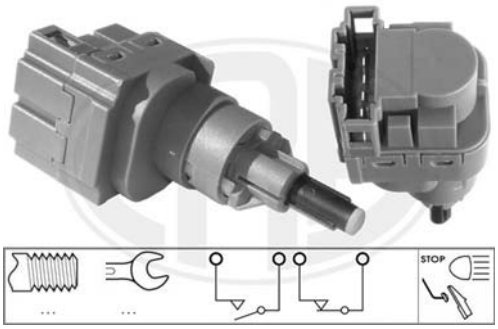

VW
1C0 945 511 A

AUDI
A3, TT
FORD
GALAXY
SEAT
ALHAMBRA, CORDOBA, INCA
SKODA
OCTAVIA
VW
BORA, CADDY, GOLF, MULTIVAN, NEW BEETLE, SHARAN, TRANSPORTER

Note: Number of ports : 4

330569 - SWITCH, REVERSE LIGHT

HYUNDAI
93860-39003
KIA
93860 39003

HYUNDAI
ACCENT, COUPE, ELANTRA, GETZ, MATRIX, SONATA, TRAJET, TUCSON, XG
KIA
CARENS, CARENS III, CERATO, JOICE, MAGENTIS, SPORTAGE

Note: Number of ports : 2

330570 - SWITCH, REVERSE LIGHT

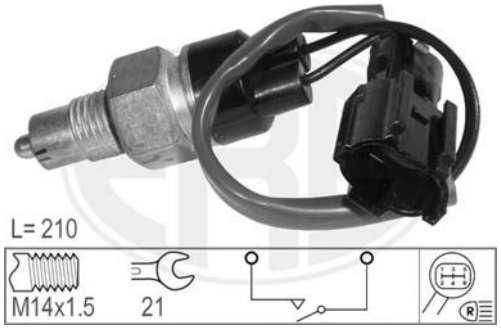

CHEVROLET
96 314 357
DAEWOO
96 314 357

CHEVROLET
MATIZ
DAEWOO
MATIZ

Note: Number of ports : 2

330571 - SWITCH, REVERSE LIGHT

CHEVROLET
96 610 001
DAEWOO
96 610 001

CHEVROLET
AVEO, MATIZ
DAEWOO
KALOS, MATIZ

Note: Cable Length [mm] : 210,Number of ports : 2

330579 - SWITCH, REVERSE LIGHT

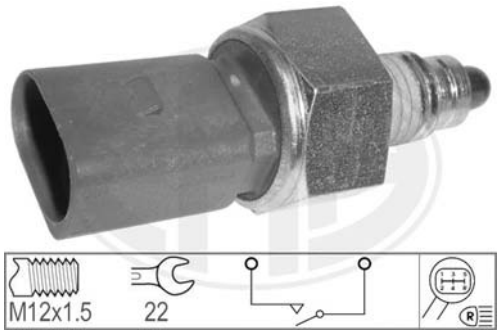

FORD
1119746, 1213 353, 1438727, 1439597, 1514133, 1M21 15520 AA, 6M21 15520 AA
VW
02T 945 415, 02T 945 415 D, 02T 945 415 E, 02T 945 415 K, 02T 945 415 L, 02T 945 415 P, 02T 945 415 Q

AUDI
A1, A2, A3, TT
FORD
GALAXY
SEAT
ALHAMBRA, ALTEA, ALTEA XL, CORDOBA, IBIZA, LEON, TOLEDO
SKODA
FABIA, OCTAVIA, ROOMSTER, ROOMSTER Praktik, SUPERB, YETI
VW
BORA, CADDY, EOS, FOX, GOLF, JETTA, LUPO, MULTIVAN, NEW BEETLE, PASSAT, PASSAT CC, POLO, SCIROCCO, SHARAN, SPACEFOX, TIGUAN, TOURAN, TRANSPORTER

Note: Number of ports : 2

330580 - SWITCH, REVERSE LIGHT

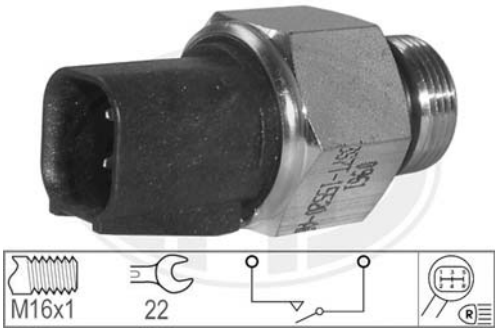

FORD
1227274, 1444282, 3S7T 15520 AA, 3S7T 15520 AB
JAGUAR
C2S 44687, C2S 45412
VOLVO
30774466

JAGUAR
X-TYPE
VOLVO
C30, S40, V50, V70

Note: Number of ports : 2

330590 - SWITCH, REVERSE LIGHT

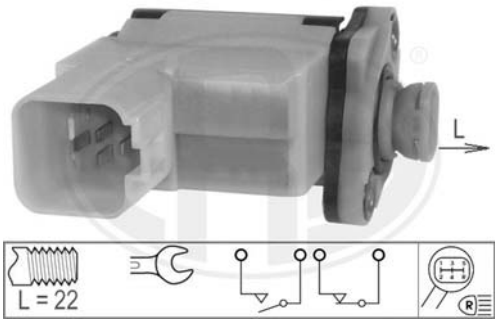

FORD
1021795, 96WT 15520 BB

FORD
ESCORT, ESCORT CLASSIC, FIESTA

Note: Number of ports : 4

330592 - SWITCH, REVERSE LIGHT

FORD
1435339, 6S6T 15520 AA

FORD
FIESTA, FUSION

Note: Number of ports : 2

330593 - SWITCH, REVERSE LIGHT

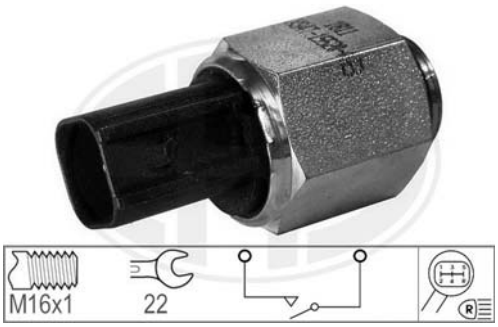

FORD
1441361, XS4T 15520 AB

FORD
C-MAX, FOCUS, TRANSIT CONNECT

Note: Number of ports : 2

330594 - SWITCH, REVERSE LIGHT

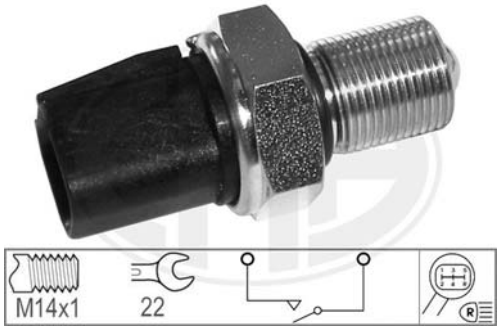

FORD
1461586, 4526441, 4C1T 15520 AA, 4C1T 15520 AB

FORD
TRANSIT, TRANSIT TOURNEO

Note: Number of ports : 2

330601 - SWITCH, REVERSE LIGHT

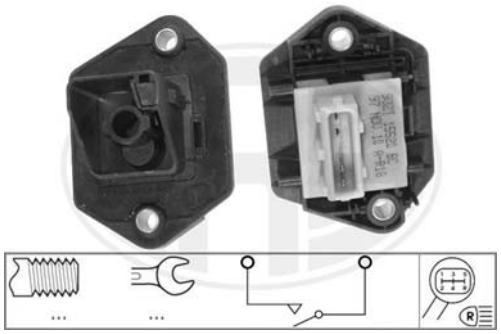

FORD
1020872, 93ZT 15520 BC

FORD
ESCORT, MONDEO

Note: Number of ports : 2

330602 - SWITCH, REVERSE LIGHT

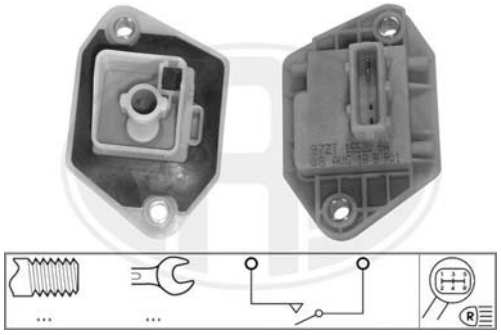

FORD
1030909, 97ZT 15520 BA

FORD
COUGAR, FOCUS, MONDEO

Note: Number of ports : 2

330603 - SWITCH, REVERSE LIGHT

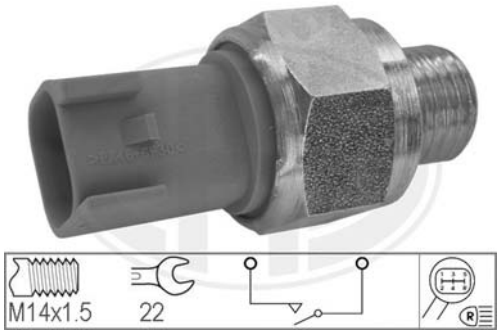

FORD
1381509, 666R 15520 AA
VOLVO
30729812

FORD
FOCUS, FOCUS C-MAX, GALAXY, MONDEO, S-MAX
VOLVO
C30, C70, S40, S60, S80, V50, V70, XC 90, XC70, XC70 CROSS COUNTRY

Note: Number of ports : 2

330604 - SWITCH, REVERSE LIGHT

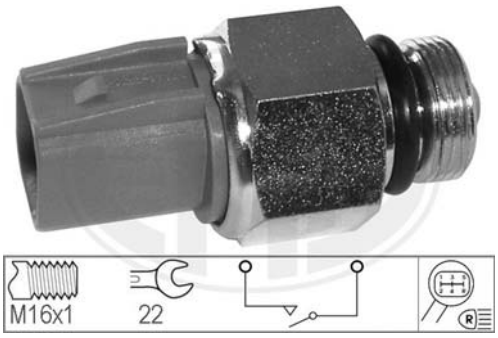

FORD
1406051, 6M2T 15520 BA
JAGUAR
C2S 44687, C2S 45412
VOLVO
30774466

FORD
MONDEO, S-MAX

Note: Number of ports : 2

330611 - SWITCH, REVERSE LIGHT

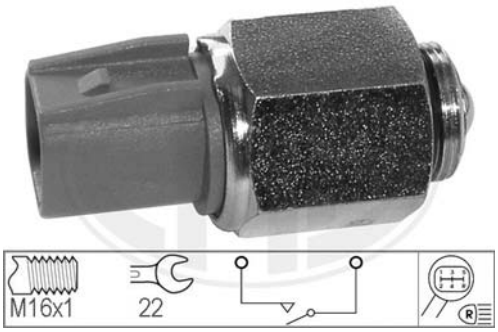

FORD
1433084, 6M2T 15520 AA
JAGUAR
C2S 22710
MAZDA
J C01 17 640
VOLVO
30774465

FORD
C-MAX, COUGAR, FOCUS, FOCUS C-MAX, GALAXY, MONDEO, S-MAX, TOURNEO CONNECT, TRANSIT CONNECT
JAGUAR
X-TYPE
MAZDA
3
VOLVO
C30, S40, S80, V50, V70

Note: Number of ports : 2

330615 - SWITCH, REVERSE LIGHT

IVECO
4746581

IVECO
79.13, 79.14, 90.13, 95.14, 100.13, 109.14, 115.14, 115.17, 135.14, 135.17

Note: Number of ports : 2

330616 - SWITCH, REVERSE LIGHT

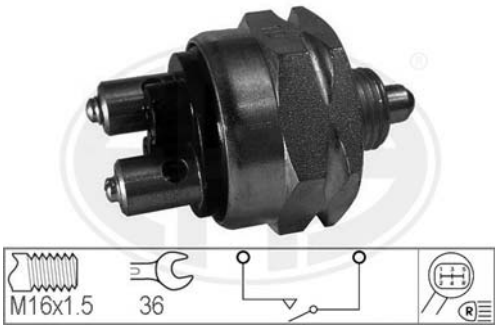

FIAT
4073976
NEW HOLLAND
5109221

FIAT-HITACHI, NEW HOLLAND
Tractors

Note: Number of ports : 2

330625 - SWITCH, REVERSE LIGHT

FORD
1096415, YC1T 15520 BB

FORD
TRANSIT

Note: Number of ports : 2

330627 - SWITCH, REVERSE LIGHT

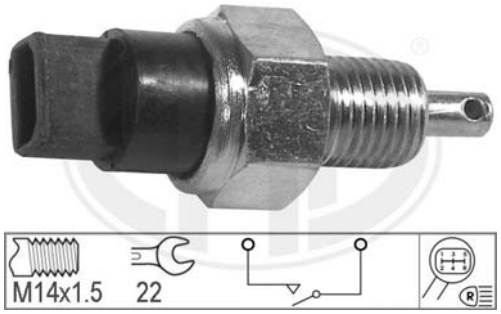

LADA
2108-3710410

LADA
SAMARA, SAMARA FORMA

Note: Number of ports : 2

330628 - SWITCH, REVERSE LIGHT

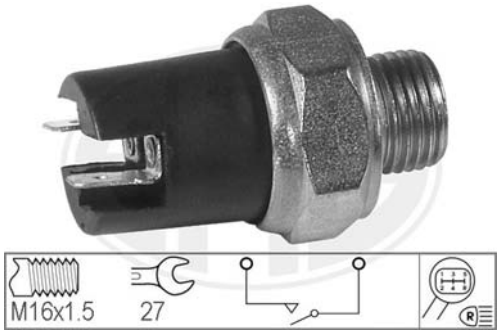

LADA
2121-3710180

LADA
NIVA

Note: Number of ports : 2

330681 - SWITCH, REVERSE LIGHT

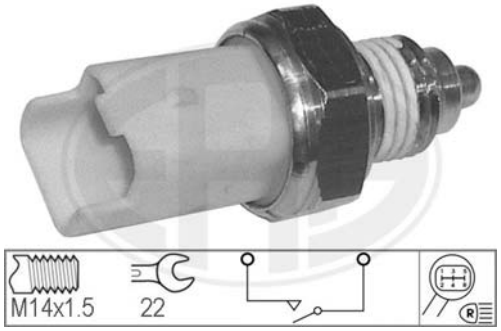

CITROENPEUGEOT
2257 43, 2257 52, 2257 59, 96 629 066 80
FIAT
71728934, 9633875580, 9659869680, 9662906680
SUZUKI
37610-73J01-000, 37610-73J03-000
TOYOTA
SU001-00467

CITROËN
BERLINGO, C15, C2, C3, C3 Picasso, C4, C4 Grand Picasso, C4 Picasso, C5, C8, DS3, EVASION, JUMPY, XANTIA, XSARA, XSARA PICASSO
FIAT
DUCATO, SCUDO, ULYSSE
LANCIA
PHEDRA, ZETA
PEUGEOT
1007, 206, 207, 207 CC, 207 SW, 3008, 306, 307, 308, 308 CC, 308 SW, 406, 407, 5008, 806, 807, EXPERT, EXPERT Tepee, PARTNER, PARTNER Tepee, RCZ
SUZUKI
LIANA
TOYOTA
COROLLA

Note: Number of ports : 2

330689 - SWITCH, REVERSE LIGHT

CITROENPEUGEOT
2257.22, 75 454 205
FIAT
75491289

CITROËN
CX, MEHARI
FIAT
DUCATO
TALBOT
SOLARA

Note: Number of ports : 2

330743 - SWITCH, REVERSE LIGHT

GENERAL MOTORS
94 848 874
TOYOTA
84210-04010, 84210-0K010, 84210-12040, 84222-12010
VW
J84 210 120 40

HOLDEN
APOLLO
LEXUS
ES
TOYOTA
4 RUNNER, ALTIS, AURIS, AVENSIS, AVENSIS VERSO, CAMRY, CAMRY SOLARA, CARINA, CELICA, COROLLA, DYNA, DYNA 150, ESTIMA, HIACE, HILUX, LAND CRUISER, LAND CRUISER 150, LAND CRUISER 90, LITEACE, MODELL F, MR 2, PASEO, PICNIC, PREVIA, RAV 4, STARLET, URBAN CRUISER, VERSO, YARIS, YARIS VERSO
VW
TARO

Note: Number of ports : 2

330744 - SWITCH, REVERSE LIGHT

VW
02A 945 413, 02A 945 413 B, 02A 945 413 C

AUDI
A3, TT
SEAT
CORDOBA, IBIZA, INCA, LEON, TOLEDO
SKODA
OCTAVIA
VW
CORRADO, GOLF, NEW BEETLE, PASSAT, POLO, VENTO

Note: Number of ports : 2

330745 - SWITCH, REVERSE LIGHT

FIAT
71742586
GENERAL MOTORS
9 204 032
NISSAN
25310-4A00B
OPEL
47 00 385
SUZUKI
37610-76G10-000

FIAT
SEDICI
NISSAN
PIXO
OPEL
AGILA
SUZUKI
ALTO, GRAND VITARA, IGNIS, JIMNY, LIANA, SPLASH, SWIFT, SX4, WAGON R, WAGON R+
VAUXHALL
AGILA

Note: Number of ports : 2

330746 - SWITCH, REVERSE LIGHT

FORD
4496964, 4813418, 5L84-15520-AA, 5L8Z-15520-AA, 8L84-15520-AA, 93860-39900
MAZDA
A C05 17 640A
NISSAN
32005-6J000, 32005-6J001, 32005-6J00A, 32005-95F0A
RENAULT
32 00 56J 000, 32 00 56J 00A

FORD
MAVERICK
HYUNDAI
COUPE
MAZDA
6, MPV, TRIBUTE
NISSAN
350 Z, 370 Z, 370 Z Roadster, ALMERA, ALMERA TINO, MICRA, PRIMERA, QASHQAI, X-TRAIL
RENAULT
GRAND SCENIC, KOLEOS, MEGANE, SCENIC

Note: Number of ports : 2

330747 - SWITCH, REVERSE LIGHT

MAZDA
A C04 17 640
NISSAN
32006-95F0A
RENAULT
32 00 66J 000, 32 00 66J 00A, 32 00 66J 00B

MAZDA
6, MPV
NISSAN
350 Z, 370 Z, 370 Z Roadster, ALMERA, ALMERA TINO, MICRA, PRIMERA, QASHQAI, X-TRAIL
RENAULT
GRAND SCENIC, KOLEOS, MEGANE, SCENIC

Note: Number of ports : 2

330748 - SWITCH, REVERSE LIGHT

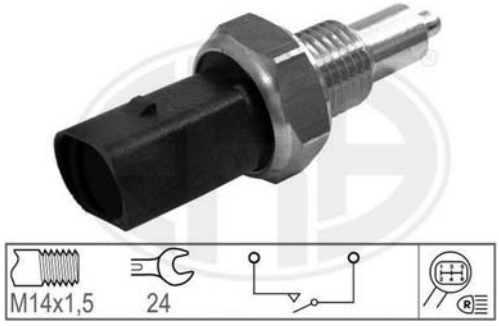

VW
01E 941 521 A, 01E 941 521 B

AUDI
A4, A6, A6 Allroad, A8, ALLROAD, R8
SEAT
EXEO
SKODA
SUPERB
VW
PASSAT, PHAETON

Note: Number of ports : 2

330749 - SWITCH, REVERSE LIGHT

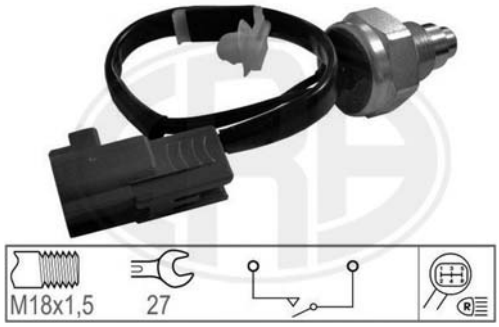

TOYOTA
84210-52010

TOYOTA
ALTIS, AURIS, COROLLA, YARIS

Note: Number of ports : 2

330750 - SWITCH, REVERSE LIGHT

GENERAL MOTORS
95 507 458
NISSAN
32006-00QAA
OPEL
44 21 512
RENAULT
32 00 549 13R, 82 00 209 496, 82 00 771 472

DACIA
LOGAN, LOGAN MCV, SANDERO
NISSAN
KUBISTAR
RENAULT
CLIO, CLIO Grandtour, FLUENCE, GRAND SCENIC, KANGOO, KANGOO BE BOP, LAGUNA, LOGAN, MASTER, MEGANE, MODUS, SANDERO, SCENIC, THALIA, TWINGO
VAUXHALL
MOVANO

Note: Number of ports : 2

330751 - SWITCH, REVERSE LIGHT

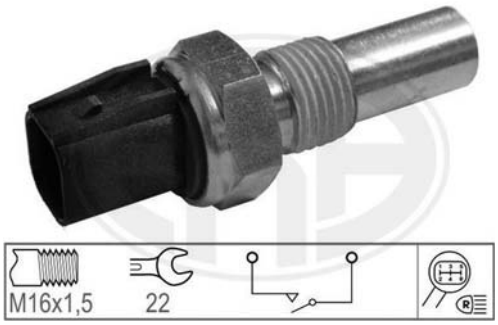

FORD
1435339, 6S6T-15520-AA, 9M5T-15520-AA

FORD
C-MAX, FIESTA, FOCUS, FOCUS C-MAX, FUSION, MONDEO

Note: Number of ports : 2

330752 - SWITCH, REVERSE LIGHT

CITROENPEUGEOT
2257 55
TOYOTA
84540-17010, 84540-70020

CITROËN
C1
PEUGEOT
107
TOYOTA
ALTIS, AURIS, AYGO, COROLLA, MR 2, YARIS

Note: Number of ports : 2

330753 - SWITCH, REVERSE LIGHT

VW
012 919 823 F

AUDI
A4, A6, A8
PORSCHE
BOXSTER
SKODA
SUPERB
VW
PASSAT

Note: Number of ports : 2

ERA S.p.A. - April 2012

VARIOUS

	page
Pressure Switch, Air Conditioning	657
Sensor, Compressed-air System	658

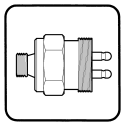

Pressure Switch, Air Conditioning
Interruttore a Pressione Climatizzatore
Pressostat, climatisation
Druckschalter, Klimaanlage

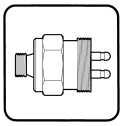

Sensor, Compressed-Air System
Sensore, Imp. Aria Compressa
Capteur, système d'air comprimé
Sensor, Druckluftanlage

ERA S.p.A. - April 2012

330421 - PRESSURE SWITCH, AIR CONDITIONING

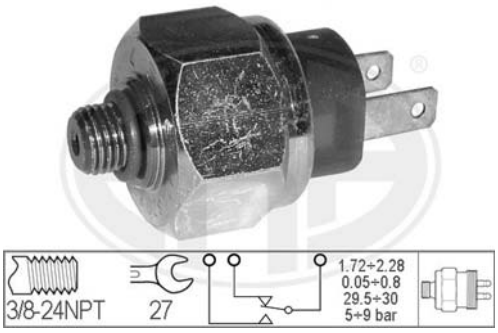

MERCEDES-BENZ
124 820 83 10, A 124 820 83 10

MERCEDES-BENZ
190, CABRIOLET, COUPE, E-CLASS, G-CLASS, KOMBI, S-CLASS, SL, SPRINTER, SPRINTER 2-t, SPRINTER 3-t
MERCEDES-BENZ
UNIMOG

Note: Number of ports : 2

330568 - PRESSURE SWITCH, AIR CONDITIONING

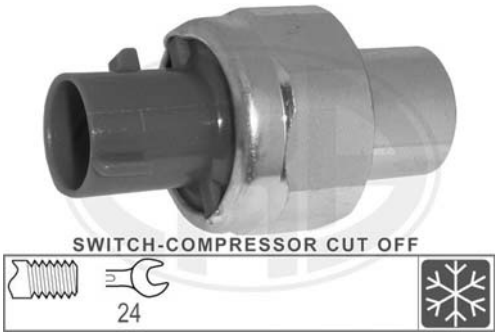

CHEVROLET
96 213 038
DAEWOO
96 177 469, 96 213 038

DAEWOO
Espero, Nexia

Note: Number of ports : 2

330371 - SENSOR, COMPRESSED-AIR SYSTEM

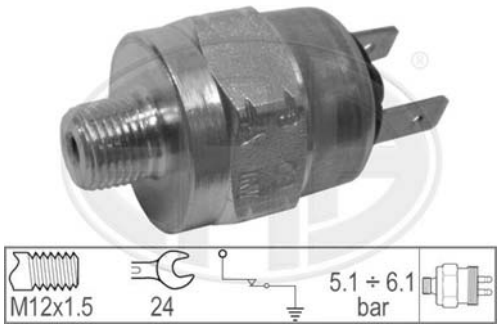

IVECO
3435124

IVECO
BUS

Note:

330372 - SENSOR, COMPRESSED-AIR SYSTEM

MAN
81 25521 60 17

MAN
BUS
STEYR

Note:

330373 - SENSOR, COMPRESSED-AIR SYSTEM

VOLVO
20382504

VOLVO
BUS - FH, NH

Note:

330374 - SENSOR, COMPRESSED-AIR SYSTEM

MAN
81 25520 00 43

MAN
STEYR

Note:

330375 - SENSOR, COMPRESSED-AIR SYSTEM

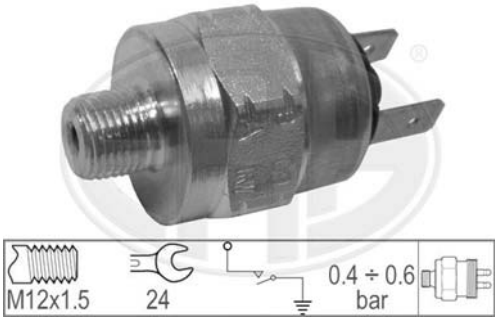

DAF
754800
MERCEDES-BENZ
000 763 26 10

DAF
BUS
MERCEDES
BUS, TRUCKS

Note:

330376 - SENSOR, COMPRESSED-AIR SYSTEM

MERCEDES-BENZ
000 763 20 10

MERCEDES
BUS, TRUCKS

Note:

330377 - SENSOR, COMPRESSED-AIR SYSTEM

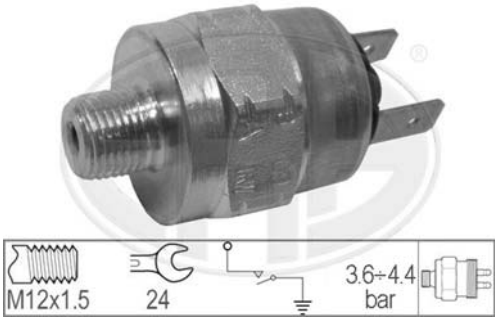

MERCEDES-BENZ
000 763 29 10

MERCEDES
BUS, TRUCKS

Note:

330378 - SENSOR, COMPRESSED-AIR SYSTEM

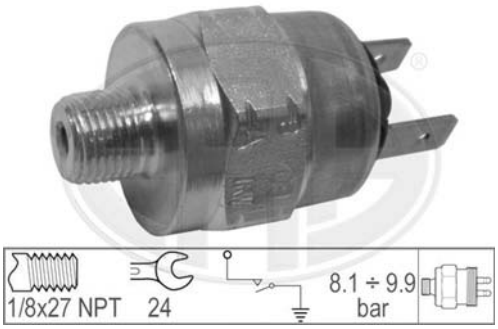

MASSEY FERGUSON
3381387 M3

MASSEY FERGUSON
TRACTORS

Note:

330380 - SENSOR, COMPRESSED-AIR SYSTEM

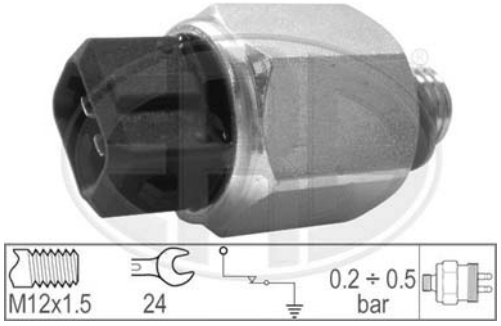

BMW
12 61 1 715 504

BMW

Note:

330381 - SENSOR, COMPRESSED-AIR SYSTEM

VOLVO
863169

VOLVO
B 12, F 10, F 12, F 16, FH 12, FH 16, FL 10, FL 12, FL 6, FL 7, N 10, NH 12

Note:

330382 - SENSOR, COMPRESSED-AIR SYSTEM

VOLVO
1622986

VOLVO
B 12, F 10, F 12, F 16, FH 12, FH 16, FL 10, FL 12, FL 6, FL 7, N 10, NH 12

Note:

330385 - SENSOR, COMPRESSED-AIR SYSTEM

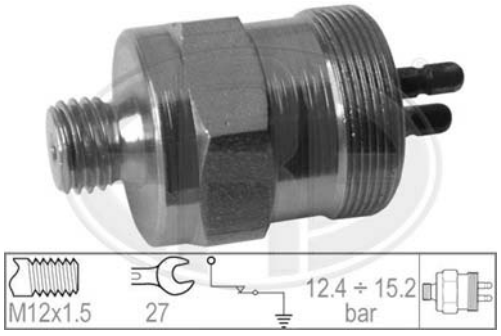

VOLVO
91 65 990

VOLVO
BUS, TRUCKS

Note:

330386 - SENSOR, COMPRESSED-AIR SYSTEM

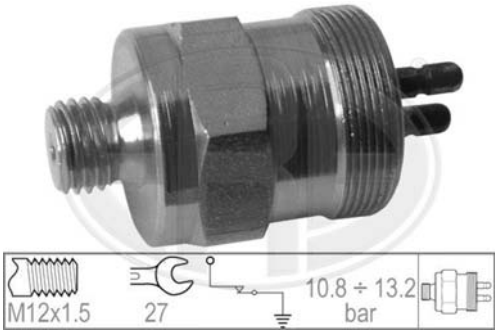

VOLVO
91 65 989

VOLVO
BUS, TRUCKS

Note:

330387 - SENSOR, COMPRESSED-AIR SYSTEM

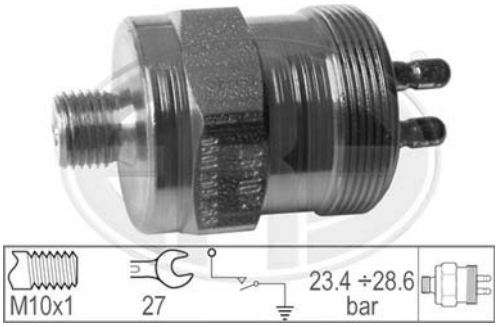

IVECO
MAN
MERCEDES
BUS, TRUCKS

Note:

330388 - SENSOR, COMPRESSED-AIR SYSTEM

MERCEDES-BENZ
003 545 20 14

MERCEDES
BUS, TRUCKS

Note:

330390 - SENSOR, COMPRESSED-AIR SYSTEM

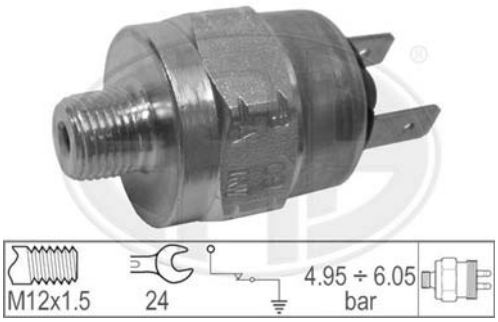

MERCEDES-BENZ
000 763 32 10

MERCEDES
BUS, TRUCKS

Note:

330391 - SENSOR, COMPRESSED-AIR SYSTEM

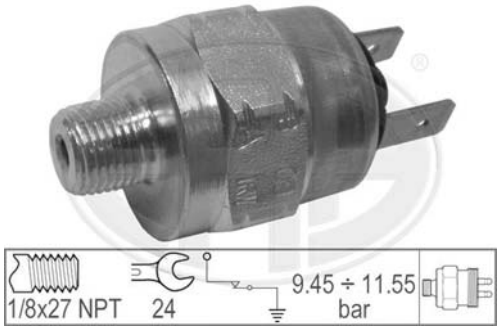

MASSEY FERGUSON
3381386 M1

MASSEY FERGUSON
TRACTORS

Note:

330392 - SENSOR, COMPRESSED-AIR SYSTEM

VOLVO
1087965

VOLVO
F 12, FH 12, FH 16, FL 10, FL 12, FL 7, NH 12

Note:

330393 - SENSOR, COMPRESSED-AIR SYSTEM

VOLVO
1087967

VOLVO
F 12, FH 12, FH 16, FL 10, FL 12, FL 7, NH 12

Note:

330395 - SENSOR, COMPRESSED-AIR SYSTEM

VOLVO
81 51 889

VOLVO
F 12, FH 12, FH 16, FL 10, FL 12, FL 7, NH 12

Note:

330396 - SENSOR, COMPRESSED-AIR SYSTEM

VOLVO
20424051

VOLVO
FH 12, FM 12, FM 9

Note:

330397 - SENSOR, COMPRESSED-AIR SYSTEM

VOLVO
39 63 472

VOLVO
FH, FM series

Note:

330398 - SENSOR, COMPRESSED-AIR SYSTEM

VOLVO
20424056

VOLVO
B 12
FH, FM series

Note:

330399 - SENSOR, COMPRESSED-AIR SYSTEM

VOLVO
39 63 479

VOLVO
FH, FM series

Note:

330400 - SENSOR, COMPRESSED-AIR SYSTEM

VOLVO
20424060

VOLVO
B 12, FH 12, FH 16, FM 10, FM 12, FM 7, FM 9

Note: Number of ports : 2

330401 - SENSOR, COMPRESSED-AIR SYSTEM

VOLVO
20382500

VOLVO
B 12, FH 12, FH 16, FM 10, FM 12, FM 7, FM 9

Note: Number of ports : 2

330402 - SENSOR, COMPRESSED-AIR SYSTEM

VOLVO
1087960, 20382505

VOLVO
B 12, F 10, F 12, F 16, FH 12, FH 16, FL 10, FL 12, FL 7, N 10, NH 12

Note: Number of ports : 2

330403 - SENSOR, COMPRESSED-AIR SYSTEM

VOLVO
1087961, 20382506

VOLVO
B 12

Note: Number of ports : 2

330404 - SENSOR, COMPRESSED-AIR SYSTEM

VOLVO
1087962, 20382507

VOLVO
F 10, F 12, F 16, FL 10, FL 7, N 10

Note: Number of ports : 2

330405 - SENSOR, COMPRESSED-AIR SYSTEM

VOLVO
1087963, 20382508

VOLVO
B 12, F 10, F 12, F 16, FH 12, FH 16, FL 10, FL 12, FL 6, FL 7, N 10, NH 12

Note: Number of ports : 2

330406 - SENSOR, COMPRESSED-AIR SYSTEM

VOLVO
1087964, 20382509

VOLVO
F 10, F 12, F 16, FL 10, FL 12, FL 7, N 10

Note: Number of ports : 2

330407 - SENSOR, COMPRESSED-AIR SYSTEM

VOLVO
1087965, 20382510

VOLVO
FH 12

Note: Number of ports : 2

330408 - SENSOR, COMPRESSED-AIR SYSTEM

VOLVO
1087967, 20382511

VOLVO
F 12, FH 12, FH 16, FL 10, FL 12, FL 7, NH 12

Note: Number of ports : 2

330411 - SENSOR, COMPRESSED-AIR SYSTEM

VOLVO
20382514

VOLVO
FH, FM series

Note: Number of ports : 2

330412 - SENSOR, COMPRESSED-AIR SYSTEM

VOLVO
20382518

VOLVO
FH, FM series

Note: Number of ports : 2

330420 - SENSOR, COMPRESSED-AIR SYSTEM

MERCEDES-BENZ
004 545 44 14

MERCEDES
BUS, TRUCKS

Note: Number of ports : 2

330422 - SENSOR, COMPRESSED-AIR SYSTEM

MAN
81 25520 00 58

MAN
BUS, TRUCKS
STEYR

Note: Number of ports : 2

330470 - SENSOR, COMPRESSED-AIR SYSTEM

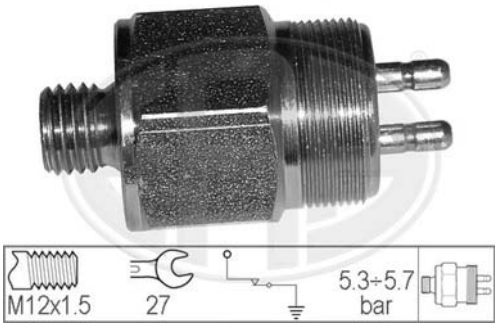

MERCEDES-BENZ
001 545 68 14

MERCEDES
BUS, TRUCKS

Note: Number of ports : 2

330471 - SENSOR, COMPRESSED-AIR SYSTEM

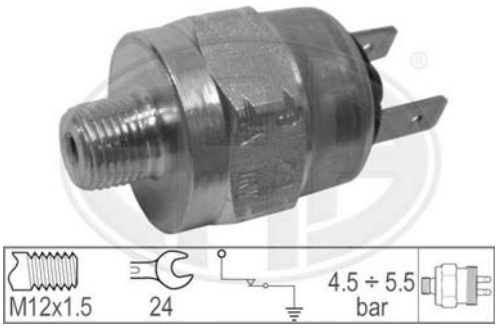

LIEBHERR
5029211

LIEBHERR

Note: Number of ports : 2

330472 - SENSOR, COMPRESSED-AIR SYSTEM

DAF
1317717

DAF
BUS, TRUCKS

Note: Number of ports : 2

330476 - SENSOR, COMPRESSED-AIR SYSTEM

VOLVO
20382517

DAF
MERCEDES
VOLVO
F 10, F 12, F 16, FL 10, FL 12, FL 7, N 10

Note:

330486 - SENSOR, COMPRESSED-AIR SYSTEM

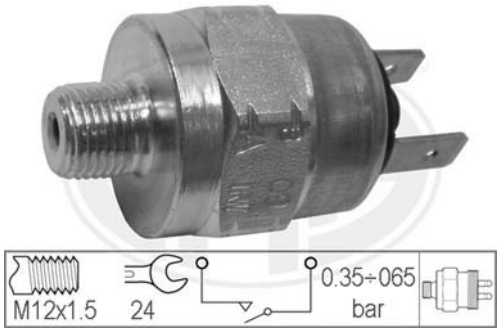

IVECO
MAN
MERCEDES
SCANIA
Wabco System

Note: Number of ports : 2

330487 - SENSOR, COMPRESSED-AIR SYSTEM

MERCEDES-BENZ
004 545 54 14

MERCEDES
VOLVO
FH, NH series

Note: Number of ports : 2

330488 - SENSOR, COMPRESSED-AIR SYSTEM

VOLVO
20424066, 3963486

VOLVO
FH, NH series

Note: Number of ports : 2

330499 - SENSOR, COMPRESSED-AIR SYSTEM

MERCEDES-BENZ
004 545 55 14

MERCEDES
BUS, TRUCKS

Note: Number of ports : 2

330505 - SENSOR, COMPRESSED-AIR SYSTEM

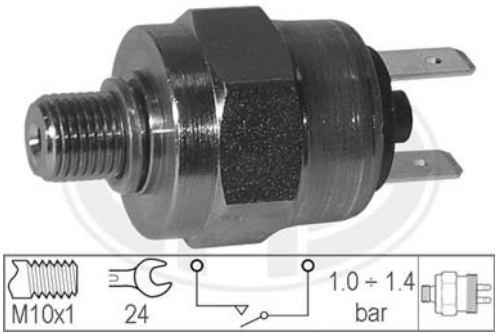

KHD
419 0850

KHD
IVECO
MAGIRUX DEUTZ

Note: Number of ports : 2

330506 - SENSOR, COMPRESSED-AIR SYSTEM

DAF
1437226
VOLVO
20424055, 39 63 475

DAF
VOLVO
FH, NH series

Note: Number of ports : 2

ERA S.p.A. - April 2012

TAVOLE COMPARATIVE
CROSS REFERENCE LIST

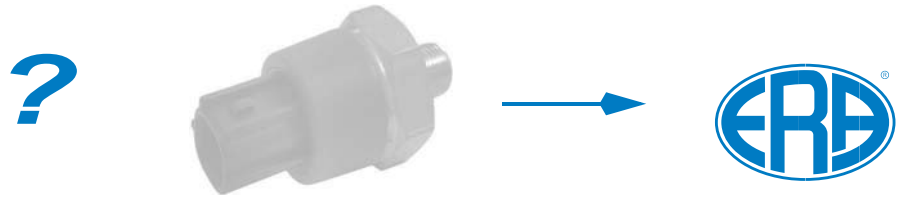

ALFA ROMEO 673
ATE 673
BMW 673
BOSCH 673
CHEVROLET 673
CHRYSLER 673
CITROENPEUGEOT 673
DAEWOO 674
DAF 675
DAIHATSU 675
FACET 675
FERRARI 677
FIAT 677
FORD 679
GENERAL MOTORS 681
HINO 681
HOLDEN 681
HONDA 681
HYUNDAI 681
ISUZU 681
IVECO 682
JAEGER 682
JAGUAR 682
KHD 682
KIA 682
LADA 682
LAND ROVER 682
LIEBHERR 682
LOMBARDINI 682
MAGNETI MARELLI 682
MAN 682
MASSEY FERGUSON 682
MAZDA 682
MERCEDES-BENZ 683
MINI 683
MITSUBISHI 683
NEW HOLLAND 683
NISSAN 683
OPEL 684
PIAGGIO 685
PORSCHE 685
RENAULT 685
ROVER 685
SAAB 686
SAME 686
SCANIA 686
SEAT 686
SIEMENS VDO 686
SKODA 686
SMART 686
SSANGYONG 686
SUBARU 686
SUZUKI 686
TOYOTA 686
TRW 687
VALEO 687
VAUXHALL 687
VOLVO 687
VW 688
ZASTAVA 689

Original equipment numbers and pictures in this catalogue are used for reference purposes only.

ERA S.p.A. - April 2012

ALFA ROMEO

119 11 11 010 00	330691
130884	330165
46760767	330346
510621	330002
533309	330165
60501195	330512
60501196	330347
60503687	330165
60504190	330002
60504210	330106
60506902	330317
60506988	330292
60513055	330535
60515008	330336
60515838	330083
60515839	330083
60523383	330691
60531609	330049
60533503	330267
60543482	330205
60549313	330291
60564432	330291
60565842	330206
60569340	330523
60585583	330434
60585603	330273
60593572	330205
60593573	330206
60593847	330000
60615819	330071
60622385	330071
60701852	330032
60745532	330165
60800340	330339
60805125	330051
60805536	330000
60806378	330145
60806379	330120
60806748	330205
60807764	330000
60808223	330273
60808331	330343
60809247	330295
60809521	330145
60809965	330279
60810083	330071
60810536	330071
60811250	330145
60811423	330243
60811520	330107
60812316	330343
60812439	330290
60812838	330064
60813343	330228
60813513	330064
60813687	330082
60813751	330120
60814251	330260
60816476	330495

ATE

03.3526-1900.0	330414
10.0522-4002.1	330419
10.0522-4005.1	330416

BMW

1 354 273	330012
1 382 385	330433
1 710 535	330129
12 61 1 277 591	330349
12 61 1 277 642	330348
12 61 1 710 509	330356
12 61 1 715 504	330380
12 61 1 730 160	330356
12 62 1 288 158	330115
12 62 1 710 511	330097
12 62 1 710 512	330097
12 62 1 747 281	330129
13 62 1 284 397	330116
13 62 1 357 414	330691
13 62 1 433 076	330643
13 62 1 433 077	330683
13 62 1 459 197	330133
13 62 1 707 366	330115
13 62 1 709 966	330116
13 62 2 242 184	330121
13 62 7 788 077	330683
23 01 7 838 935	330643
23 14 1 221 706	330256
23 14 1 352 153	330239
23 14 1 354 071	330239
23 14 1 434 584	330256
23 14 7 506 637	330256
34 33 1 150 922	330419
34 35 1 182 270	330416
6 908 786	330724
6 908 787	330724
6 928 031	330724
6 967 601	330724
61 31 0 141 214	330724
61 31 0 150 354	330724
61 31 0 300 846	330724
61 31 0 392 294	330724
61 31 0 398 202	330724
61 31 0 398 221	330724
61 31 0 406 809	330724
61 31 0 412 415	330724
61 31 1 243 414	330012
61 31 1 243 414	330348
61 31 1 350 645	330426
61 31 1 351 799	330317
61 31 1 352 153	330239
61 31 1 354 272	330012
61 31 1 354 272	330348
61 31 1 354 274	330012
61 31 1 354 274	330348
61 31 1 362 977	330416
61 31 1 368 786	330426
61 31 1 378 073	330208
61 31 1 378 207	330046
61 31 1 378 208	330046
61 31 1 378 210	330431
61 31 1 379 830	330426
61 31 1 382 385	330433
61 31 4 105 242	330724
61 31 4 114 226	330724
61 31 4 114 227	330724
61 31 6 908 786	330724
61 31 6 928 031	330724
61 31 6 957 151	330724
61 31 6 967 601	330724
61 31 8 360 417	330433
61 31 8 360 420	330046
61 31 8 360 421	330065
61 31 8 372 646	330724
61 31 8 372 647	330724
62 11 0 788 115	330090
756848001	330356
8 360 417	330433
8 372 647	330724

BOSCH

0 280 130 026	330116
0 280 130 032	330133
0 280 130 037	330115
0 280 130 041	330127
0 280 130 041-1CD	330127
0 280 130 053	330136
0 280 130 055	330121
0 280 130 056	330115
0 280 130 064	330653
0 280 130 066	330656
0 280 130 069	330133
0 280 130 084	330122
0 280 130 089	330115
0 281 002 169	330137
0 281 002 209	330137
0 344 004 018	330063
0 344 101 040	330348
0 344 101 044	330317
0 344 101 056	330368
0 344 101 077	330350
0 344 101 082	330004
0 344 101 082	330342
0 986 280 404	330624
0 986 344 036	330011
0 986 344 040	330348
0 986 344 044	330317
0 986 344 056	330368
0 986 344 077	330350
0 986 344 082	330342
0 986 345 008	330006
0 986 345 009	330007
0 986 345 118	330063

CHEVROLET

25 036 979	330117
96 177 604	330089
96 213 038	330568
96 314 357	330570
96 408 134	330567
96 610 001	330571

CHRYSLER

33004281	330650
47 20 599	330024
5226374	330650
56004815	330659
T0771821	330536

CITROEN PEUGEOT

0242 12	330266
0242 14	330531
0242 20	330084
0242 26	330158
0242 30	330527
0242 40	330531
0242 43	330527
0242 46	330116
0242 49	330158
0242 62	330133
0242 63	330086
0242 68	330147
0242 76	330645
0242 78	330160
0242 83	330154
0242 86	330637
1131 09	330003
1131 14	330010

Original equipment numbers and pictures in this catalogue are used for reference purposes only.

Tavole Comparative - Cross Reference List

Original equipment numbers and pictures in this catalogue are used for reference purposes only.

1131 44	330344
1131 45	330010
1131 61	330023
1131 78	330576
1131 82	330023
1131 98	330340
1131 C5	330026
1131 C7	330340
1131 J1	330022
1131 J2	330028
1131 K5	330026
1264 04	330292
1264 05	330169
1264 06	330267
1264 09	330169
1264 10	330201
1264 12	330169
1264 13	330292
1264 14	330167
1264 15	330169
1264 16	330267
1264 17	330203
1264 18	330207
1264 21	330269
1264 23	330180
1264 25	330271
1264 26	330188
1264 27	330215
1264 31	330194
1264 32	330207
1264 32	330293
1264 33	330295
1264 36	330272
1264 37	330188
1264 38	330271
1264 40	330188
1264 43	330194
1264 44	330272
1264 45	330271
1264 50	330197
126434	330279
1337 72	330086
1338 02	330086
1338 09	330109
1338 10	330588
1338 27	330575
1338 33	330554
1338 40	330556
1338 43	330639
1338 47	330134
1338 55	330588
1338 56	330588
1338 75	330657
1338 78	330134

1338 84	330588
1338 85	330155
1338 91	330657
1338 93	330148
1338 97	330551
1338 A5	330120
1338 A6	330551
1338 A7	330624
1338 C0	330742
1338 C1	330502
1338 C7	330137
1338 E2	330502
1338 F3	330552
1338 F7	330148
1338 F8	330552
1338 F9	330137
1338 G4	330619
1628 7P	330714
1920 C4	330110
1920 K9	330122
2127 C7	330430
2189 20	330722
2189 24	330722
2189 25	330736
2257 17	330236
2257 33	330251
2257 34	330249
2257 40	330249
2257 41	330251
2257 42	330513
2257 43	330681
2257 52	330681
2257 53	330513
2257 55	330752
2257 59	330681
2257.22	330689
4534 02	330438
4534 04	330036
4534 06	330032
4534 09	330052
4534 11	330060
4534 13	330036
4534 15	330052
4534 17	330050
4534 26	330074
4534 28	330715
4534 29	330064
4534 32	330051
4534 35	330704
4534 37	330713
4534 38	330520
4534 39	330518
4534 40	330718
4534 43	330519

4534 44	330716
4534 45	330518
4534 48	330629
4534 49	330518
4534 50	330517
4534 51	330060
4534 54	330723
4534 63	330629
4534 68	330738
4534.21	330704
4534.52	330704
54 224 83	330686
54 646 65	330345
54 908 01	330345
5446115	330168
5453674	330168
6366 F1	330721
6552 CZ	330048
6552 W5	330074
75 454 205	330689
79 100 339 31	330438
91 040 130	330010
91 040 370	330116
91 414 549	330116
91 500 881	330036
91 513 810 80	330292
91 514 017	330236
91 514 046	330167
91 514 733	330236
91 517 674	330207
91 519 272	330158
91 521 111	330344
91 521 113	330010
91 521 114	330010
95 492 854	330172
95 493 258	330171
95 494 332	330686
95 495 159	330345
95 495 385	330203
95 495 591	330527
95 548 678	330531
95 576 325	330203
95 579 683	330527
95 581 212	330531
95 612 640	330203
95 630 939	330267
95 632 734	330172
95 638 684	330272
95 640 493	330110
96 001 647	330036
96 005 949	330036
96 008 159	330160
96 009 503	330180
96 015 494	330269

96 015 496 80	330482
96 018 108	330251
96 018 110	330249
96 018 422	330147
96 018 426	330109
96 019 305	330207
96 026 617	330023
96 029 641	330563
96 033 248	330588
96 040 821	330060
96 040 821	330704
96 064 561	330180
96 064 750	330271
96 085 909	330215
96 089 138	330554
96 092 918	330645
96 131 470	330122
96 138 637	330188
96 138 637	330194
96 142 336	330575
96 203 847	330639
96 325 624 80	330502
96 346 679 80	330716
96 367 771	330624
96 367 771 80	330624
96 434 788 80	330718
96 506 884 80	330629
96 528 434 80	330722
96 554 141 80	330502
96 566 364	330552
96 629 066 80	330681
96 639 283 80	330722
96 656 023 80	330629
9661477580	330026
97 509 510	330086
97 519 138	330086

DAEWOO

25 036 834	330564
25 036 979	330117
3439088	330085
37830A82010	330009
8571005020X	330701
8571005030X	330701
90 196 375	330429
90 245 033	330244
90 411 977	330651
94 580 647	330429
96 177 469	330568
96 177 604	330089
96 181 508	330107
96 181 814	330563
96 182 634	330107

ERA S.p.A. Moncalieri (TO) Italy - tel: +39 011 6891511 - fax: +39 011 6472862 - www.eranet.it

96 192 077	330244
96 212 027	330436
96 213 038	330568
96 279 857	330651
96 312 343	330434
96 314 357	330570
96 325 864	330651
96 408 134	330567
96 567 247	330429
96 610 001	330571
96 815 490	330651

DAF

1317717	330472
1437226	330506
362606	330453
754800	330375

DAIHATSU

83420-16010	330093
83420-20020	330093
83420-87201	330087
83420-87701	330087
83420-87703	330100
83530-14030	330009
83530-30060	330008
83530-60030	330008
83530-87102	330008
83530-87103	330008
83530-87201	330008
83530-87205	330008
83530-87702	330008
83530-87703	330008
83530-87705	330009
89422-87101-000	330619
89422-87202-000	330619
89422-87701	330135

FACET

7.0000	330000
7.0001	330001
7.0005	330002
7.0006	330003
7.0007	330317
7.0008	330004
7.0010	330368
7.0011	330005
7.0014	330006
7.0015	330007
7.0016	330008
7.0017	330009
7.0017	330567
7.0021	330010
7.0022	330345
7.0023	330011
7.0026	330012
7.0027	330013
7.0031	330014
7.0035	330015
7.0042	330359
7.0045	330337
7.0046	330322
7.0047	330352
7.0048	330344
7.0051	330323
7.0052	330348
7.0056	330351
7.0057	330349
7.0058	330350
7.0069	330363
7.0069	330364
7.0070	330016
7.0071	330356
7.0072	330358
7.0075	330017
7.0076	330018
7.0080	330685
7.0085	330535
7.0086	330360
7.0090	330690
7.0091	330019
7.0094	330020
7.0095	330341
7.0096	330340
7.0108	330342
7.0110	330021
7.0114	330022
7.0116	330023
7.0119	330024
7.0124	330025
7.0125	330672
7.0129	330684
7.0130	330026
7.0131	330027
7.0132	330325
7.0133	330318
7.0134	330321
7.0135	330324
7.0136	330326
7.0138	330319
7.0139	330320
7.0140	330367
7.0141	330366
7.0145	330028
7.0146	330029
7.0147	330030
7.0149	330695
7.0150	330696
7.0151	330630
7.0156	330623
7.0162	330537
7.0163	330538
7.0166	330697
7.0175	330541
7.0178	330698
7.0179	330578
7.0181	330699
7.0182	330700
7.0187	330539
7.0189	330577
7.0195	330566
7.1000	330032
7.1001	330512
7.1003	330033
7.1004	330034
7.1007	330438
7.1008	330035
7.1009	330036
7.1010	330686
7.1012	330037
7.1014	330426
7.1015	330038
7.1017	330039
7.1022	330040
7.1034	330041
7.1041	330042
7.1044	330043
7.1044	330701
7.1047	330516
7.1049	330336
7.1050	330429
7.1052	330044
7.1055	330440
7.1056	330045
7.1058	330046
7.1060	330047
7.1065	330434
7.1066	330048
7.1067	330049
7.1068	330050
7.1069	330051
7.1070	330052
7.1073	330053
7.1074	330054
7.1075	330055
7.1076	330494
7.1077	330521
7.1079	330702
7.1080	330056
7.1081	330433
7.1082	330057
7.1086	330435
7.1087	330327
7.1088	330058
7.1089	330059
7.1090	330703
7.1091	330704
7.1092	330061
7.1095	330523
7.1098	330436
7.1101	330062
7.1102	330063
7.1104	330533
7.1107	330515
7.1108	330064
7.1110	330065
7.1111	330549
7.1111	330621
7.1112	330066
7.1113	330067
7.1114	330068
7.1115	330069
7.1116	330070
7.1123	330431
7.1125	330043
7.1126	330328
7.1127	330071
7.1129	330072
7.1131	330073
7.1132	330074
7.1133	330075
7.1134	330076
7.1137	330077
7.1138	330078
7.1139	330079
7.1140	330525
7.1142	330705
7.1143	330706
7.1148	330707
7.1149	330510
7.1150	330708
7.1151	330503
7.1152	330710
7.1153	330346
7.1155	330080
7.1156	330529
7.1157	330618
7.1159	330491
7.1161	330517
7.1162	330068
7.1163	330548
7.1165	330711
7.1169	330081
7.1170	330520

Original equipment numbers and pictures in this catalogue are used for reference purposes only.

Tavole Comparative - Cross Reference List

Original equipment numbers and pictures in this catalogue are used for reference purposes only.

7.1171	330526	7.3029	330092	7.3177	330130	7.3328	330552
7.1179	330518	7.3041	330093	7.3180	330131	7.3337	330558
7.1181	330712	7.3046	330094	7.3191	330132	7.3500	330314
7.1184	330713	7.3052	330095	7.3192	330133	7.3509	330145
7.1191	330714	7.3069	330096	7.3193	330316	7.3510	330466
7.1192	330715	7.3073	330284	7.3194	330651	7.3521	330554
7.1194	330716	7.3077	330097	7.3203	330315	7.3522	330146
7.1195	330717	7.3078	330098	7.3204	330134	7.3524	330147
7.1196	330519	7.3079	330099	7.3211	330135	7.3526	330148
7.1197	330718	7.3080	330100	7.3213	330638	7.3529	330149
7.1202	330719	7.3082	330101	7.3220	330555	7.3532	330313
7.1203	330492	7.3084	330102	7.3228	330562	7.3533	330150
7.1205	330547	7.3086	330103	7.3229	330136	7.3535	330151
7.1206	330532	7.3088	330104	7.3230	330619	7.3536	330152
7.1207	330720	7.3091	330105	7.3232	330636	7.3537	330289
7.1208	330721	7.3093	330687	7.3234	330640	7.3541	330312
7.1209	330514	7.3094	330536	7.3237	330290	7.3542	330639
7.1210	330722	7.3096	330106	7.3239	330137	7.3550	330153
7.1212	330723	7.3098	330107	7.3242	330561	7.3553	330154
7.1213	330629	7.3101	330286	7.3243	330657	7.3554	330155
7.1214	330430	7.3102	330688	7.3248	330530	7.3558	330147
7.1215	330724	7.3110	330108	7.3251	330692	7.4000	330156
7.1217	330060	7.3113	330109	7.3252	330138	7.4007	330157
7.1220	330725	7.3114	330110	7.3254	330139	7.4029	330527
7.1221	330726	7.3119	330111	7.3255	330644	7.4030	330158
7.1222	330727	7.3121	330112	7.3257	330141	7.4056	330159
7.1223	330728	7.3124	330113	7.3258	330141	7.4060	330160
7.1224	330729	7.3125	330114	7.3260	330497	7.4074	330161
7.1225	330730	7.3126	330115	7.3261	330142	7.4075	330162
7.1227	330731	7.3127	330691	7.3262	330656	7.4078	330308
7.1229	330545	7.3128	330116	7.3264	330509	7.4085	330309
7.1230	330544	7.3129	330117	7.3268	330528	7.4088	330645
7.1231	330597	7.3131	330118	7.3271	330559	7.4095	330163
7.1236	330733	7.3136	330119	7.3272	330643	7.4100	330307
7.1237	330734	7.3139	330333	7.3273	330560	7.4104	330288
7.1248	330735	7.3143	330120	7.3276	330624	7.4107	330164
7.1249	330736	7.3144	330642	7.3277	330143	7.4109	330556
7.1250	330614	7.3146	330287	7.3278	330546	7.4112	330285
7.1252	330737	7.3147	330121	7.3279	330683	7.4113	330557
7.1254	330738	7.3148	330122	7.3284	330144	7.4114	330575
7.1260	330739	7.3151	330334	7.3285	330585	7.4126	330311
7.1271	330740	7.3154	330123	7.3286	330495	7.4131	330637
7.1273	330741	7.3155	330583	7.3291	330551	7.4132	330646
7.3000	330082	7.3155	330653	7.3292	330502	7.5000	330291
7.3002	330083	7.3155	330655	7.3293	330742	7.5001	330484
7.3003	330084	7.3156	330587	7.3294	330584	7.5002	330165
7.3005	330085	7.3156	330612	7.3299	330648	7.5004	330266
7.3007	330086	7.3157	330124	7.3300	330647	7.5005	330166
7.3008	330531	7.3160	330641	7.3301	330658	7.5007	330167
7.3009	330087	7.3165	330125	7.3302	330586	7.5008	330292
7.3010	330088	7.3170	330126	7.3303	330652	7.5011	330483
7.3014	330089	7.3171	330127	7.3308	330588	7.5013	330168
7.3015	330090	7.3172	330128	7.3318	330693	7.5016	330169
7.3028	330091	7.3176	330129	7.3326	330553	7.5017	330170

ERA S.p.A. Moncalieri (TO) Italy - tel: +39 011 6891511 - fax: +39 011 6472862 - www.eranet.it

Tavole Comparative - Cross Reference List

7.5018	330171
7.5019	330303
7.5020	330172
7.5027	330296
7.5031	330273
7.5032	330297
7.5034	330173
7.5036	330174
7.5049	330175
7.5069	330176
7.5093	330177
7.5101	330275
7.5102	330178
7.5103	330179
7.5110	330634
7.5111	330269
7.5117	330277
7.5122	330180
7.5128	330181
7.5129	330182
7.5130	330183
7.5131	330276
7.5134	330563
7.5135	330184
7.5137	330185
7.5137	330610
7.5142	330186
7.5143	330187
7.5145	330188
7.5146	330189
7.5147	330301
7.5150	330668
7.5152	330534
7.5165	330591
7.5166	330622
7.5169	330190
7.5173	330191
7.5182	330298
7.5187	330293
7.5189	330192
7.5196	330193
7.5197	330282
7.5200	330270
7.5201	330194
7.5205	330195
7.5208	330196
7.5220	330589
7.5228	330667
7.5230	330197
7.5233	330198
7.5246	330633
7.5262	330199
7.5264	330310
7.5278	330675

7.5280	330599
7.5289	330674
7.5291	330620
7.5600	330200
7.5601	330201
7.5602	330202
7.5604	330267
7.5605	330268
7.5606	330203
7.5607	330204
7.5609	330294
7.5610	330205
7.5611	330206
7.5612	330207
7.5615	330304
7.5616	330631
7.5617	330208
7.5618	330209
7.5619	330210
7.5622	330279
7.5624	330211
7.5626	330212
7.5627	330213
7.5628	330214
7.5629	330272
7.5630	330215
7.5631	330271
7.5632	330302
7.5633	330305
7.5637	330216
7.5639	330217
7.5642	330279
7.5643	330295
7.5644	330306
7.5645	330218
7.5647	330219
7.5649	330220
7.5650	330281
7.5651	330283
7.5652	330280
7.5653	330221
7.5654	330222
7.5655	330223
7.5658	330278
7.5662	330224
7.5668	330225
7.5674	330226
7.5680	330227
7.5681	330228
7.5682	330229
7.5688	330300
7.5689	330299
7.5690	330230
7.5692	330231

7.5701	330477
7.6000	330338
7.6001	330347
7.6002	330335
7.6006	330441
7.6007	330232
7.6009	330233
7.6010	330234
7.6011	330235
7.6015	330236
7.6017	330237
7.6019	330689
7.6021	330238
7.6029	330239
7.6036	330240
7.6038	330241
7.6042	330627
7.6066	330339
7.6067	330243
7.6073	330244
7.6074	330628
7.6077	330246
7.6084	330247
7.6096	330248
7.6099	330249
7.6102	330446
7.6107	330250
7.6108	330251
7.6109	330252
7.6111	330743
7.6113	330464
7.6114	330253
7.6116	330254
7.6117	330501
7.6124	330522
7.6125	330442
7.6126	330255
7.6131	330256
7.6140	330257
7.6142	330258
7.6143	330343
7.6149	330259
7.6193	330744
7.6195	330753
7.6196	330260
7.6205	330261
7.6211	330262
7.6212	330263
7.6215	330264
7.6216	330265
7.6217	330513
7.6218	330681
7.6219	330745
7.6231	330746

7.6232	330747
7.6238	330511
7.6239	330508
7.6242	330593
7.6242	330611
7.6245	330543
7.6252	330504
7.6256	330748
7.6261	330749
7.6265	330594
7.6266	330579
7.6267	330604
7.6271	330750
7.6272	330603
7.6283	330751
7.6295	330752
7.6317	330569
7.6321	330625
ST 044	330531

FERRARI

121720	330133
125769	330116
172750	330116

FIAT

1307077080	330178
1307077080	330197
31331116	330062
33331115	330013
34362106	330083
3900908	330032
3904637	330032
3916074	330335
3916083	330335
3917315	330032
3919769	330335
3921883	330032
4022865	330062
4035421	330032
4067872	330082
4067916	330032
4073976	330616
4108672	330082
4111819	330165
4114572	330291
4124209	330032
4133922	330000
4141538	330156
4143258	330347
4151243	330001
4151246	330344
4151564	330001

Original equipment numbers and pictures in this catalogue are used for reference purposes only.

Tavole Comparative - Cross Reference List

Original equipment numbers and pictures in this catalogue are used for reference purposes only.

4152127	330001
4163888	330156
4169122	330156
4171667	330083
4177122	330032
4177124	330032
4177172	330032
4185217	330156
4189508	330156
4209632	330338
4220470	330032
4220471	330032
4235333	330291
4249594	330000
4263597	330291
4276954	330082
4298311	330000
4304418	330001
4305685	330001
4318331	330291
4334613	330156
4338581	330170
4340878	330291
4345643	330032
4345645	330032
4349082	330082
4356090	330032
4356373	330338
4381973	330032
4407984	330082
4409505	330082
4414583	330000
4414599	330000
4414600	330082
4414779	330156
4415441	330335
4422049	330000
4425340	330335
4431182	330001
4443505	330335
4448131	330082
4459907	330000
4473333	330001
4477080	330483
4477081	330483
4478951	330484
46125769	330116
46410523	330243
46410524	330258
46412308	330206
46413969	330221
46414596	330555
46421540	330343
46423232	330515
46433243	330064
46434553	330260
46449499	330124
46469865	330137
46472179	330137
46474599	330560
46474712	330143
46474713	330143
46477022	330120
46477717	330228
46478033	330279
46512059	330618
46519703	330064
46520219	330179
46520384	330561
46520915	330559
46530958	330617
46543839	330051
46554621	330142
46742766	330051
46742974	330518
46742976	330520
46752843	330491
46753479	330495
46817710	330508
46824133	330693
46834703	330520
46837391	330492
46840510	330517
46840511	330520
4746856	330688
4824207	330314
4837950	330148
4850371	330120
4998770	330001
4998897	330347
50000969	330273
50005994	330228
50008757	330340
500319244	330051
500349643	330293
504026706	330684
504127558	330148
504128963	330314
504310254	330684
51713873	330518
51742745	330514
51824727	330736
51831054	330735
5428649	330000
5494830	330531
5495159	330345
55188058	330142
55189236	330258
55189238	330508
55190791	330553
55193203	330142
55199579	330107
55202374	330340
55203408	330258
55331172	330291
553321200	330008
553321205	330008
55354325	330366
5556508	330000
55701395	330721
55701396	330720
5927407	330001
5934064	330201
5934084	330201
5951524	330201
5951985	330484
5951987	330484
5954516	330336
5958828	330202
5964877	330336
5969930	330314
5972332	330116
5975552	330338
5977192	330200
5977316	330338
5992746	330273
5994949	330338
5997492	330241
60513205	330116
60534312	330133
60543482	330275
60576529	330124
60593844	330340
60668847	330519
60685431	330520
60800167	330116
60800522	330133
60807244	330340
60808142	330116
60808371	330340
60809565	330124
6081220	330121
6081224	330121
60814402	330143
60814715	330137
60816500	330520
60816501	330517
631331116	330062
633331115	330013
6553306205	330008
6553321200	330008
6553321205	330008
7056776	330347
71716685	330693
71718201	330495
71719393	330693
71719525	330244
71728934	330681
71739582	330244
71742586	330745
71742588	330723
71745445	330244
71746722	330720
7512908	330156
7547977	330120
7548005	330102
75491289	330689
7553258	330145
7558930	330294
7565135	330339
7570837	330179
7576281	330202
7576327	330206
7576345	330205
7580599	330241
7583398	330200
7586250	330178
7588802	330082
7588847	330156
7588882	330082
7588883	330102
7588920	330156
7596228	330205
7604097	330117
7615563	330339
7619027	330048
7619028	330049
7619084	330049
7627401	330051
7627639	330050
7628231	330494
7628232	330702
7628799	330202
7642522	330279
7647004	330133
7655732	330228
7663320	330290
7669143	330656
7681395	330340
7682536	330051
7682537	330050
7686344	330258
7695951	330202
7695951	330206
7702713	330294
7705830	330340

ERA S.p.A. Moncalieri (TO) Italy - tel: +39 011 6891511 - fax: +39 011 6472862 - www.eranet.it

Tavole Comparative - Cross Reference List

7706596	330340
7711531	330343
7728057	330293
7735919	330641
77363457	330142
7738223	330121
7738581	330279
7738582	330295
7745216	330221
7748867	330273
7762300	330145
7762302	330314
7778980	330107
7910247507	330084
7910248333	330685
8122459	330291
82280950	330291
82286103	330291
82304822	330032
82366629	330335
82416969	330032
82416970	330336
82419960	330049
82430987	330275
82436409	330275
82436410	330273
82444120	330049
82444707	330521
82465533	330273
82477919	330207
82477919	330273
82483048	330064
91118618	330241
91514733	330236
9406475080	330271
9459005	330336
9563868480	330272
9564949380	330110
9601810880	330251
9601811080	330249
9601842280	330147
9601842680	330109
9603324880	330588
9604082180	330704
9606177280	330074
9606456180	330188
9608913880	330554
9609291880	330645
9609352480	330249
9613147080	330122
9614233680	330575
9618305780	330023
9618572580	330134
9619403780	330060
9619403980	330074
9620384780	330639
9621000680	330588
9625202480	330155
9628454680	330624
9629968880	330188
9631846480	330026
9632562080	330502
9633518580	330742
9633875580	330681
9633875680	330513
9636777180	330624
9639888380	330715
9643184680	330713
9650688480	330629
9653868380	330060
9653868480	330704
9659173880	330028
9659869680	330681
9659870380	330513
9662906680	330681
9662906780	330513
9665602380	330629
98442879	330684
98469129	330000
99455420	330137

FORD

0409160	330005
1008790	330612
1013062	330600
1020872	330601
1021795	330590
1027970	330005
1029819	330263
1030909	330602
1044350	330440
1044902	330705
1044903	330706
1047284	330640
1053881	330028
1053882	330028
1057836	330613
1062670	330549
1066389	330526
1066391	330525
1066811	330005
1071478	330596
1084764	330028
1089854	330586
1090200	330591
1094738	330318
1094739	330324
1095149	330028
1096320	330030
1096415	330625
1097757	330152
1100619	330496
1100736	330546
1104480	330598
1108770	330725
1112601	330263
1116647	330029
1119746	330579
1119830	330621
1124770	330496
1137034	330263
1204700	330502
1209514	330725
1213 353	330579
1223089	330740
1224326	330734
1226188	330029
1227274	330580
1227338	330740
1227340	330734
1230986	330726
1231943	330502
1309298	330028
1331294	330287
1342631	330502
1343269	330726
1363198	330028
1363512	330029
1371947	330351
1374390	330066
1381509	330603
1383960	330263
1406051	330604
1414897	330005
1433084	330611
1435339	330592
1435339	330751
1438727	330579
1439597	330579
1439868	330733
1441361	330593
1444282	330580
1457399	330725
1459209	330546
1461586	330594
1478163	330033
1484876	330585
1486742	330026
1514133	330579
1535416	330340
1543231	330517
1572591	330033
1583836	330091
1591388	330088
1604918	330042
1610486	330232
1610487	330232
1625687	330595
1626473	330115
1639283	330120
1640040	330096
1646357	330010
1646398	330182
1647828	330005
1652164	330232
1652990	330185
1654978	330250
1657685	330119
1669948	330287
1669949	330103
1669963	330342
1669964	330341
1669965	330286
1669989	330322
1669990	330151
1677533	330734
1701341	330088
1784077	330096
1953653	330359
1953654	330359
1953659	330044
1957002	330691
1L24 12A648 BA	330144
1M21 15520 AA	330579
1S7A 9278 AA	330029
1S7T 13480 AA	330621
1U5T 9278 AA	330623
2S6Q 12A648 AA	330502
2S6Q 12A648 AB	330502
2S6Q 9278 AA	330026
2S6Q 9278 AB	330026
3024539	330009
3405645	330130
3465427	330130
3466716	330005
3553091	330623
3600688	330009
3601374	330130
3696907	330595
3857955	330584
3901186	330609
3922097	330081
3929104	330640
3936774	330605
3999215	330606

Original equipment numbers and pictures in this catalogue are used for reference purposes only.

Tavole Comparative - Cross Reference List

Original equipment numbers and pictures in this catalogue are used for reference purposes only.

3F1T 10884 AA	330607
3M51 9278 AA	330029
3M51 9278 AB	330029
3M5T 13480 AC	330597
3M5T-11A152-AB	330740
3M5T-9C872-AB	330734
3M5T-9C872-AC	330734
3S71 9278 AB	330028
3S7T 15520 AA	330580
3S7T 15520 AB	330580
4132108	330008
4176807	330623
4323633	330144
4337456	330144
4496964	330746
4517136	330607
4526441	330594
4537712	330640
4813418	330746
4832217	330597
4832219	330734
4C1T 15520 AA	330594
4C1T 15520 AB	330594
4M5T-7C534-AA	330726
5040463	330584
5042970	330144
5L84-15520-AA	330746
5L8Z-15520-AA	330746
6005474	330232
6031219	330441
6033136	330232
6058836	330091
6076967	330096
6077896	330168
6077897	330168
6077985	330168
6080608	330005
6086163	330005
6088639	330033
6089985	330042
6090246	330014
6098273	330088
6098273	330091
6104433	330168
6104434	330168
6104435	330303
6108298	330101
6113258	330101
6122039	330088
6136366	330101
6141932	330101
6142676	330185
6144361	330183
6145142	330131
6145143	330113
6146107	330182
6146110	330182
6146864	330101
6154134	330211
6163243	330014
6168439	330182
6169111	330182
6169112	330182
6169113	330182
6170902	330005
6178267	330259
6186463	330185
6186464	330185
6190786	330229
6193368	330125
6198827	330158
6199395	330250
6489741	330622
6496665	330182
6499475	330005
6513125	330005
6539971	330005
6590140	330527
6590141	330158
6635175	330587
666R 15520 AA	330603
6703036	330014
6716335	330005
6765706	330608
6800511	330066
6810428	330550
6871978	330250
6G9T-11A152-AA	330733
6M21 10884 AA	330546
6M21 15520 AA	330579
6M21-9E740-AA	330725
6M2T 15520 AA	330611
6M2T 15520 BA	330604
6M5G 9278 AA	330351
6S6T 15520 AA	330592
6S6T-15520-AA	330751
7001604	330610
7001605	330211
7001606	330229
7001608	330182
7001609	330622
7001611	330185
7001612	330599
7001614	330183
7029404	330078
7029405	330079
7029406	330077
7072644	330024
7128327	330596
7158126	330144
7171007	330131
71BB 13480 AC	330033
71BB 13480 AD	330033
71BG 15520 EA	330232
7203359	330123
7210731	330288
7210733	330164
7215734	330440
7215818	330280
7262702	330705
7280558	330162
7291993	330706
7334637	330131
7355021	330163
76BG 15520 AA	330232
76BG 15520 AB	330232
76BG 15520 AIB	330232
77FB 10884 AA	330091
77FB 8B607 A3D	330168
77FG 15520 AA	330441
78FB 000 8B607 A	330168
7M51 12A648 AA	330585
81AB 10884 AA	330096
81AB 8B607 A1A	330168
81AB 8B607 A2A	330168
81AB 9278 AA	330005
81AB 9278 BA	330005
81EB 10884 AA	330088
81EB 10884 AA	330091
82GB 13480 AA	330042
84AB 10884 BA	330096
84DA 10884 AA	330101
84V8 10884 AA	330088
85AB 8B607 A2B	330182
85AB 8B607 A3A	330182
85AB 8B607 A3B	330182
85BB 8B607 BA	330183
85BB 8B607 BB	330183
85FB 10884 AA	330101
85GB 8B607 B1A	330185
85GB 8B607 BB	330610
86AB 10884 AA	330101
86AB 9278 BA	330005
86AB 9278 BB	330005
86FG 15520 AA	330250
86GB9278AB	330010
86VB 10884 AA	330131
86VB 10884 BA	330113
87BB 8B607 AA	330211
87BB 8B607 AB	330211
88VB 15520 AA	330259
89BB 8B607 AC	330229
89FB 10884 AA	330119
89FB 8B607 A1A	330182
89FB 8B607 AA	330182
89FB 8B607 AB	330182
89FG 15520 AB	330250
8L3A 6G004 AA	330584
8L84-15520-AA	330746
90GB 10B843 AA	330527
91AB 10884 AA	330125
91AB 10884 BB	330612
91AB 8B607 A2A	330622
91AB 8B607 AB	330622
91AB 8B607 BD	330591
92AB 13480 AA	330066
92AB 13480 AB	330066
92AB 8B607 AA	330185
92FB 8B607 AB	330599
92FG 15520 A2A	330250
92VB 10884 AA	330587
92VB 9278 AA	330014
93860-39900	330746
93BB 10884 AA	330608
93BB 13480 BB	330549
93BB 13480 BC	330549
93BB 9C872 AD	330078
93BB-9C872-BC	330079
93ZT 15520 BC	330601
94BB 9C872 AC	330077
95GB 10884 AA	330131
95GB 13480 AA	330596
95GB 13480 AB	330596
95VB 10884 AB	330600
95VB 10884 BA	330131
95VW 10884 AA	330287
95VW 10884 AB	330287
95VW 10884 BA	330103
95VW 12A648 BA	330286
95VW 13480 AA	330440
95VW 13480 BB	330440
95VW 8B607 DA	330288
95VW 8B607 EA	330164
95VW 8B607 EB	330163
95VW 8B607 FA	330164
95VW 8B607 GA	330280
95VW 8B607 HA	330162
95VW 8B607 LA	330151
95VW 8B607 MA	330152
95VW 9278 BA	330342
95VW 9278 CA	330322
95VW 9278 CA	330341
95VW 9278 DA	330318
95VW 9278 EA	330324
95VW-10A998-AA	330123
95VW-9E740-AB	330705

ERA S.p.A. Moncalieri (TO) Italy - tel: +39 011 6891511 - fax: +39 011 6472862 - www.eranet.it

95VW-9E740-BA	330706
96FB 10884 AA	330612
96WT 15520 BB	330590
978F 12A648 AA	330640
97FB 10884 AA	330613
97FG 15520 AA	330263
97FG 15520 AB	330263
97FG 15520 AC	330263
97FG 15520 AD	330263
97ZT 15520 BA	330602
98AB 7C534 AA	330526
98AB 7C534 BA	330525
98AB 9278 AA	330028
98AB 9278 BA	330030
98AB 9278 CA	330028
98FU 10884 BA	330598
9M5T-15520-AA	330751
9S51 13480 AA	330517
9S51 9278 AA	330340
AA6T-9C872-AA	330734
B3C8 18840	330130
B593 18840 A	330130
C5EH 10884 B	330088
D1FZ 10884 B	330088
D2AF 9278 AA	330595
D8RZ 8B607 C	330168
E0RZ 13480 A	330033
E53Z 9278 A	330008
E5RY 13480 A	330042
E7GZ 9278 A	330008
E9BZ-9278-A	330009
F2AF 12A648 AA	330550
F32Z 12A648 A	330130
F42Z 10884 A	330130
F5AF 12A648 AA	330144
F5AF 12A648 AB	330144
F65F 6G004 AB	330584
F6DZ 19E702 A	330550
F77F 10884 AB	330609
F77F 10884 BB	330605
F77Z 12A648 AA	330640
F83F 10884 AA	330606
F8AF 9278 AA	330623
F8DF 12A650 NDMR	330595
V85SF 12A648 AA	330115
V86HF-12A648-AA	330120
XM21 10884 BA	330546
XM21 8A570 BA	330496
XM34 13480 BA	330081
XM34 9278 CA	330008
XS4T 15520 AB	330593
XS6E 12A648 BA	330586
XS6F 12A648 BA	330586
XU3F 12A648 AA	330640
YC1T 15520 BB	330625
YM21-9E740-AA	330725

GENERAL MOTORS

09 185 906	330721
09 185 907	330720
10 083 510	330635
10 105 810	330574
10 106 210	330566
10 179 510	330009
13 173 407	330547
13 178 792	330721
15 326 386	330117
55 701 395	330721
55 701 396	330720
9 110 578	330692
9 160 984	330707
9 175 172	330712
9 185 907	330720
9 204 032	330745
90 458 542	330433
91 166 991	330708
91 49 766	330548
93 160 284	330630
93 180 245	330697
93 194 931	330723
93 197 675	330730
93 197 677	330729
93 198 166	330698
93 198 196	330630
93 851 952	330728
94 109 863	330701
94 848 874	330743
95 507 458	330750
96 325 864	330651
96 815 490	330651

HINO

83420-1060	330093

HOLDEN

8941098630	330701

HONDA

35350 S04 003	330059
35350 SK4 E00	330061
35350 SK4 E01	330061
36750 SE0 003	330701
36750 SE0 013	330701
37240 634 671	330009
37240 657 003	330006
37240 657 013	330006
37240 657 305	330006
37240 P13 003	330006
37240 P5T G00	330019
37240 P5T G01	330356
37240 PA6 004	330006
37240 PCX 003	330006
37240 PD2 003	330007
37240 PD2 004	330007
37240 PHM 003	330022
37240 PLZ D00	330007
37240 PT0 004	330007
37240 PT0 014	330007
37240 PT0 023	330007
37750 611 154	330087
37750 PH2 014	330095
37760 634 005	330174
37760 P00 003	330193
37760 P00 004	330193
37760 PB2 003	330174
37760 PLZ E01	330193
37773 P5T G00	330196
37773 P5T G10	330187
37773 PDD E01	330196
37773 PDD E11	330187
37870 PLC 004	330648
37870 PLZ D00	330137
37870 PNA 003	330648
37870 RAA A01	330648
37870 RBD E01	330137

HYUNDAI

25360-24000	330668
25360-33010	330634
25360-34000	330670
25360-37100	330633
25360-37200	330675
25360-37230	330678
25360-37250	330667
25360-43800	330669
39220-02500	330582
39220-02510	330665
39220-21310	330562
39220-21320	330562
39220-21330	330562
39220-22000	330116
39220-2X100	330581
39220-35510	330642
39220-35520	330642
39220-35710	330619
39220-38010	330664
39220-38020	330632
39220-38030	330632
39220-3C100	330642
39230-26600	330574
39230-26700	330632
39230-42000	330663
46386-22600	330666
93810-22100	330081
93810-32000	330043
93810-32001	330043
93810-38100	330043
93810-38110	330043
93810-3K000	330043
93860-02001	330262
93860-02002	330262
93860-36100	330247
93860-39003	330569
93920-37100	330677
94650-21020	330660
94650-29100	330160
94650-29101	330160
94650-32500	330100
94650-32510	330100
94650-32520	330100
94650-42050	330661
94650-42051	330661
94650-42060	330662
94650-42061	330662
94655-29000	330639
94750-02000	330700
94750-11010	330009
94750-11102	330009
94750-11110	330009
94750-21000	330009
94750-21010	330009
94750-21020	330009
94750-21030	330009
94750-29000	330023
94750-31000	330020
94750-32800	330672
94750-35010	330020
94750-35020	330020
94750-35030	330020
94750-37000	330566
94750-39800	330673
97724-43020	330679
97724-47000	330680
V10-99-0001	330546

ISUZU

5-86004-751-0	330193
5-86004-752-0	330193
5-86202-831-0	330007

Original equipment numbers and pictures in this catalogue are used for reference purposes only.

Original equipment numbers and pictures in this catalogue are used for reference purposes only.

5-86202-839-0	330193
8-12191170-0	330107
8-15404280-0	330107
8-90336-039-0	330360
8-94109-863-0	330701
8-94118-755-0	330007
8-94247-437-1	330100
8-94312-940-0	330007
8-97028-167-0	330259
9-82720-209-2	330008

IVECO

3435124	330371
4067916	330032
4165210	330062
4173783	330522
4181980	330516
4191001	330475
42047142	330444
42047167	330453
4700385	330516
4746581	330615
4746909	330690
4846676	330501
4856030	330614
4859914	330340
500 382 599	330137
500365771	330618
504156184	330032
5972332	330116
93190310	330446
93192483	330443
98424793	330116

JAEGER

50060	330691

JAGUAR

C2C 18352	330734
C2S 22710	330611
C2S 44687	330580
C2S 44687	330604
C2S 44974	330597
C2S 45412	330580
C2S 45412	330604
C2S 46706	330734
C42200	330013
DAC 4737	330121
EAC 2510	330169
EAC 5713	330133
LHE 1600AA	330530
LRA 1600BA	330640

KHD

117 8933	330004
1175755	330329
1179547	330354
419 0850	330505
4199333	330115
KK150 18501 C	330008

KIA

0B001-66-490B	330039
0K011 18 840	330655
0K201-18-840	330620
0K201-18-840A	330620
0K20C-66-490A	330701
0K50F-18-840	330635
0K737-18-840	330116
0K900-18-501C	330015
0K901-18-501	330015
0K95B 18 840	330655
0N350 18 840	330192
0PN11-18-840	330671
25360 37250	330667
25360-M2000	330674
25361-M2000	330676
39220 2X100	330581
39220-02500	330582
39220-38010	330664
39230-26600	330574
39230-26700	330632
46386-22600	330666
93810 3E000	330701
93860 39003	330569
94750 37000	330566
94750-39800	330673
AA100-18-501B	330672
DX5066490	330039
K201 18 840	330195
K8574 18 840	330583
KK150-18-501C	330008
KK150-18-501D	330008
KK150-18-510A	330095
KK150-18-510B	330095
KK370 18510	330100
KKY01-66-490	330039
MDX50-66-490	330039

LADA

2101-3808600	330082
2101-38103-00	330000
2101-38106-00	330000
2103-3808800	330291
2108-3710410	330627
210838280100	330303
2112-3851010	330626
2121-3710180	330628

LAND ROVER

13H 3735L	330041
4323633	330144
4337456	330144
560864	330041
AMR 2010	330433
MEK 000030L	330643
MEK 100170L	330643
MEK 105210	330683
MEK 500130	330643
MEK100060L	330530
NSC 000100	330683
NSC 100870L	330643
NUC 10003	330019
NUC000040	330356
NUC100280L	330356
PRC 2911	330464
PRC 6387	330024
PRC 9915	330433
PRC3359	330184
PRC3366	330168
PRC3505	330168
PRC3541	330172
PRC4044	330024
RTC3651	330013
STC2252	330356
STC2253	330097
XKB100080	330429

LIEBHERR

5029211	330471
6060084	330474

LOMBARDINI

107 6745 050	330001

MAGNETI MARELLI

111040216901	330560
116459249903	330690
171925011030	330120
171925011060	330560
171925011080	330559
215810021002	330120
510033634401	330110
510040224001	330559
510040224603	330561
511040224602	330142
511040238601	330495
SZA 002	330110
SZA106	330560
SZA108	330559
WTS05	330120
WTS09	330124

MAN

51 27430 00 07	330362
79 10071 00 36	330418
81 25505 0461	330444
81 25505 0636	330446
81 25505 0808	330474
81 25507 0015	330439
81 25520 00 43	330374
81 25520 00 58	330422
81 25520 0050	330446
81 25520 0078	330453
81 25521 60 17	330372

MASSEY FERGUSON

1877721 M92	330352
3380073 M01	330036
3381386 M1	330391
3381387 M3	330378

MAZDA

0 118 18 510	330087
0 118 89 181	330087
0 27Z 108 84A	330087
0 866 18 501A	330008
1 345 18 501	330009
1 E00 18 501	330005
1 E00 18 501 A	330005
1 E00 18 510	330144
1 E03 18 760	330131
1 E03 66 490	330042
1 E04 17 640	330263
1 E04 18 760	330125
1 E04 18 760	330613
1 E04 18 760A	330125
1 E05 17 640	330263
1 E07 18 760	330131
2 691 18 501A	330008
8 574-18-840	330135
A C04 17 640	330747
A C05 17 640A	330746
A J03 18 501	330623
B 001 66 490	330039
B 002 66 490	330039

ERA S.p.A. Moncalieri (TO) Italy - tel: +39 011 6891511 - fax: +39 011 6472862 - www.eranet.it

Tavole Comparative - Cross Reference List

B 303 18 840	330176
B 366 18 501	330009
B 367 18 501	330009
B 3C8 18 840	330130
B 541 18 51X	330100
B 593 18 840 A	330130
B 62K 18 840A	330589
B 6S7 18 840	330195
B R1A 66 470	330734
B R1A 66 490	330597
C201 18140 Z01	330144
E 301 18 840 A	330176
E 5D3 18 501	330008
F 8B8 18 840	330176
F 8B8 18 840A	330176
F EJK 18 501	330008
F S11 18 501 A	330015
F S11 18 50X	330015
FSB9-18-840	330640
J C01 17 640	330611
J E48 18 501 A	330015
K L01 18 51X	330100
KK150 18501 D	330008
KK150-18501	330008
LF01-18-840	330640
N 391 18 840	330130
N F02 18 840	330130
N350-18-840	330192
U H71 66 490	330039
Y 702 18 840	330130
Y F09 18 501	330028
Z ZM1-18-707	330144
Z ZT1 18 501	330623

MERCEDES-BENZ

000 542 51 18	330647
000 545 35 09	330053
000 545 42 14	330446
000 545 53 09	330426
000 545 68 09	330426
000 545 77 09	330058
000 545 86 09	330058
000 545 87 09	330053
000 545 99 09	330058
000 763 20 10	330376
000 763 26 10	330375
000 763 29 10	330377
000 763 32 10	330390
000 905 07 00	330647
001 545 01 09	330058
001 545 07 09	330042
001 545 20 09	330739
001 545 31 09	330532
001 545 38 09	330739
001 545 44 09	330737
001 545 63 09	330724
001 545 64 09	330532
001 545 67 09	330737
001 545 68 14	330470
001 545 87 09	330739
002 542 07 18	330286
002 542 25 17	330104
002 545 79 34	330184
003 545 20 14	330388
003 545 45 14	330456
004 545 21 14	330727
004 545 26 14	330012
004 545 44 14	330420
004 545 54 14	330487
004 545 55 14	330499
005 542 10 17	330104
005 542 26 17	330104
005 545 03 24	330118
006 545 10 14	330727
006 545 15 24	330190
006 545 40 24	330190
006 545 42 24	330216
006 545 91 24	330149
008 542 32 17	330334
008 542 45 17	330333
013 542 05 17	330322
013 542 06 17	330342
013 542 78 17	330546
124 820 83 10	330421
140 545 04 14	330246
168 545 00 14	330504
201 545 00 14	330246
661 542 30 17	330104
A 124 820 83 10	330421

MINI

13 62 7 535 068	330552

MITSUBISHI

8614A111	330738
AW311467	330116
M474114	330248
M809548	330139
M810074	330153
M851148	330021
M882369	330018
M883623	330692
MA603427	330093
MB229024	330081
MB435457	330039
MB487644	330701
MB596608	330701
MB660663	330191
MB845063	330191
MB953385	330055
MC850107	330087
MD001380	330093
MD001482	330009
MD001483	330009
MD017430	330009
MD021566	330009
MD021567	330009
MD091056	330100
MD138993	330009
MD138994	330020
MD149338	330642
MD177572	330619
MD182467	330619
MD355645	330015
MD603427	330093
MD730979	330247
MN163743	330539
MN960160	330647
MN980152	330546
MN980264	330546
MR977585	330717
MR985034	330619
MW30899625	330248

NEW HOLLAND

5109221	330616

NISSAN

11023-V700	330691
21595-Q9025	330177
22630-00Q0F	330558
22630-00Q0K	330558
22630-00Q1D	330630
22630-00QAB	330138
22630-00QAD	330692
22630-00QAF	330692
22630-10G00	330691
22630-51E02	330655
22630-51E10	330655
22630-70J00	330653
22630-BN702	330692
22630-D5900	330655
22630-G2402	330691
22630-G2404	330691
22630-N4200	330691
25080-1F600	330134
25080-70J00	330112
25080-89903	330098
25080-F3900	330098
25240-00Q0A	330698
25240-00Q0B	330630
25240-00Q0H	330698
25240-00QAA	330027
25240-00QAB	330630
25240-00QAD	330027
25240-00QAG	330697
25240-00QAH	330698
25240-4M400	330697
25240-4M40E	330697
25240-6F900	330023
25240-6F901	330026
25240-70J00	330359
25240-89900	330007
25240-89901	330007
25240-89902	330007
25240-89910	330007
25240-89911	330009
25240-89915	330359
25240-89920	330359
25240-89960	330359
25240-AW300	330630
25240-BN700	330027
25240-D9700	330007
25240-G2400	330359
25240-T5500	330006
25240-Y9501	330007
25240-Y9700	330007
25310-4A00B	330745
25320-00QAA	330510
25320-00QAB	330707
25320-00QAC	330708
25320-00QAD	330717
25320-00QAE	330728
25320-01B00	330044
25320-0B000	330044
25320-0T000	330044
25320-21P00	330044
25320-4M400	330711
25320-4M40A	330711
25320-70J00	330533
25320-75A00	330044
25320-AX000	330719
25320-AX00A	330719
25320-AX00B	330719
25320-AX00C	330719
25320-AX00E	330719
25320-JN00A	330719
25320-WL000	330719
32005-00QAA	330248
32005-00QAD	330543
32005-00QAE	330543
32005-00QAEKT	330543

Original equipment numbers and pictures in this catalogue are used for reference purposes only.

Original equipment numbers and pictures in this catalogue are used for reference purposes only.

32005-51A00	330254
32005-51A10	330254
32005-51A20	330254
32005-6F900	330249
32005-6F901	330513
32005-6J000	330746
32005-6J001	330746
32005-6J00A	330746
32005-70E00	330257
32005-70E10	330257
32005-70E12	330257
32005-70E20	330257
32005-95F0A	330746
32005-AX000	330543
32006-00QAA	330750
32006-95F0A	330747
32006-D1206	330254

OPEL

03 439 088	330085
08 954 566	330011
09 109 724	330037
09 109 810	330132
09 110 231	330018
09 110 309	330181
09149765	330068
09175185	330529
12 146 897	330107
12 191 170	330107
12 36 302	330117
12 39 260	330235
12 39 266	330244
12 39 267	330252
12 39 271	330244
12 39 427	330431
12 39 431	330431
12 39 433	330429
12 39 435	330065
12 39 443	330065
12 39 448	330712
12 39 449	330529
12 40 008	330080
12 40 017	330529
12 40 552	330044
12 40 554	330701
12 40 590	330034
12 40 591	330429
12 40 592	330434
12 40 593	330435
12 40 594	330057
12 40 595	330057
12 40 596	330436
12 40 597	330068
12 40 598	330433
12 40 701	330529
12 42 569	330085
12 52 506	330011
12 52 552	330356
12 52 555	330366
12 52 560	330016
12 52 561	330007
12 52 562	330364
12 52 565	330007
12 52 566	330360
12 52 567	330008
12 52 569	330356
12 52 570	330363
12 52 572	330365
12 52 573	330366
12 566 778	330137
12 992 783	330509
13 38 040	330142
13 38 441	330107
13 38 444	330116
13 38 448	330085
13 38 450	330117
13 38 452	330133
13 38 457	330133
13 38 467	330137
13 38 477	330107
13 38 504	330304
13 38 511	330137
13 41 002	330168
13 41 003	330172
13 41 007	330168
13 41 009	330210
13 41 011	330277
13 41 014	330310
13 41 018	330276
13 41 020	330304
13 41 021	330179
13 41 022	330305
13 41 023	330301
13 41 024	330306
13 41 025	330299
13 41 026	330300
13 41 027	330299
13 41 027	330302
13 41 028	330178
13 41 030	330298
13 41 031	330642
13 41 033	330218
13 41 038	330642
13 41 039	330217
13 41 039	330300
13 41 042	330226
13 41 043	330227
13 41 044	330217
13 41 045	330198
13 41 047	330277
13 41 856	330107
13 42 561	330085
13 42 568	330085
13 42 569	330126
13 42 570	330509
13 42 571	330509
13 42 850	330120
13 42 855	330528
15 326 388	330107
18 46 201	330225
18 46 325	330220
18 46 326	330223
24 461 314	330537
24 461 315	330538
44 00 194	330027
44 01 661	330139
44 01 724	330037
44 01 810	330132
44 02 231	330018
44 02 298	330153
44 02 309	330181
44 02 578	330692
44 05 731	330055
44 08 333	330138
44 08 512	330708
44 10 080	330248
44 10 676	330630
44 14 063	330707
44 14 385	330248
44 14 818	330728
44 15 207	330697
44 15 882	330510
44 19 587	330730
44 19 589	330729
44 21 512	330750
44 30 825	330543
44 31 212	330698
44 31 529	330558
44 33 120	330558
44 33 805	330698
44 33 880	330630
45 00 001	330120
45 00 684	330707
45 00 733	330311
45 00 754	330219
47 00 385	330745
47 06 296	330741
47 10 280	330723
48 00 391	330066
55 202 374	330340
55 354 325	330366
62 38 236	330117
62 38 266	330137
62 39 120	330720
62 40 058	330548
62 40 156	330068
62 40 157	330548
62 40 180	330721
62 40 187	330720
62 40 261	330537
62 40 262	330538
62 40 328	330721
62 40 462	330721
63 38 023	330142
63 38 038	330142
8 50 413	330107
9 132 299	330080
9 197 391	330066
90 018 835	330116
90 069 100	330235
90 080 939	330116
90 087 398	330172
90 108 636	330168
90 161 033	330311
90 196 375	330429
90 240 259	330016
90 242 277	330277
90 243 815	330434
90 244 648	330434
90 245 033	330244
90 246 852	330085
90 247 345	330210
90 307 473	330436
90 336 039	330364
90 336 458	330310
90 336 709	330304
90 337 607	330435
90 337 836	330360
90 339 408	330299
90 339 409	330300
90 339 500	330301
90 340 497	330276
90 341 759	330218
90 355 743	330304
90 355 879	330299
90 355 879	330302
90 355 880	330217
90 355 880	330300
90 355 907	330057
90 355 936	330305
90 355 937	330306
90 357 303	330178
90 357 304	330223
90 376 209	330220
90 410 792	330116

ERA S.p.A. Moncalieri (TO) Italy - tel: +39 011 6891511 - fax: +39 011 6472862 - www.eranet.it

90 410 793	330133
90 449 435	330298
90 458 542	330433
90 458 543	330431
90 482 428	330225
90 482 454	330244
90 492 444	330431
90 494 519	330065
90 504 499	330429
90 506 496	330277
90 506 498	330226
90 506 499	330227
90 507 539	330363
90 508 084	330198
90 510 182	330133
90 510 850	330126
90 530 444	330509
90 534 902	330366
90 541 937	330137
90 569 684	330365
90 569 685	330065
90 573 077	330528
90337100	330252
91 08 194	330027
91 112 377	330009
91 151 202	330217
91 159 949	330138
91 61 054	330219
9109661	330139
9110298	330153
92 029 764	330126
93 161 462	330543
93 174 208	330137
93 177 344	330142
93 184 155	330142
93 198 034	330558
93 203 244	330085
93 358 883	330116
94 021 127	330008
94 118 754	330044
94 362 930	330044
94 472 002	330085
94 845 488	330008
94 847 544	330008
94 851 293	330008
97 036 606	330642
97 069 786	330642

PIAGGIO

287887	330001

PORSCHE

911 606 230 00	330358
911 613 571 01	330358
928 606 126 00	330133
944 606 125 00	330116
955 106 125 00	330546
955 106 125 01	330546
955 613 110 31	330503
955 613 110 32	330503
986 606 203 00	330011
997 606 410 00	330546

RENAULT

25 24 04M 40E	330697
25 32 04M 400	330711
25 32 500 06R	330729
25 32 500 07R	330728
32 00 549 13R	330750
32 00 56J 000	330746
32 00 56J 00A	330746
32 00 66J 000	330747
32 00 66J 00A	330747
32 00 66J 00B	330747
50 10 412 450	330137
60 00 001 355	330531
60 01 023 839	330270
60 01 055 056	330017
60 01 545 356	330692
74 39 186 486	330108
77 00 101 968	330138
77 00 105 087	330692
77 00 110 664	330558
77 00 113 867	330138
77 00 267 388	330116
77 00 268 534	330173
77 00 268 709	330173
77 00 410 418	330069
77 00 414 986	330707
77 00 414 988	330510
77 00 417 970	330027
77 00 422 630	330248
77 00 431 512	330708
77 00 434 561	330717
77 00 503 200	330531
77 00 511 899	330035
77 00 517 549	330237
77 00 544 807	330035
77 00 562 527	330035
77 00 582 688	330691
77 00 618 658	330169
77 00 622 019	330169
77 00 655 787	330003
77 00 700 414	330037
77 00 732 503	330037
77 00 732 506	330236
77 00 737 571	330132
77 00 743 684	330651
77 00 748 169	330292
77 00 755 595	330466
77 00 758 464	330466
77 00 759 441	330169
77 00 759 990	330054
77 00 761 254	330003
77 00 762 217	330070
77 00 771 821	330536
77 00 771 825	330018
77 00 771 828	330017
77 00 777 660	330018
77 00 777 683	330209
77 00 778 780	330248
77 00 778 781	330253
77 00 782 503	330181
77 00 785 258	330055
77 00 786 467	330466
77 00 791 178	330067
77 00 796 048	330181
77 00 798 264	330214
77 00 802 640	330248
77 00 805 271	330313
77 00 808 951	330316
77 00 809 773	330278
77 00 809 907	330557
77 00 809 909	330536
77 00 810 879	330146
77 00 810 880	330313
77 00 811 340	330069
77 00 819 641	330311
77 00 829 427	330153
77 00 834 918	330021
77 00 839 072	330219
77 00 844 331	330076
77 00 845 214	330021
77 00 849 783	330073
77 00 849 824	330075
77 00 865 290	330139
77 00 869 343	330132
77 01 036 113	330219
77 01 038 848	330224
77 01 039 667	330018
77 01 059 974	330697
77 01 348 032	330003
77 01 348 033	330003
77 01 348 143	330084
77 01 348 194	330167
77 01 348 699	330237
77 01 348 716	330236
77 01 348 722	330035
77 01 348 765	330169
77 01 349 086	330531
77 01 349 273	330037
77 01 349 694	330169
77 01 365 429	330003
7700782694	330209
79 10 245 551	330084
79 10 245 553	330084
82 00 008 194	330543
82 00 026 650	330630
82 00 110 894	330708
82 00 110 895	330717
82 00 168 238	330730
82 00 168 239	330729
82 00 168 240	330728
82 00 177 718	330543
82 00 209 496	330750
82 00 276 359	330729
82 00 276 360	330728
82 00 276 361	330731
82 00 359 627	330698
82 00 359 633	330699
82 00 561 449	330138
82 00 650 777	330558
82 00 670 467	330698
82 00 670 483	330630
82 00 671 271	330578
82 00 671 272	330698
82 00 671 274	330577
82 00 671 275	330699
82 00 671 279	330630
82 00 671 285	330018
82 00 671 286	330027
82 00 702 976	330138
82 00 771 472	330750
96 23 870 180	330657

ROVER

623050	330094
BAU 2445	330233
BHM 7282	330177
BHM 7367	330177
CDU 1490	330187
CDU 1500	330177
EDU1256	330095
ERR 2081	330116
GPS 135	330019
GPS 138	330010
GPS101	330013
GPS126	330013
GPS128	330007
GPS131	330013
GPS133	330013
GPS137	330317
GPS160	330007

Original equipment numbers and pictures in this catalogue are used for reference purposes only.

Original equipment numbers and pictures in this catalogue are used for reference purposes only.

GPS182	330007
GTR 179	330111
GTR 274	330193
GTR101	330094
GTR120	330096
GTR184	330095
GTR199	330096
GTR206	330530
GVS 104	330177
GVS 105	330187
GVS 123	330196
GVS 125	330177
KTP 9017	330177
KTP 9940	330196
NUC 10008	330010
NUC100350	330356
PEJ 10003	330196
PEJ 10007	330147
PEJ 100110	330193
PEJ 100120	330193
PEL100230	330095
UMB 000020	330263
UMB 100090	330244
UMB 1003	330442
UMB10001	330249
UMB100050	330249
XKB10001	330061
XKB10003	330061
YCB 10004	330111

SAAB

34 39 088	330126
4086682	330213
4086708	330291
4086724	330184
4232666	330244
4233342	330434
4617668	330244
47 72 216	330126
55 701 396	330720
59 51 421	330007
7334642	330426
75 22 402	330003
75 63 562	330121
8350571	330013
8533226	330166
8547572	330291
8561367	330166
8569238	330166
8572331	330184
8577702	330034
8577736	330034
87 88 200	330133
88 00 914	330089
88 59 233	330089
90569684	330365
91 08 291	330089
91 09 182	330003
91 12 459	330003
91 85 906	330721
91 85 907	330720
9357021	330116
95 43 802	330126
9505462	330047
9509480	330239
9526518	330166
9526526	330184
9552878	330184
9567967	330213

SAME

2 7099 360 0	330344
2 7099 400 10	330350
FM 11717	330350

SCANIA

1303471	330446
1472738	330489
1472739	330461
304836	330445
314572	330447
343795	330446
370710	330446

SEAT

1H0 927 189 C	330705
1H0 927 189 D	330706
3934555	330335
3934556	330335
4415441	330335
4418599	330335
4443505	330335
HB-952500.00	330335
HB-952500.01	330335
HB-952500.02	330335
RF-952000.00	330335
RF-952000.01	330335

SIEMENS VDO

323 804 004 004 D	330092

SKODA

004 435 010	330691
047 919 081 B	330696

SMART

0003118V00200000	330647
454 545 03 14	330717

SSANGYONG

8571005020X	330701

SUBARU

22630-AA040	330638
22630-AA041	330638
25080-89903	330098
25240-89915	330359
25240-89920	330359
25240-89960	330359
25240-KA020	330015
25240-KA040	330015
25240-KA080	330015
83311-AA010	330044
83311-AA011	330044

SUZUKI

13650 79J50 000	330142
13650 84E50 000	330142
13650 84E51 000	330142
13650-51G10	330130
13650-57F00	330130
13650-61B00	330130
13650-64B00	330654
13650-67JG0	330558
13650-78E00	330130
13650-84101	330135
13650-84CT0-000	330692
13651-86CA0	330639
13655-66G00	330556
13660-84A00-000	330692
16582-66G00	330023
17680-78000	330174
34850-50A00	330099
34850-65011	330087
34850-65020	330087
34850-65021	330087
34850-78E21	330087
34850-82000	330099
34850-82001	330099
34850-82002	330099
34850-82011	330100
34850-82012	330100
34850-86CB0	330575
35331-86CA0	330180
35331-86CB0	330180
37610-73J01-000	330681
37610-73J03-000	330681
37610-76G10-000	330745
37620 30B3	330115
37740-60A00	330081
37740-60D00	330081
37740-60D01	330081
37740-60D10	330081
37740-73H10-000	330723
37740-75H10-000	330723
37740-80G10-000	330741
37740-83E00-000	330720
37820-67J01-000	330698
37820-73000	330009
37820-77E90	330008
37820-79600	330009
37820-82000	330009
37820-82001	330006
37820-84A00-000	330630
37820-86CA0	330023

TOYOTA

83420-16010	330093
83420-16020	330100
83420-16030	330100
83420-20010	330093
83420-20020	330093
83530 02040	330026
83530-01040	330008
83530-02030	330015
83530-05010	330022
83530-10010	330009
83530-10020	330009
83530-12010	330009
83530-12020	330009
83530-12040	330006
83530-12040	330015
83530-14010	330009
83530-14020	330015
83530-14030	330009
83530-14040	330006
83530-14040	330015
83530-14050	330015
83530-14060	330022
83530-14070	330022
83530-28010	330022
83530-28020	330022
83530-28030	330009
83530-30010	330008
83530-30030	330009
83530-30040	330008
83530-30042	330008
83530-30050	330008
83530-30051	330008

ERA S.p.A. Moncalieri (TO) Italy - tel: +39 011 6891511 - fax: +39 011 6472862 - www.eranet.it

83530-30060	330008
83530-30080	330006
83530-30080	330015
83530-30090	330022
83530-30100	330022
83530-36010	330008
83530-36011	330008
83530-60010	330022
83530-60020	330022
83530-60030	330008
83530-60040	330015
83530-60050	330008
83530-AA011	330022
84210-04010	330743
84210-0K010	330743
84210-12040	330743
84210-52010	330749
84222-12010	330743
84340 01010	330039
84340 12020	330040
84340 20011	330040
84340 22040	330040
84340 22060	330040
84340 22071	330040
84340 22072	330040
84340 32030	330039
84340 32030	330081
84340 32050	330059
84340 32090	330059
84340 35010	330040
84340 35020	330059
84340 36030	330040
84340 42010	330059
84340-06010	330703
84340-09020	330723
84340-09040	330723
84340-19025	330723
84340-20060	330703
84340-32070	330703
84340-32110	330703
84340-35030	330703
84340-42020	330703
84340-47020	330703
84340-49025	330723
84340-49045	330723
84340-50020	330703
84340-69015	330723
84340-69025	330723
84340-69075	330738
84540-17010	330752
84540-70020	330752
89422 02020	330624
89422 20010	330130
89422 35010	330130
89422-12010	330135
89422-30020	330135
SU001 00639	330502
SU001-00467	330681

TRW

600577	330615
602124	330614
602580	330616
603319	330617

VALEO

09530019960AM	330122
09580019961AM	330557
336344016AM	330110
336401056AM	330554
336401056PS	330554
336401116AM	330154
337182016AM	330023
337351086AM	330556
401044016AM	330575
401264016AM	330576
401742016AM	330022
401930016AM	330555
401976016AM	330124
402169016AM	330560
402175015	330120
402236026AM	330551
402240016AM	330559
402246036AM	330561
402386016AM	330495
402754016AM	330142
402754026AM	330553
402811016AM	330558
402824016AM	330552
402960026AM	330577
402960046AM	330578
402968016RS	330138
6596409961AM	330082
700015	330122
700021	330120
700025	330636
819743	330296
819745	330181
819747	330271
819749	330292
819751	330180
819752	330188
819753	330194
819754	330215
819755	330272
819756	330270
819757	330167
819758	330266
819760	330172
819762	330484
819770	330203
819772	330267
819773	330207
819773	330293
819774	330179
819774	330273
819775	330202
819781	330209
819784	330182
819785	330185
819786	330183
819826	330275
819827	330279
819828	330201
819829	330276
819830	330277
820031	330228
820031	330295
820033	330214
820034	330199
820034	330282
820035	330230
820035	330280
820036	330299
820036	330302
820037	330217
820037	330300
820038	330298
820038	330301
820207	330190
820208	330213
820215	330278
820216	330229
820219	330306
820220	330208
820224	330283
820225	330281
820227	330225
820238	330174
820242	330178
820243	330227
820303	330222
820305	330231
820307	330305
820308	330218
820311	330220
820314	330294
820324	330304
820336	330633
820337	330634
V08-04	330142
V08-05	330495
V08-06	330553
V08-07	330559
V08-08	330560
V08-09	330561
V08-10	330082
V08-102	330557
V08-104	330022
V08-11	330120
V08-12	330124
V08-13	330555
V08-28	330023
V08-32	330552
V08-34	330551
V08-36	330110
V08-38	330551
V08-68	330154
V08-69	330575
V08-70	330554
V08-71	330556
V08-72	330576
V08-83	330577
V08-86	330578
V08-88	330138
V08-89	330558

VAUXHALL

90569684	330365

VOLVO

1078493	330463
1087960	330402
1087961	330403
1087962	330404
1087963	330405
1087964	330406
1087965	330392
1087965	330407
1087967	330393
1087967	330408
1218360	330685
1257137	330004
1257216	330284
1266085	330352
1266085-8	330352
1307086	330240
1307086-7	330240
1324496	330454
1324750	330352
1324750-7	330352
1332396	330116
1346030-8	330133
1347003	330351

Original equipment numbers and pictures in this catalogue are used for reference purposes only.

Original equipment numbers and pictures in this catalogue are used for reference purposes only.

1347003-4	330351
1362645	330105
1362645-2	330105
1501091	330415
1606877	330352
1606877-7	330352
1609395	330355
1622986	330382
20382500	330401
20382504	330373
20382505	330402
20382506	330403
20382507	330404
20382508	330405
20382509	330406
20382510	330407
20382511	330408
20382514	330411
20382517	330476
20382518	330412
20424051	330396
20424055	330506
20424056	330398
20424060	330400
20424066	330488
272484	330351
29 90 857	330086
30658181	330640
30711661	330144
30711661-A	330144
30729812	330603
30752408	330726
30773748	330733
30773935	330597
30773936	330734
30774465	330611
30774466	330580
30774466	330604
30777334	330640
30809548	330139
30810074-2	330153
30853464	330477
30862221	330658
30870941-9	330055
30874168	330247
30874172	330130
30874182	330619
30882369	330018
30883623	330692
30899625	330248
31 97 870	330467
3181941	330460
3197873	330459
3211204 7	330186

3286641 0	330189
3292319-5	330686
3342004-3	330003
3343237-8	330017
3343427-5	330018
3344169	330132
3345511	330132
3412682	330042
3416584	330175
3433477-1	330133
3447882-6	330651
34489161	330631
34512160	330631
3455171-3	330315
3457808-8	330312
3467590-0	330315
3474114-0	330248
3517501-7	330284
3544691-3	330426
3545031-1	330108
3545316-6	330351
3545696-1	330351
39 63 472	330397
39 63 475	330506
39 63 479	330399
3963486	330488
460191	330092
679364-0	330426
70808951-1	330316
81 51 889	330395
863169	330381
8691591	330740
8691593	330726
91 65 989	330386
91 65 990	330385
9128771-4	330630
9186008	330652
9186134	330342
9186486-8	330108
9442728	330240

VW

0003954674	330056
0004318331	330291
002 945 415	330265
002 945 415 D	330511
004 433 017	330269
005 566 119	330442
00A 919 081	330012
012 919 823 F	330753
014 919 361	330234

01E 941 521	330249
01E 941 521 A	330748
01E 941 521 B	330748
020 941 521 A	330233
020 945 415 A	330442
021 919 081	330317
021 919 081 A	330317
021 919 081 B	330317
021 919 081 C	330004
021 952 600 B	330534
025 906 041	330116
025 906 041 A	330286
026 906 161	330116
026 906 161	330127
026 906 161 2	330136
027 919 081 1	330695
027 919 501	330284
028 919 081 A	330368
028 919 081 D	330342
028 919 081 E	330318
028 919 081 G	330318
028 919 081 J	330318
02A 945 413	330744
02A 945 413 B	330744
02A 945 413 C	330744
02K 945 415	330261
02K 945 415 C	330264
02K 945 415 D	330264
02K 945 415 E	330264
02T 945 415	330579
02T 945 415 D	330579
02T 945 415 E	330579
02T 945 415 K	330579
02T 945 415 L	330579
02T 945 415 P	330579
02T 945 415 Q	330579
030 919 081 1	330695
030919081B	330319
034 906 161	330136
034 919 369 A	330159
035 919 369 C	330285
035 919 369 M	330115
035 919 369 S	330309
035 919 521 A	330157
036 919 081 A	330320
036 919 081 B	330320
036 919 081 C	330320
037 919 081 B	330326
037 919 081 C	330326
037 919 081 E	330326
038 919 081	330325
038 919 081 A	330341
038 919 081 B	330321
038 919 081 C	330325

038 919 081 D	330325
038 919 081 F	330321
038 919 081 G	330541
047 919 081	330025
047 919 081 A	330367
049 919 501	330284
049 919 563 B	330687
053 919 369 A	330309
053 919 501 A	330150
053 919 521	330308
054 919 369 B	330309
056 919 081 B	330004
056 919 081 C	330004
056 919 081 E	330337
058 919 501 A	330636
059 919 501	330497
059 919 501 A	330496
059 919 563	330644
062 919 081	330000
068 919 081	330322
068 919 081 A	330341
06A 919 081	330321
06A 919 081 A	330324
06A 919 081 B	330326
06A 919 081 C	330320
06A 919 081 D	330324
06A 919 081 E	330324
06A 919 081 J	330324
06A 919 501	330546
06A 919 501 A	330546
078 919 501 B	330497
078 919 501 C	330141
084 941 521	330234
084 941 521 A	330448
084 945 415	330255
085 941 521	330233
110 094 203	330368
113 095 070	330172
113 095 073	330172
113 945 515 G	330414
113 945 515 H	330063
114 095 070	330172
115 094 200	330368
115 094 201	330025
115 094 202	330025
115 095 070	330170
115 939 031	330238
171 919 521 F	330157
171919829A	330323
175 919 501	330284
175 959 481	330172
191 919 369 A	330161
191 919 521	330307
191 919 521 A	330307

ERA S.p.A. Moncalieri (TO) Italy - tel: +39 011 6891511 - fax: +39 011 6472862 - www.eranet.it

191 919 521 B	330308
191 919 521 D	330646
191 945 515	330440
191 945 515 A	330440
191 945 515 B	330440
191 959 481	330296
191 959 481 B	330296
191 959 481 C	330268
1C0 945 511 A	330544
1H0 919 563	330123
1H0 927 189 A	330706
1H0 927 189 C	330705
1H0 927 189 D	330706
1H0 959 481	330281
1H0 959 481 B	330280
1J0 927 189	330725
1J0 927 189 B	330710
1J0 927 189 C	330710
1J0 927 189 E	330725
1J0 927 189 F	330725
1J0 945 511	330503
1J0 945 511 A	330503
1J0 945 511 B	330503
1J0 945 511 C	330503
1J0 945 511 D	330503
1J0 945 511 E	330503
1J0 945 511 F	330503
1J0 959 481	330199
1J0 959 481 A	330230
1K2 945 511	330545
251 919 369 B	330162
251 919 501	330114
251 919 501 A	330103
251 919 501 D	330103
251 941 521	330234
251 959 481 C	330204
251 959 481 D	330204
251 959 481 G	330212
251 959 481 K	330212
2D0 919 501 C	330104
2E0 907 457	330727
2E0 907 457 A	330727
2E0 945 515 A	330737
307 959 481 1	330296
312 939 030	330238
321 959 481 A	330268
321 959 481 C	330268
321 959 481 D	330268
321 959 481 E	330296
322 945 515	330045
323 959 481 B	330268
357 919 081	330370
357 919 369 E	330164
357 919 369 F	330163

357 919 501	330128
357 919 501 A	330287
357 919 501 B	330128
3949879	330083
443 945 515	330327
481 945 515	330426
4A0 945 515	330328
4A0 945 515 A	330328
547 945 515 A	330042
6K0 945 515	330440
6K0 945 515 A	330072
6Q0 927 189	330725
6Q0 945 511	330503
6U0 919 501	330116
6U0 919 501 B	330287
6U0 945 515	330032
6U0 959 481 E	330269
6X0 959 481	330199
701 919 369	330289
701 919 369 B	330151
701 919 369 C	330151
701 919 369 D	330152
701 919 369 E	330288
701 959 481	330283
701 959 481 A	330485
701 959 481 C	330222
7H0 927 189	330725
811 945 513	330038
811 959 481	330297
823 959 481 A	330166
823 959 481 F	330166
823 959 481 G	330172
823 959 481 K	330172
857 919 457 A	330419
857 919 457 B	330419
857 945 515	330038
857 945 515 A	330038
867 959 481	330282
893 959 481	330297
8A0 266 490 A	330549
8D0 959 481 B	330231
8E0 927 189 B	330725
J84 210 120 40	330743
J84 340 320 50	330059
SE 021 952 600 A	330175
SE 023952.510B	330056
SE 127952.000A	330032
SE 127952.600A	330291
SE 127952.600B	330165
SE 141947.000A	330156

ZASTAVA

1450292	330156

4209632	330338
46635308	330335

Original equipment numbers and pictures in this catalogue are used for reference purposes only.

ERA S.p.A. - April 2012